PORTABLE HOUSEHOLD ICE MAKER
USER'S MANUAL

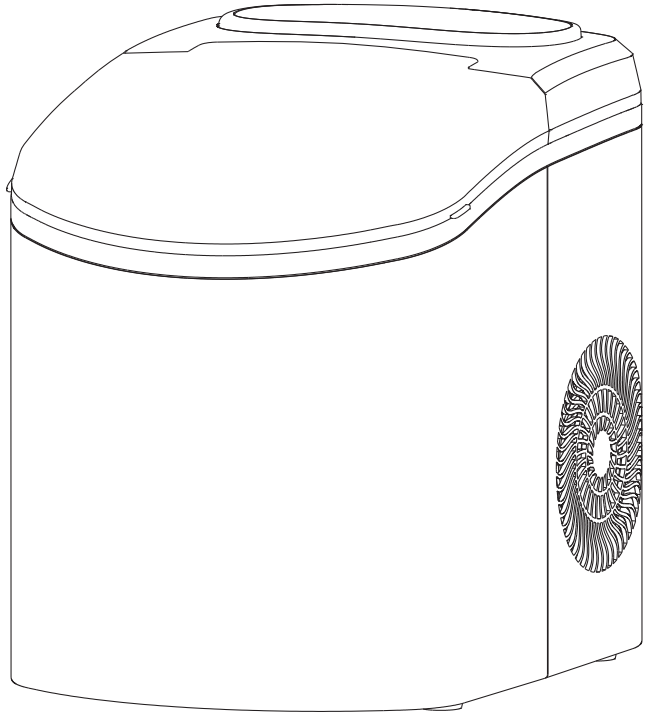

Thank you for choosing our ice maker. This user manual will provide you with valuable information necessary for the proper care and maintenance of your new product. Please take a few moments to thoroughly read the instructions and familiarize yourself with all the operational aspects of your new product.

INTRODUCTION

Please take a few minutes to read this manual carefully.

Proper maintenance and operation of this machine can provide better service.

TABLE OF CONTENTS

SECTION 1

SAFETY TIPS & WARNINGS PAGES 4-5

SECTION 2

ACCESSORIES PAGES 6
CONTROL PANEL PAGES 6
PANEL PROMPT LIGHT PAGES 7
ICE STORAGE CAPACITY PAGES 7

SECTION 3

ELECTRICAL REQUIREMENTS PAGES 8

SECTION 4

HOW TO INSTALLATION PAGES 8

SECTION 5

HOW TO OPERATION PAGES 9

SECTION 6

CLEANING AND MAINTENANCE PAGES 9-10
IF HAVE STRANGE SMELL PAGES 10

SECTION 7

HOW TO STORAGE PAGES 10

SECTION 8

TROUBLESHOOTING PAGES 11-12
SOUND DURING MACHINE OPERATION PAGES 12
WRANTY PAGES 12

SECTION 9

TECHNICAL PARAMETER PAGES 13

⚠ SAFETY TIPS AND WARNINGS

(1). Do not plug and unplug Machine with wet hands.
(2). Do not attempt to repair or replace any part of the ice machine unless Under manufacturer's guid, otherwise inspections should be performed under the direction of a technician.
(3). Use the machine in a well ventilated area with a temperature between 50℉ and 100℉.
(4). Do not install or operate the machine in a sealed space, such as a closed room.
(5). Install the machine away from the following factors, such as wind, rain, water mist or electromagnetic environment.
(6). Do not place it next to high temperature sources such as ovens and grills.
(7). The use of ice makers must comply with national and local standards.
(8). Do not squeeze or twist the power cord of the ice machine.
(9). In order for the machine to work properly, please lay it flat during use.
(10). Check if there is any water leakage after adding water to the ice machine.
(11). Children or people with mental disorders are not allowed to operate the ice machine.
(12). Although the machine has been tested and cleaned at the factory, due to long-term transportation and storage, please dump the ice cubes made in the first four cycles.
(13). If the machine has not been used for a long time, please clean it thoroughly before use. Please follow the instructions provided to clean and disinfect. Do not leave any solution after cleaning.
(14). This machine is suitable for household or similar purposes, such as family, bar, tea shop, KTV, coffee shop, etc. Do not use the machine beyond its intended use.
(15). If the service life is exceeded, please hand over the machine to the manufacturer, service agent or similar qualified organization.
(16). This machine can only be filled with drinking water.
(17). If the power cord is damaged, it must be replaced by a manufacturer, service agent or similar qualified person to avoid danger.

(18). This device may not be used by persons who have physical, sensory or mental abilities, or who lack experience and knowledge, including children, unless they are supervised or prompted by the person responsible for their safety.
(19). At least 150mm space is left around the ice machine to ensure free circulation of the cooling air.
(20). Do not use mechanical equipment or other means to accelerate the defrosting process except the method recommended by the manufacturer.
(21). Do not damage the ice machine refrigeration tube.
(22). Except for the type recommended by the manufacturer, the appliance shall not be used in the ice storage room of the appliance.
(23). It is forbidden to clean the ice machine with flammable liquid. Failure to do so may result in fire or explosion.
(24). It is forbidden to store explosives such as gasoline, combustion-supporting sprays or other flammable gases or liquids in this appliance.
(25). Under no circumstances should the ice machine be inclined more than 45 degrees.
(26). When the machine is working, it is strictly forbidden to touch the evaporator by hand.

ACCESSORIES

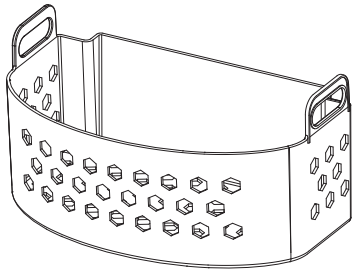

Ice Storage Basket

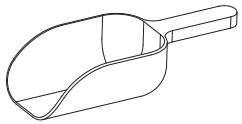

Ice Spoon

CONTROL PANEL

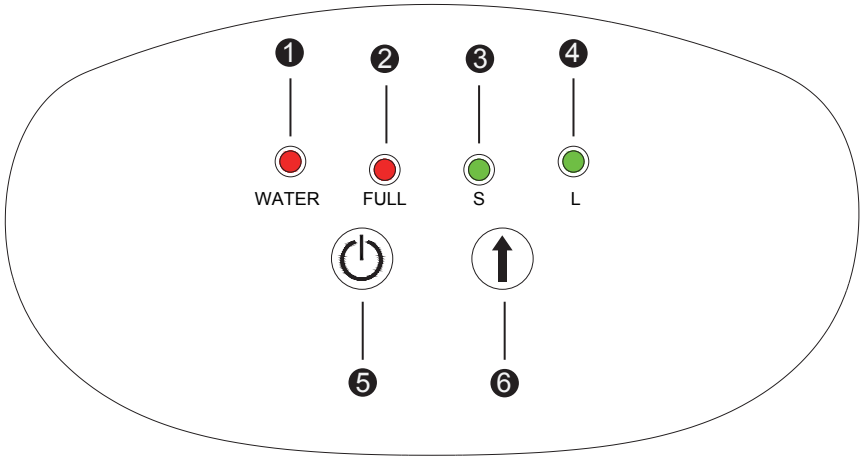

❶ — Add Water Indicator

❷ — Small Size Ice

❸ — Power On/Off

❹ — Ice Full Indicator

❺ — Big Size Ice

❻ — Switch Ice Size

PANEL PROMPT LIGHT

When the ice box is full, the ice full indicator on the display panel will light up (red), and the machine will stop automatically. When the ice is removed, the machine will back to work.

If water is insufficient, the add water indicator lights up (red) and the ice maker will stop working. After refilling, press the " ⏻ " to reboot.

If an error occurs, the ice full and add water indicator lights will flash simultaneously, and the ice maker will stop working. Please refer to the Problem Solution Page.

When you do not use the ice maker, please turn off the ice maker and unplug the power plug.

When entering the cleaning state, the large and small ice indicator green lights flash alternately, press the power button will be turn off.

When an ice jam fault alarm occurs, the water and full ice indicator red lights flash alternately, turn off the ice maker and wait for the ice cubes to melt automatically. Then restart it to start normally.

If the ice maker needs to be after unplug, please for at least 5 minutes to protect the compressor.

ICE STORAGE CAPACITY

* When the ice basket is full, the machine will stop automatically and stand by.
* The ice maker can partially block heat and store ice temporarily, but cannot be used as freezer.
* Please remove ice cubes as needed and add water to ensure machine works normally.

ELECTRICAL REQUIREMENTS

- Please read the safety precautions listed at the front of the instructions.
- This machine is recommended to use a dedicated line.
- Do not use a board that can be disconnected through a switch or ground.
- This machine must use a national standard three-pronged plug with a grounding. In order to reduce the potential for hidden contacts, the power cord must be plugged into the matching three-plug grounding type wall switch. Do not cut or move the grounding wire. If the matching wall switch cannot be used, consumers should ask a professional electrician to install the correct three-push switch.

HOW TO INSTALLATION

Connect the power cord. Please put the machine on for 24 hours to allow the refrigerant to settle. Unpack all packaging materials: foam, bags, tape, etc.

- The machine should be placed on a stable level to support the ice machine's weight of water or ice.
- This machine can be installed without any support and can be installed in any place that meets the conditions of use and power supply.
- Use a machine that is well ventilated and has a temperature between 50℉ and 100℉. Do not install or operate the machine in a sealed space, such as a closed room.
- Install the machine away from the following factors, such as wind, rain, water mist or electromagnetic environment.
- Do not place it next to high temperature sources such as ovens and grills.
- To ensure long-term use of the machine, use filtered or purified water; or use citric acid every other week to clean the outside of the machine and the dust deposits on the bottom of the tank.

HOW TO OPERATION

For the first time using an ice machine (or not used for a long time), it is recommended to discard the ice cubes made in the first 4 cycles to ensure that the machine is thoroughly cleaned.

1. Connect the ice machine's power cord to a grounded three-hole outlet.
2. Open the front cover, take out the ice basket, and pour the potable water into the water tank (Do not exceed the highest mark of the water level).
3. Put back the ice basket, the water level is below the bottom of the ice basket, close the front cover.
4. Touch the “⏻” button, the “Big Ice” indicator light will be on continuously, when the light stops flashing, the machine will start working.
5. Touch the “⏻” button to select the size of the ice block according to your needs (default Big ice)

CLEANING AND MAINTENANCE

Regular cleaning and correct maintenance will ensure the working efficiency, performance and prolong the working life of the ice maker.

* Cut off the power supply and pull out the plug before cleaning.
* Do not use solvent-based cleaning agents, which may damage the machine or the retention of harmful substances.
* Do not wash the machine, but wipe the outside of the machine with a wet cloth.
* Dry the inside and outside of the machine with a soft and clean cloth.
* Check regularly whether the drain plug is loose to prevent leakage.

Clean after first use or long-term placement:

* Disinfection solution: water and vinegar, or citric acid (ratio: 10:1)
* Wipe the interior with a solution, including the hand-touchable evaporator (icing column)

* Add ice-making water, run the ice maker and discard the ice cubes produced four times before. Then remove the remaining water from the drain and reinstall the drain plug to ensure that the plug is in place.
* Re-use clean, soft cloth to clean the remaining watermarks. Finish cleaning.

IF HAVE STRANGE SMELL

If the ice has a strange taste.If the ice has a disgusting or mildewy odor in the machine, use the above steps to clean the inside of the machine.

HOW TO STORAGE

If the ice maker is not used for a long time, cut off the power supply and remove the remaining water from the drainage outlet. Dry the interior with a clean soft cloth (refer to maintenance and cleaning)

Warning:

Don’t touch the power supply with wet hands !

Don’t pull out the machine by pulling the power cord !



This sign “” on the product or packaging indicates that the product cannot be treated as household waste. Should be delivered specific recycling points for electronic and electrical products. Proper handling of this product can help prevent environmental problems caused by improper handling of this product and harm to human health. If you need more details about recycling, please contact the office responsible for household waste disposal services or the manufacturer or purchase point that purchases our products.

TROUBLESHOOTING

If the machine breaks down, please wait for the machine to stop automatically. You can solve the problem by using the method in the table below. But don't disassemble, inspect or repair the machine without professional guidance.

Tip: After power-on, the water tank is turned over to deicing state, the ice display lamp flickers, and the machine enters standby state. Touch the “⏻”, then the ice display lights will continue to light, no longer flicker, the machine into normal working state.

This machine has self-checking function. If an error occurs, the ice-filled and water-shortage indicator will flicker alternately, and the ice maker will stop working.

Fault phenomenon	Cause of issue	Solution
No power Equipment does not respond	Not powered	Check the power supply Check the power cord connection Check the power cord for damage
	There is no power in the power jack	
	The power cord is not plugged in firmly	
	Power cord is damaged	Call authorized technician repair
Add water indicator light	Lack of water or too little water	Please add water
	Poor water insensitivity	Restart after 2 minutes of power failure
	The pump is stuck or damaged	Call authorized technician repair
	Water shortage sensor is bad	Call authorized technician repair
Ice full indicator light	Ice full	Please take out the ice cubes
	Ice full induction	Cleaning induction probe
	Ice full sensor is bad	Call authorized technician repair
Ice cubes stuck together	Ice making environment temperature or water temperature is too low	Add water to increase the temperature of ice making water
	Evaporator deformation, sagging	Push up the icicles with your hand

Small ice making Ice making is not big	Ice making ring temperature, water temperature is too high	Continue to make a few rounds of ice to lower the water temperature
	Evaporator deformation upturn	Pull down the low icicles by hand
The machine is working properly but does not make ice	Refrigeration pipe blockage	Call authorized technician repair
	Refrigerant leak	Call authorized technician repair
Water shortage and ice full indicator flash alternately	Ice cubes are stuck in ice box	Turn off the power supply and restart when the ice melts. Choose smaller ice cubes.
	Mechanical failure	Observe the state of the ice box and restart after 2 minutes of slightly switching off the power.
	Component damage	Call authorized technician repair
Other system failure	/	Call authorized technician repair

SOUND DURING MACHINE OPERATION

The new ice maker may make unfamiliar sounds. Most sounds are normal.

For example:

* Efficient compressors emit beating or sharp sounds.
* Water splashes from the evaporator to the tank.
* At the end of each cycle, you can hear the gurgling of refrigerant flow.
* The sound of air compressed by the condenser fan over the condenser.
* In the final deicing cycle, you may hear ice falling into the box.

WARRANTY

After-sales Service Letter of Commitment:

All products purchased in our company are guaranteed to keep in good repair for 1 year. If quality problems happen in guarantee period, our company will maintain for free or provide replacement. Additionally, our company provides technical support and fittings for life. After-sales service isn't restricted by time and hear feedback idea of users and deal with them in time. If you are caught in some problems when using our products, welcome to contact us at any time.

TECHNICAL PARAMETER

Model	DBJ-12D1
Ice storage capacity	1.54lb
Water tank volume	73.9oz
Noise	≤55dB(A)
Ice making time	6-8 minutes（59℉）
Cooling method	Compressor/air cooling
Refrigerant/injection volume	R600a/0.057lb
Grade of protection against electric shock	I
24H ice making	26.46lb/24H
Rated voltage/frequency	120V/60Hz
Ice making	9pcs/each time
Type of thermal insulation	C5H10
Body material	ABS
Applicable Climate Types	SN/N
Net/Gos weight	18.5/21.4lb
Product size	10.3×13.4×14.4inch

Things To Be Best With Lifeplus

E-mail: service@lifepluspro.com

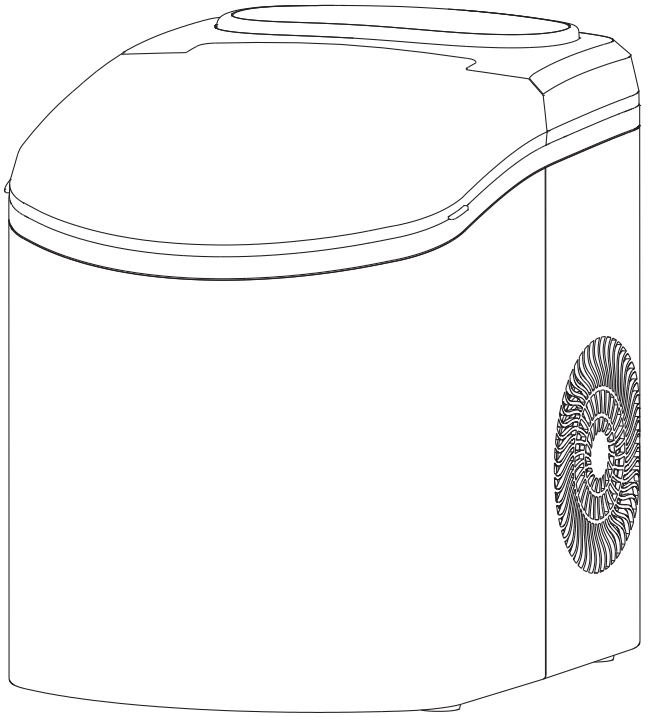

ICE MAKER

PRODUCT USE GUIDE