REFRIGERATOR MANUFACTURER

Turbo air

Turbo Air Speed up the Pace of Innovation

CAUTION!
PLEASE KEEP POWER
SWITCH ON BEFORE
OPERATING THIS EQUIPMENT

Commercial Refrigerator & Freezer Service Manual

Please read this manual completely before attempting to install or operate this equipment!

Premiere Series
SOLID DOOR

PRO-26R	**PRO-26-2R**
PRO-50R	**PRO-50-4R**
PRO-77R	**PRO-77-6R**
PRO-26F	**PRO-26-2F**
PRO-50F	**PRO-50-4F**
PRO-77F	**PRO-77-6F**

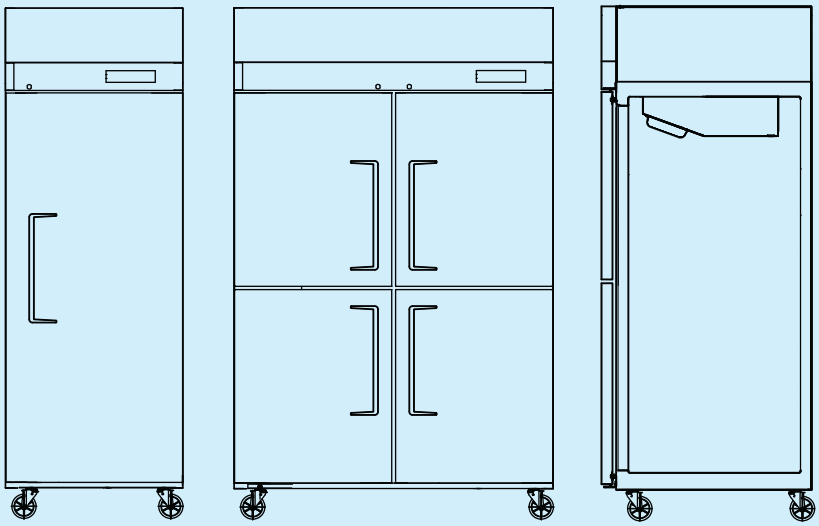

www.turboairinc.com

TABLE OF CONTENTS

1. FEATURE CHART

1-1.FRONT VIEW/PLAN VIEW (1DDOR):PRO-26R PRO-26F PRO-26-2R PRO-26-2F

1-2.FRONT VIEW/PLAN VIEW (2DDOR):PRO-50R PRO-50F PRO-50-4R PRO-50-4F

1-3.FRONT VIEW/PLAN VIEW (3DDOR):PRO-77R PRO-77F PRO-77-6R PRO-77-6F

2. WIRING DIAGRAMS

2-1. 1DDOR:PRO-26R PRO-26F PRO-26-2R PRO-26-2F

2-2. 2DDOR:PRO-50R PRO-50F PRO-50-4R PRO-50-4F

2-3. 3DDOR:PRO-77R PRO-77F PRO-77-6R PRO-77-6F

3. PART DETAIL

3-1.ASS'Y COMP BASE

3-2.ASS'Y EVAP HOUSING

3-3.CONTROL BOX

3-4.TOP GRILLE(B)

3-5.DOOR

3-6.DUCT

4. MAIN COMPONENTS

5. ELECTRONIC CONTROLLER INSTRUCTION

5-1.FREEEZER CONTROLLER

5-1-1. HOW TO USE THE PANEL

5-2.REFRIGERATOR CONTROLLER

5-2-1.HOW TO USE THE PANEL

6. PARTS LIST

7. REPLACEMENT OF MAIN COMPONENTS

7-1 .TOP GRILLE PART

7-2. CONTROL BOX PART

7-3. REPLACE DOOR

7-3-1. REPLACE DOOR (PRO-26R, PRO-26F,PRO-50R,PRO-50F,PRO-77R,PRO-77F)

7-3-2 . REPLACE DOOR (PRO-26-2R, PRO-26-2F,PRO-50-4R,PRO-50-4F,
PRO-77-6R,PRO-77-6F)

7-4. REFRIGERATION COMPARTMENT'S PART.

7-4-1. REPLACE LAMP

TABLE OF CONTENTS

7-4-2 . REPLACE F/T SENSOR AND D SENSOR (F-SENSOR IS ORANGE COLOR, T-SENSOR IS WHITE AND D-SENSOR IS BLUE)

7-4-3. REPLACE THE EVAPORATOR COIL, EXPANSION VALVE AND THERMAL FUSE

7-4-4.REPLACE THE DEFROST HEATER (FREEZER ONLY)

7-5. CONDENSER UNIT

7-6. REPLACE THE CABINET HEATER AND MULLION HEATER

1.FEATURE CHART

1-1.FRONT VIEW/PLAN VIEW (1DOOR)

MODEL:PRO-26R PRO-26F

FRONT VIEW

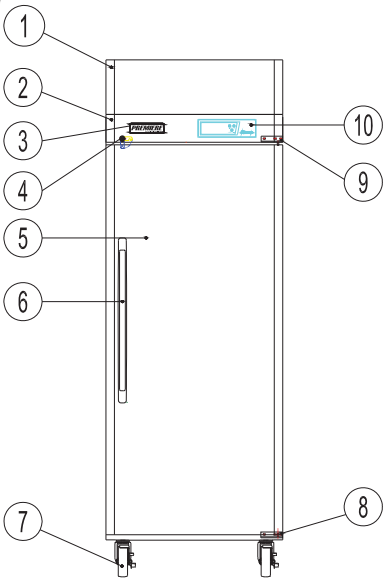

1 TOP GRILLE(T)
2 TOP GRILLE(B)
3 MASCOT
4 KEY
5 ASS'Y DOOR
6 DOOR HANDLE
7 CASTER
8 BOTTOM HINGE
9 TOP HINGE
10 FRONT PCB CASE
11 COMP BASE
12 COMPRESSOR
13 CAPACITOR
14 DRAIN CASE
15 DRAIN PIPE

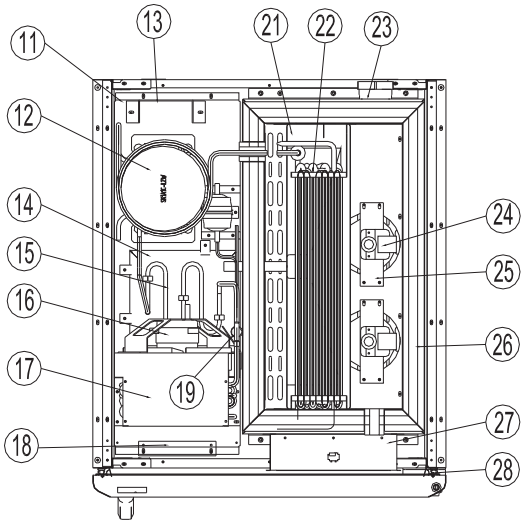

16.CONDENSER MOTOR
17 CONDENSER
18 COMP BASE BRACKET
19 PRESSURE SWITCH
21 DRAIN GUIDE
22 EVAPORATOR
23 PRESSURE RELIEF
24 EVAPORATOR FAN MOTOR
25 COOLING MOTOR BRACKET
26 EVAP HOUSING
27 CONTROL BOX
28 DOOR GASKET

FEATURE CHART

MODEL:PRO-26-2R PRO-26-2F

FRONT VIEW

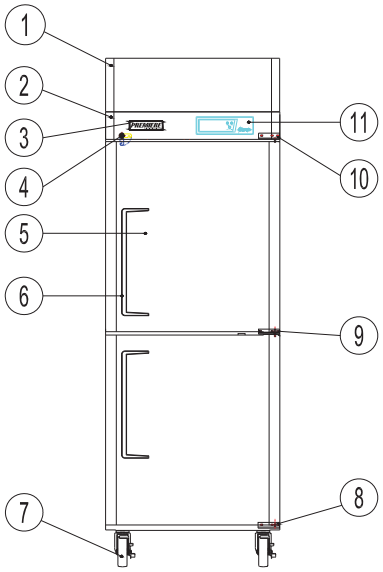

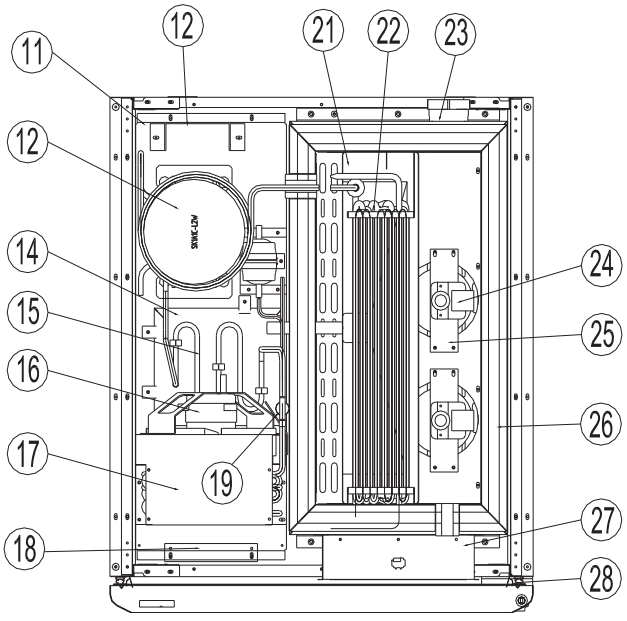

1 TOP GRILLE(T)
2 TOP GRILLE(B)
3 MASCOT
4 KEY
5 ASS'Y DOOR
6 DOOR HANDLE
7 CASTER
8 BOTTOM HINGE
9 MIDDLE HINGE
10 TOP HINGE
11 FRONT PCB CASE
12 COMP BASE
13 COMPRESSOR
14 CAPACITOR
15 DRAIN CASE
16 DRAIN PIPE
17 CONDENSER MOTOR
18 CONDENSER
19 COMP BASE BRACKET
20 PRESSURE SWITCH
21 DRAIN GUIDE
22 EVAPORATOR
23 PRESSURE RELIEF
24 EVAPORATOR FAN MOTOR
25 COOLING MOTOR BRACKET
26 EVAP HOUSING
27 CONTROL BOX
28 DOOR GASKET

1-2.FRONT VIEW/PLAN VIEW (2DOOR)

MODEL:PRO-50R PRO-50F

FRONT VIEW

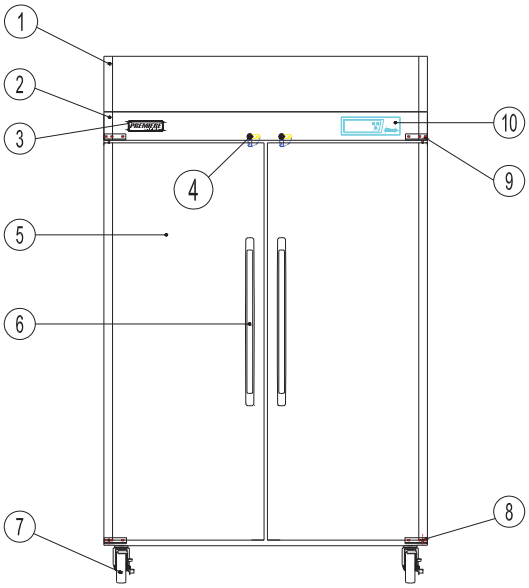

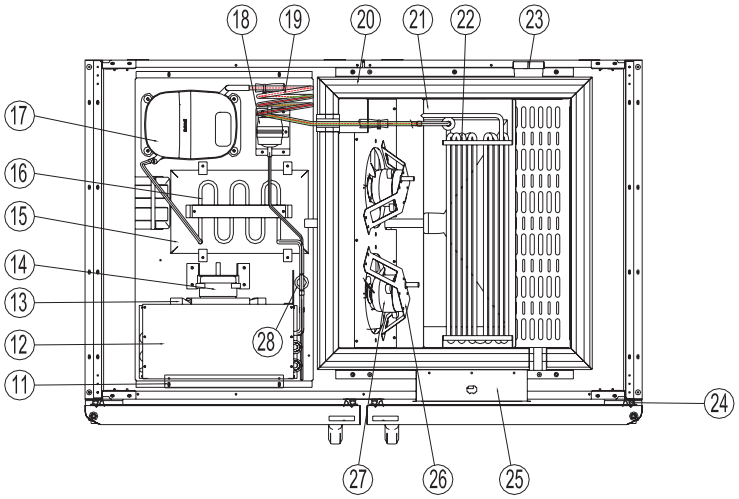

1 TOP GRILLE(T)
2 TOP GRILLE(B)
3 MASCOT
4 KEY
5 ASS'Y DOOR
6 DOOR HANDLE
7 CASTER
8 BOTTOM HINGE
9 TOP HINGE
10 FRONT PCB CASE
11 COMP BASE BRACKET
12 CONDENSER
13 CONDENSER FAN BLADE
14 CONDENSER FAN MOTOR
15 DRAIN CASE
16 DRAIN PIPE
17 COMPRESSOR
18 FILTER DRYER
19 SUCTION PIPE
20 EVAP HOUSING
21 DRAIN GUIDE
22 EVAPORATOR
23 PRESSURE RELIEF
24 DOOR GASKET
25 CONTROL BOX
26 COOLIN MOTOR BRACKET
27 EVAPORATOR FAN MOTOR
28 PRESSURE SWITCH

FEATURE CHART

`

MODEL:PRO-50-4R PRO-50-4F

FRONT VIEW

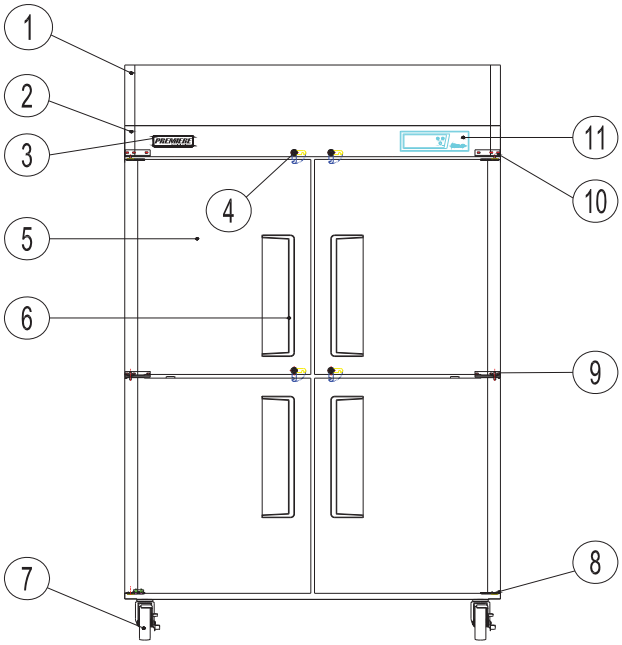

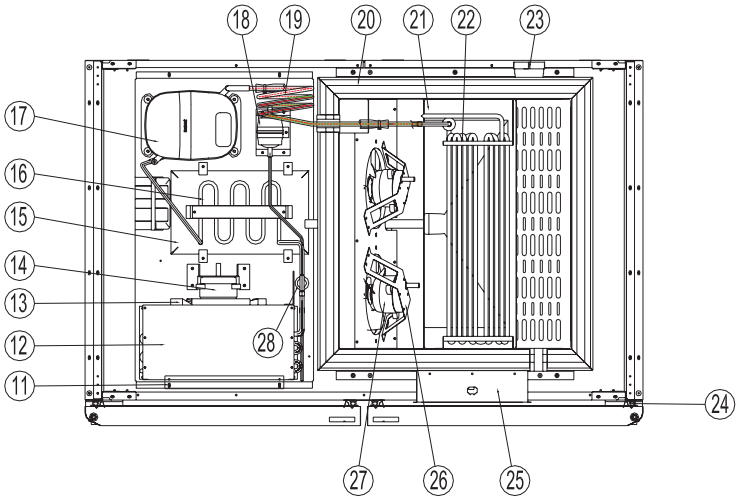

1 TOP GRILLE(T)
2 TOP GRILLE(B)
3 MASCOT
4 KEY
5 ASS'Y DOOR
6 DOOR HANDLE
7 CASTER
8 BOTTOM HINGE
9 MIDDLE HINGE
10 TOP HINGE
11 COMP BASE BRACKET
12 CONDENSER
13 CONDENSER FAN BLADE
14 CONDENSER FAN MOTOR
15 DRAIN CASE
16 DRAIN PIPE
17 COMPRESSOR
18 FILTER DRYER
19 SUCTION PIPE
20 EVAP HOUSING
21 DRAIN GUIDE
22 EVAPORATOR
23 PRESSURE RELIEF
24 DOOR GASKET
25 CONTROL BOX
26 COOLIN MOTOR BRACKET
27 EVAPORATOR FAN MOTOR
28 PRESSURE SWITCH

1-3.FRONT VIEW/PLAN VIEW (3DOOR)

MODEL:PRO-77R PRO-77F

FRONT VIEW

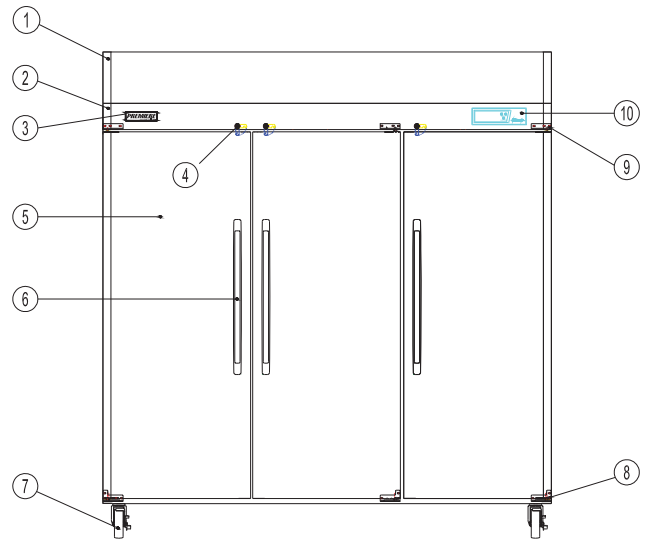

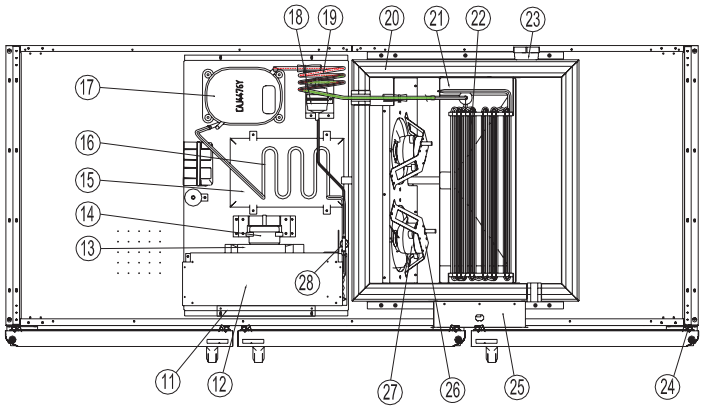

1 TOP GRILLE(T)
2 TOP GRILLE(B)
3 MASCOT
4 KEY
5 ASS'Y DOOR
6 DOOR HANDLE
7 CASTER
8 BOTTOM HINGE
9 TOP HINGE
10 FRONT PCB CASE
11 COMP BASE BRACKET
12 CONDENSER
13 CONDENSER FAN BLADE
14 CONDENSER FAN MOTOR
15 DRAIN CASE
16 DRAIN PIPE
17 COMPRESSOR
18 DRYER FILTER
19 SUCTION PIPE
20 EVAP HOUSING
21 DRAIN GUIDE
22 EVAPORATOR
23 PRESSURE RELIEF
24 DOOR GASKET
25 CONTROL BOX
26 COOLIN MOTOR BRACKET
27 EVAPORATOR FAN MOTOR
28 PRESSURE SWITCH

FEATURE CHART

MODEL:PRO-77-6R PRO-77-6F

FRONT VIEW

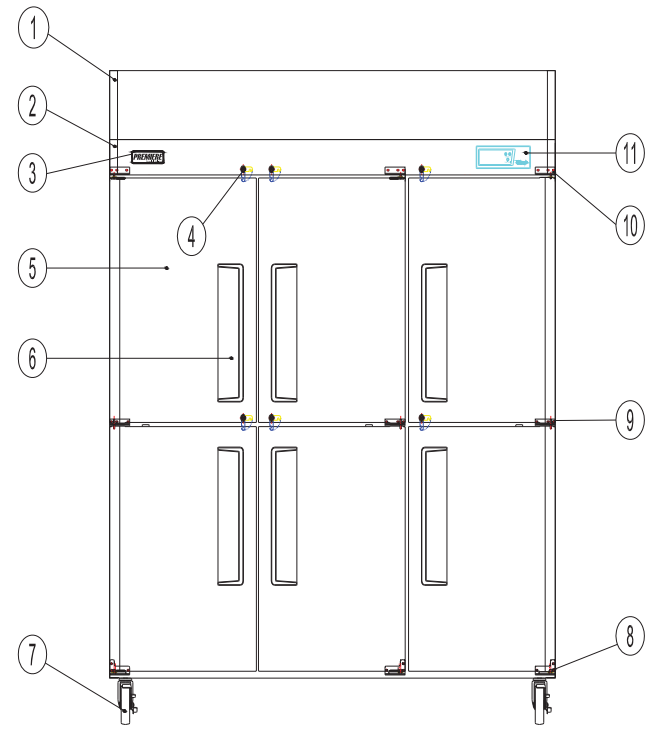

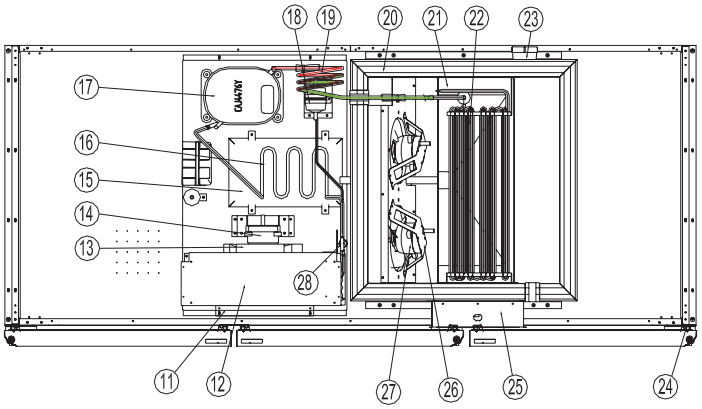

1 TOP GRILLE(T)
2 TOP GRILLE(B)
3 MASCOT
4 KEY
5 ASS'Y DOOR
6 DOOR HANDLE
7 CASTER
8 BOTTOM HINGE
9 MIDDLE HINGE
10 TOP HINGE
11 COMP BASE BRACKET
12 CONDENSER
13 CONDENSER FAN BLADE
14 CONDENSER FAN MOTOR
15 DRAIN CASE
16 DRAIN PIPE
17 COMPRESSOR
18 FILTER DRYER
19 SUCTION PIPE
20 EVAP HOUSING
21 DRAIN GUIDE
22 EVAPORATOR
23 PRESSURE RELIEF
24 DOOR GASKET
25 CONTROL BOX
26 COOLIN MOTOR BRACKET
27 EVAPORATOR FAN MOTOR
28 PRESSURE SWITCH

2.WIRING DIAGRAMS

2-1. 1DOOR

PRO-26R

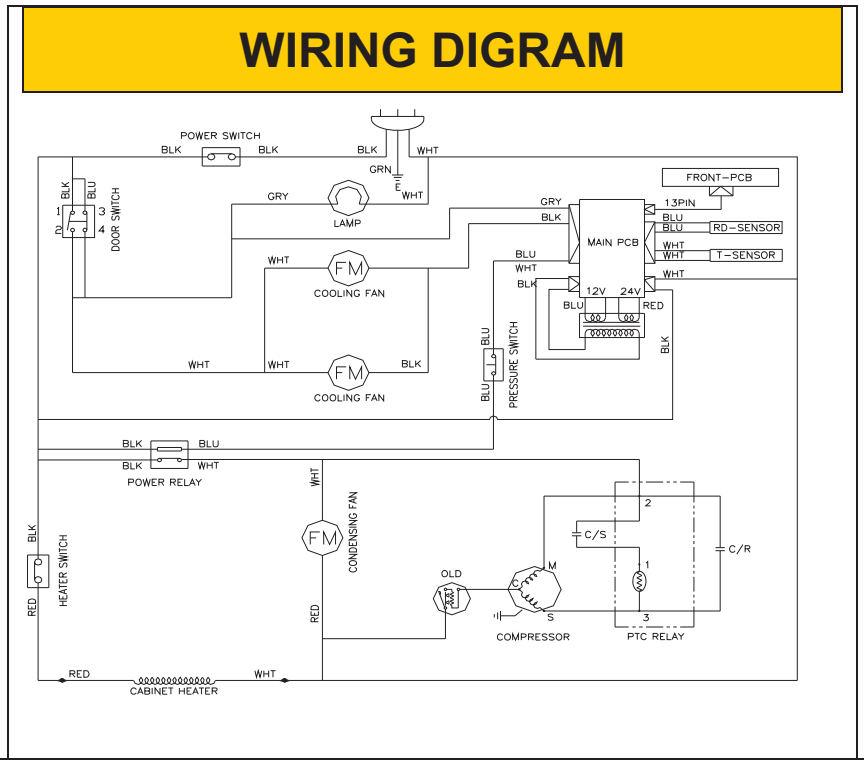

PRO-26F

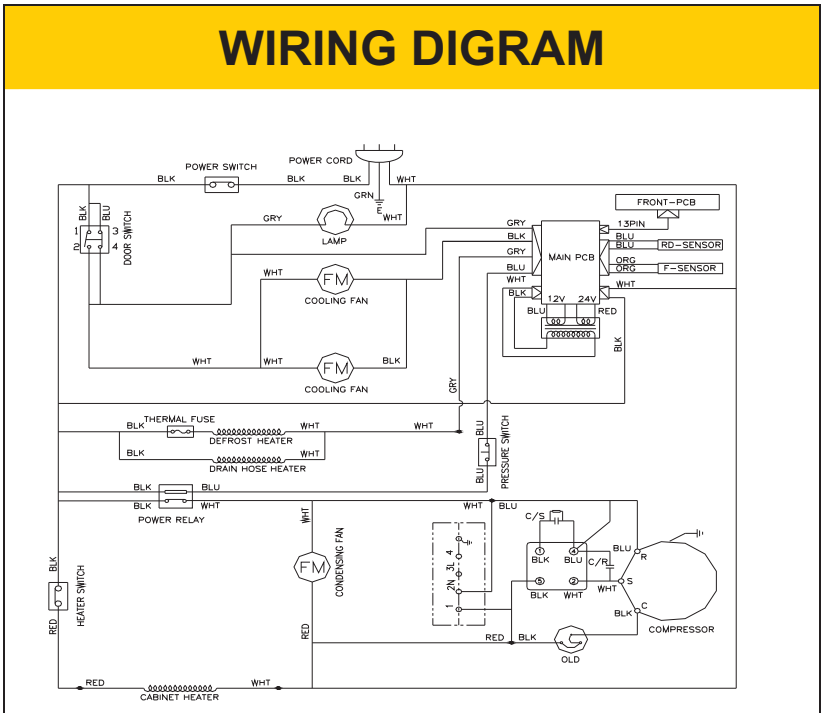

WIRING DIAGRAMS

PRO-26-2R

WIRING DIGRAM

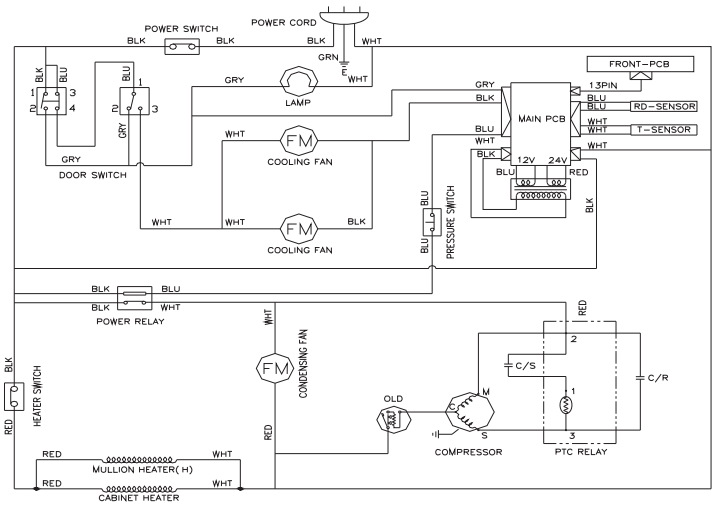

PRO-26-2F

WIRING DIGRAM

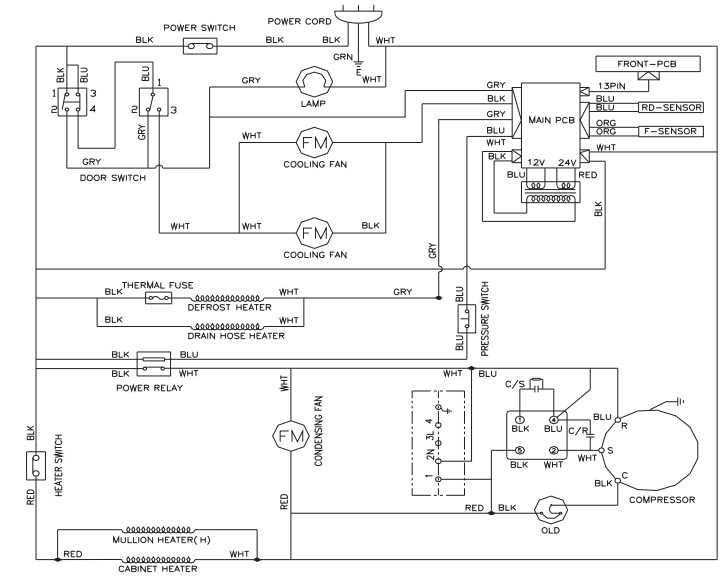

2-2. 2D00R

PRO-50R

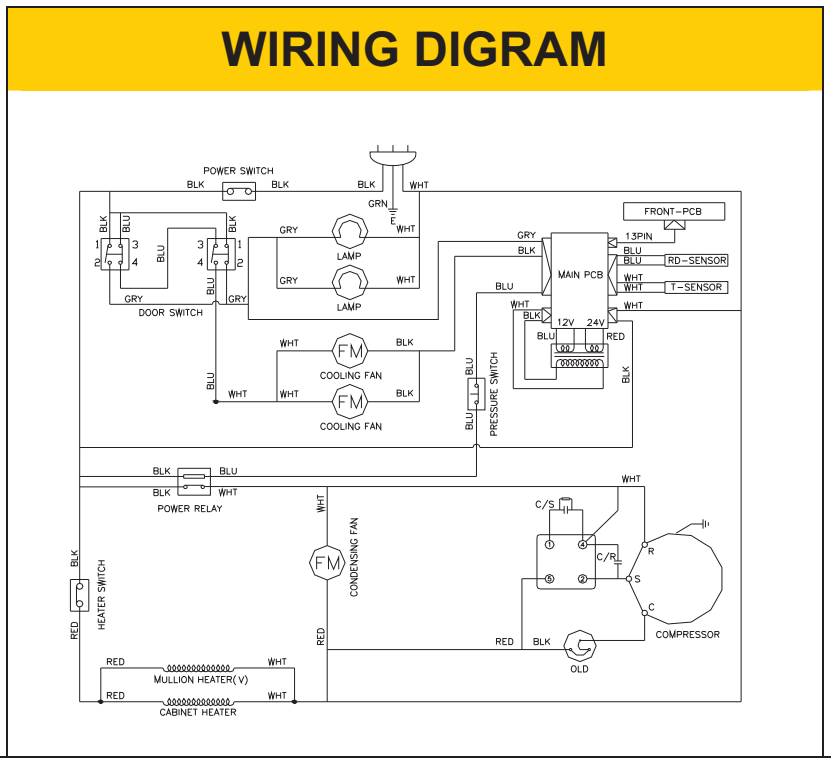

PRO-50F

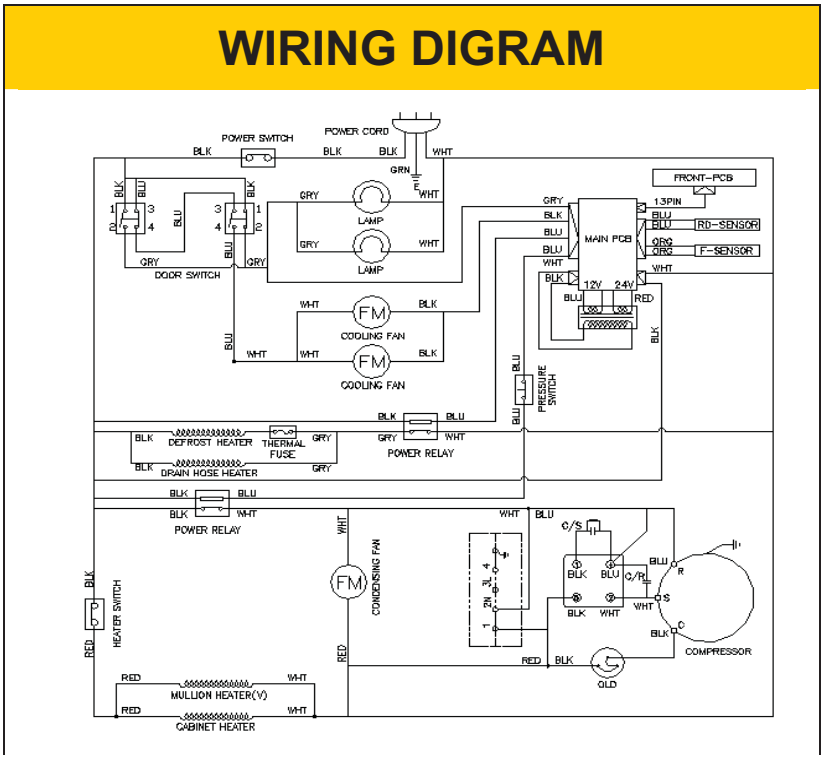

WIRING DIAGRAMS

PRO-50-4R

WIRING DIGRAM

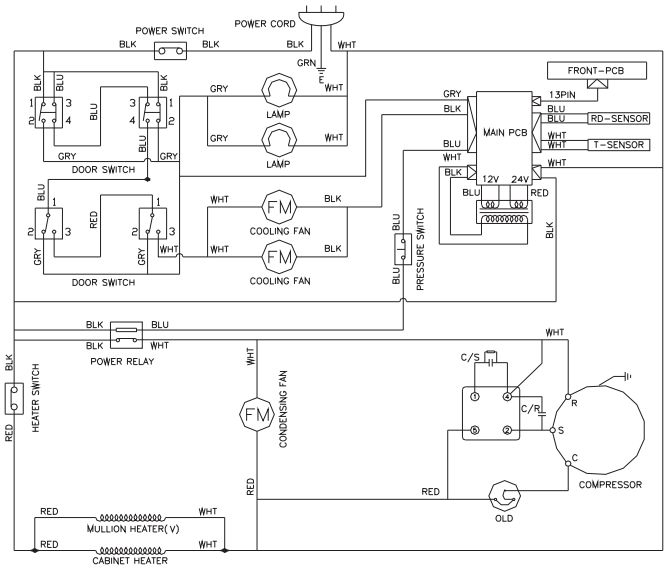

PRO-50-4F

WIRING DIGRAM

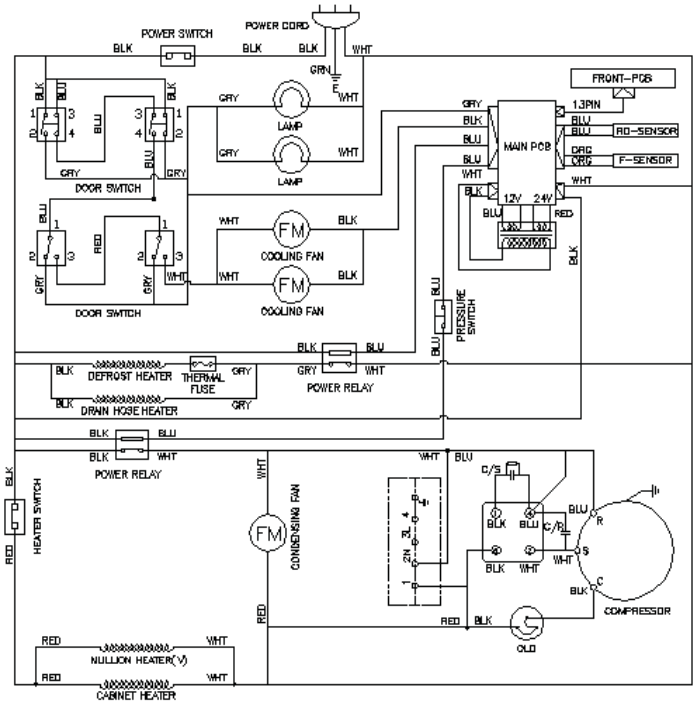

2-3. 3D00R

PRO-77R

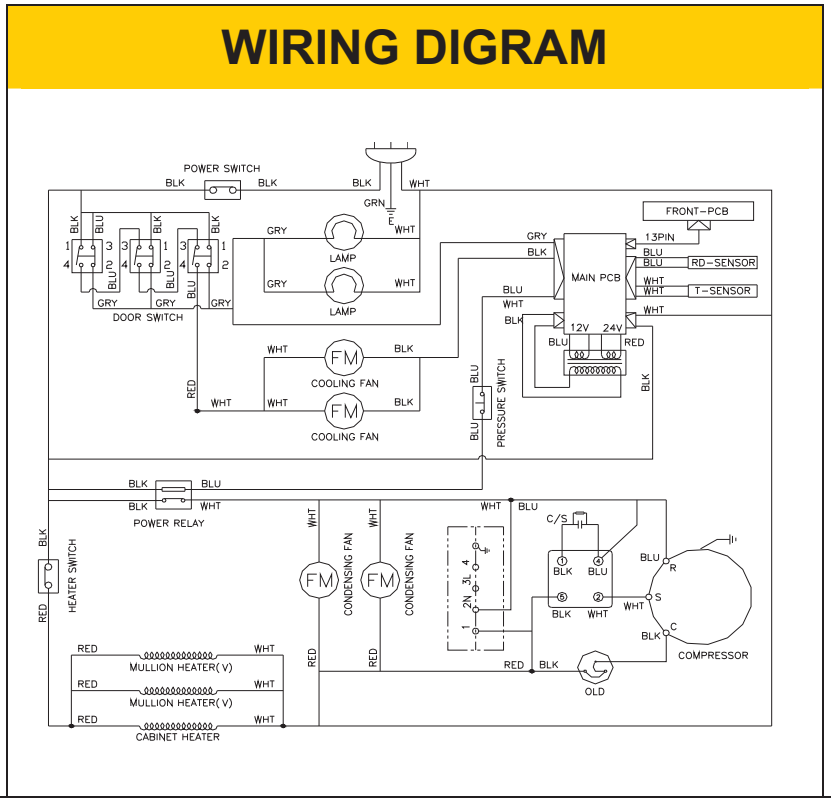

PRO-77F

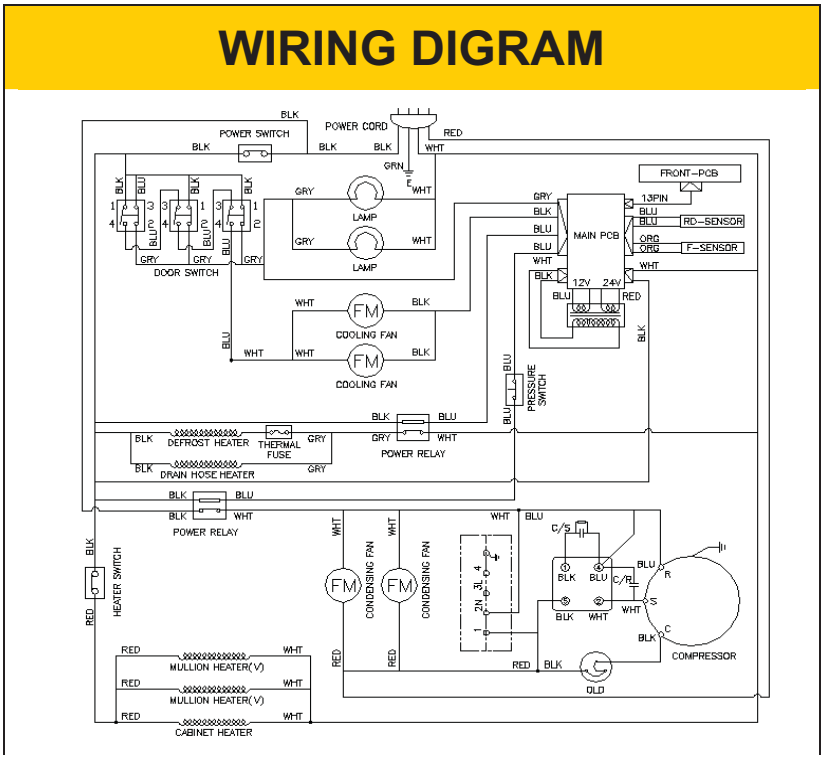

WIRING DIAGRAMS

PRO-77-6R

WIRING DIGRAM

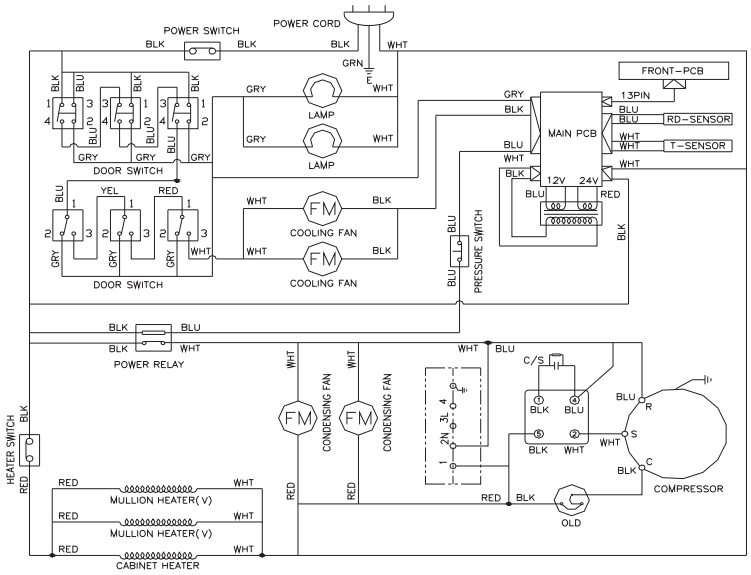

PRO-77-6F

WIRING DIGRAM

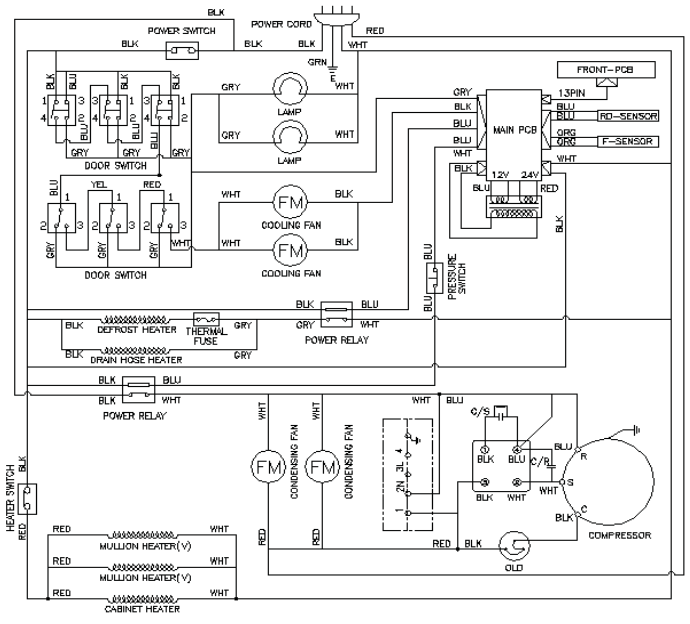

3.PART DETAIL

3-1.ASS'Y COMP BASE

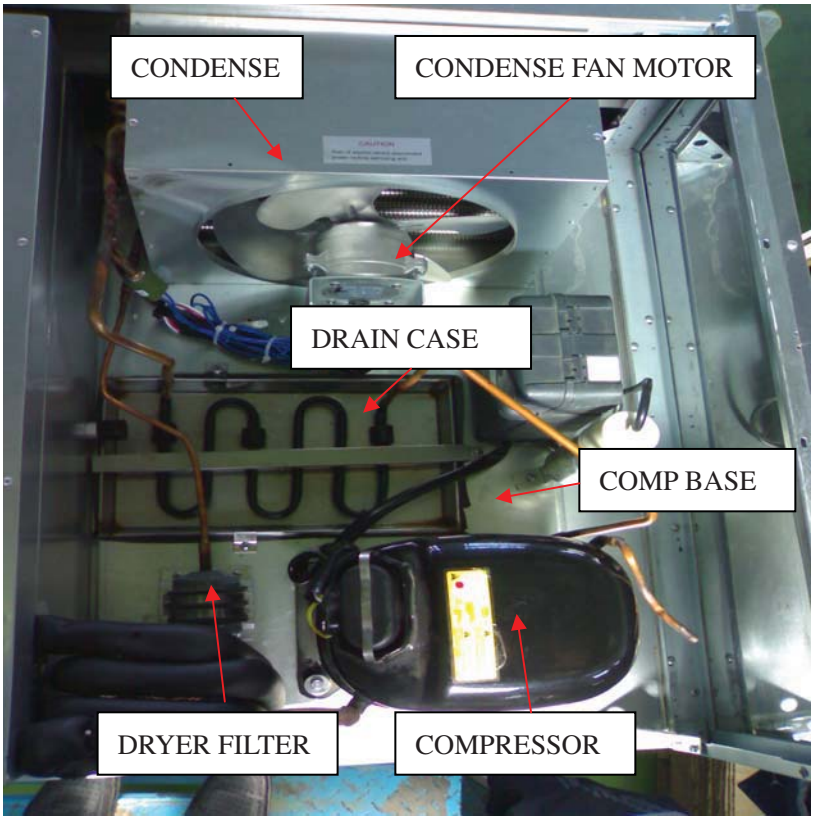

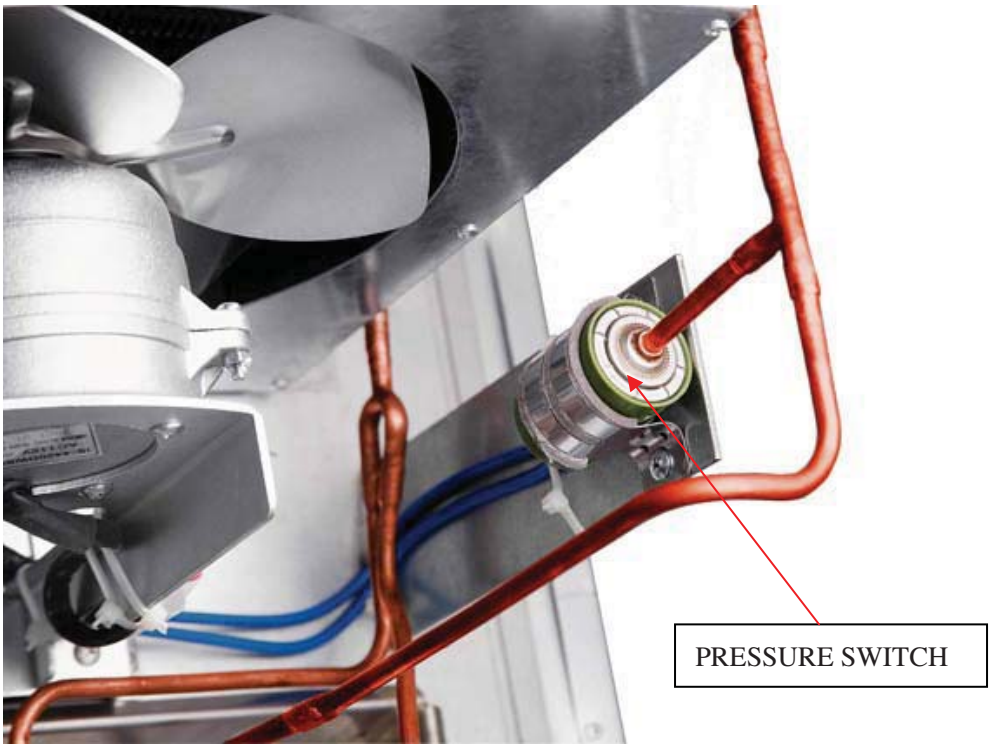

3-2.ASS'Y EVAP HOUSING

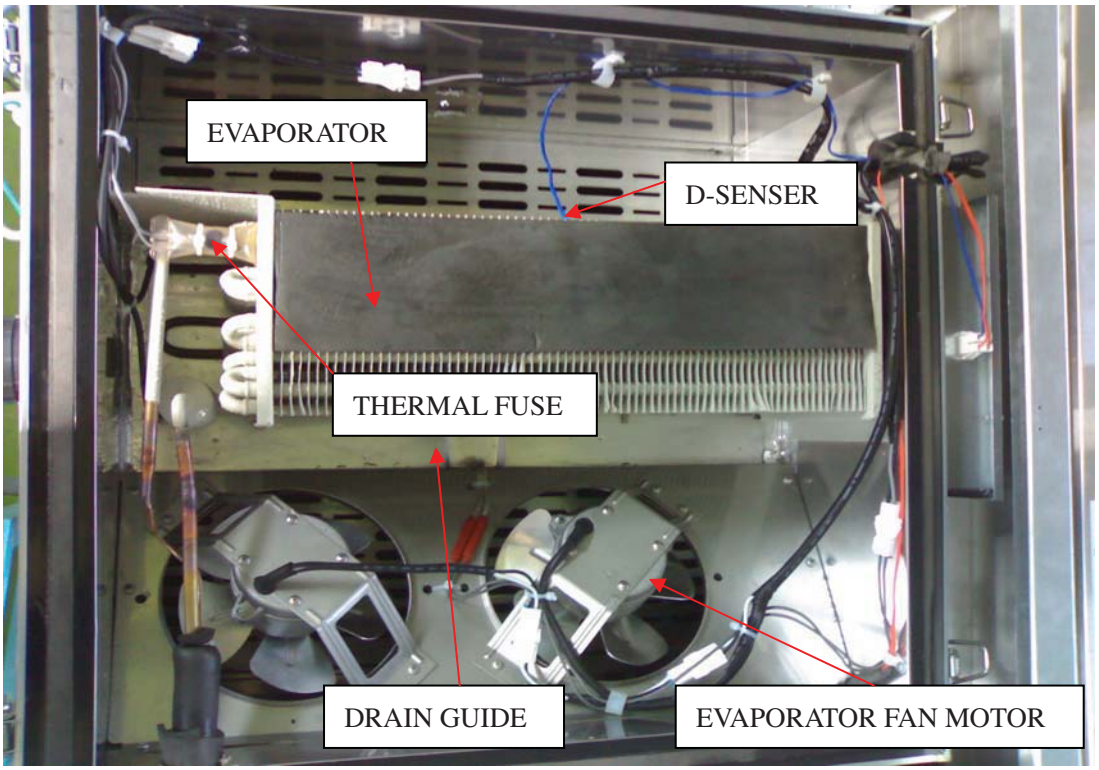

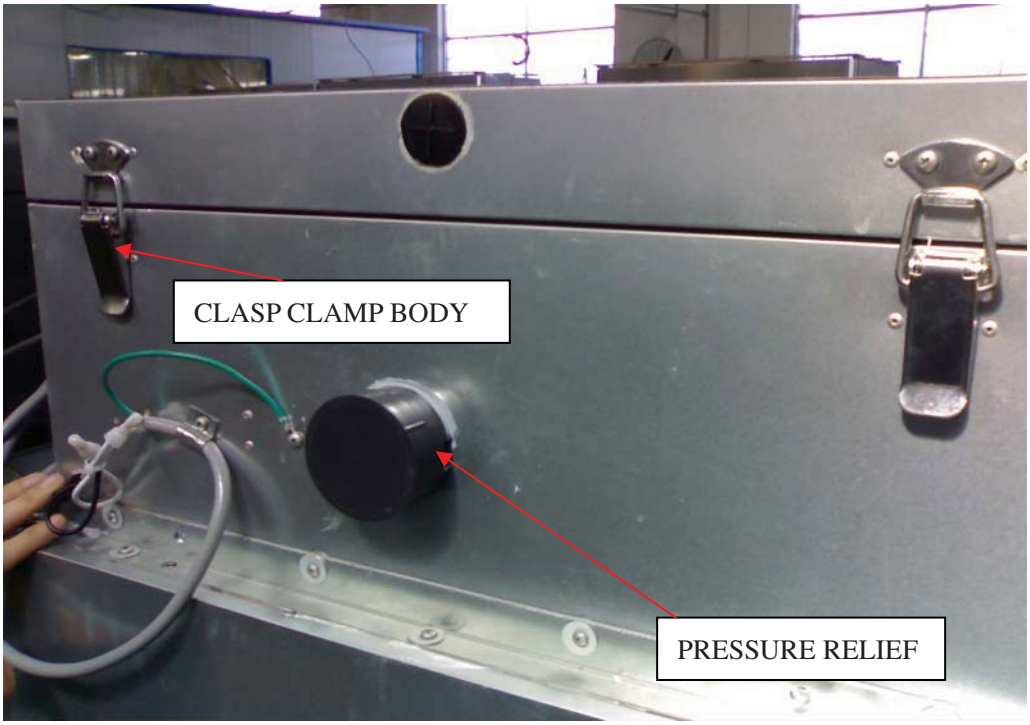

3-3.CONTROL BOX

26F,26R,50R,77R MODEL WITH ONE RELAY.

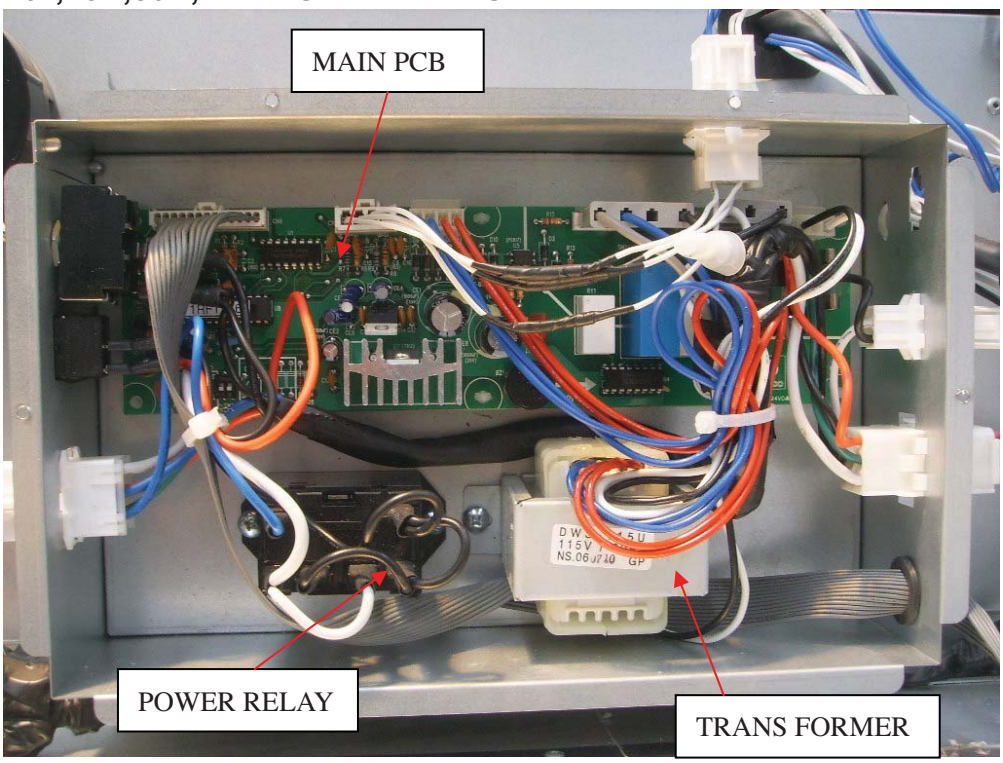

50F,77F MODEL WITH TWO RELAY.

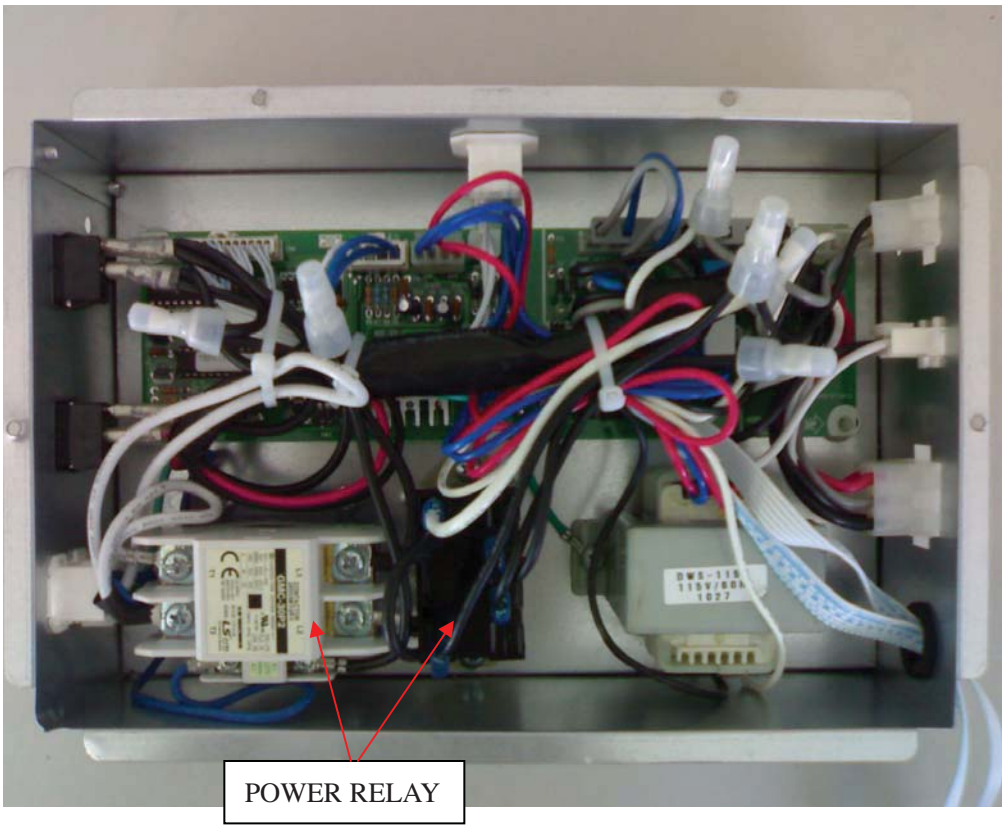

PART DETAIL

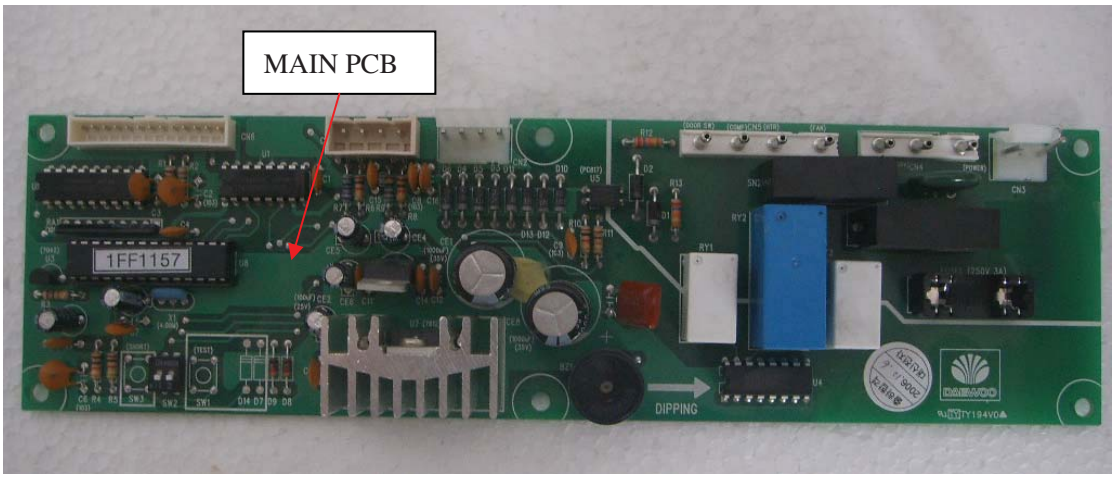

3-4.TOP GRILLE(B)

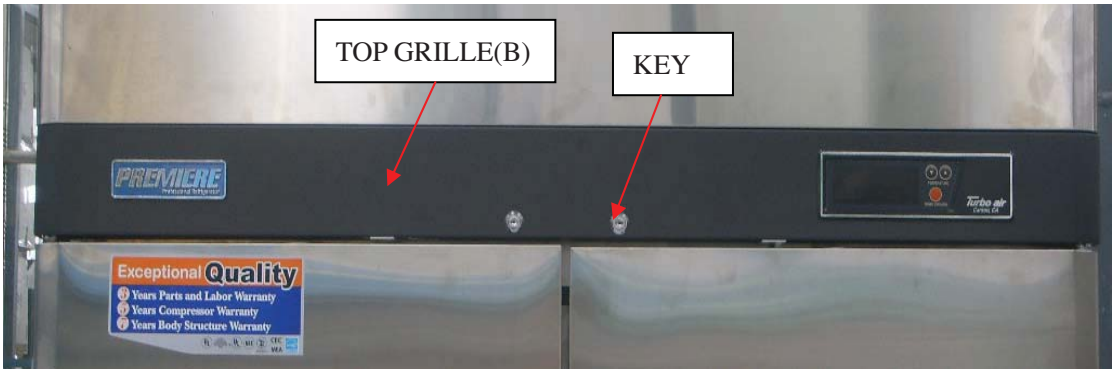



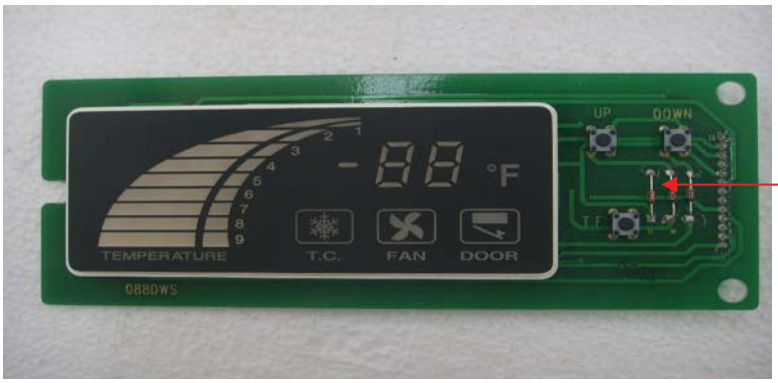

FRONT PCB

MASCOT



3-5.DOOR



ASS'Y DOOR

DOOR HANDLE

PART DETAIL





3-6.DUCT COVER

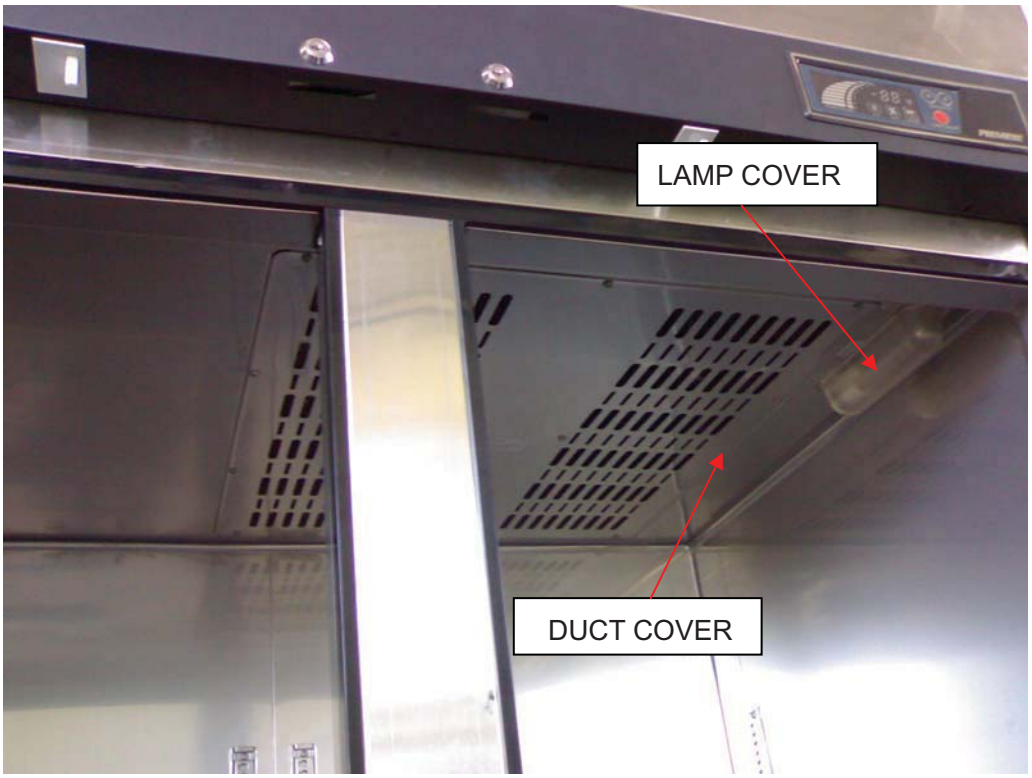

4. MAINCOMPONENTS

4-1.COMPRESSOR

Model	PRO-26R RRO-26-2R	PRO-26F PRO-26-2F	PRO-50R PRO-50-4R	PRO-50F PRO-50-4F	PRO-77R PRO-77-6R	PRO-77F PRO-77-6F
Refrigerant	R-134a	R-404a	R-134a	R-404a	R-134a	R-404a
Voltage	115V	115V	115V	115V	115V	220V
Comp. Model	SK1A1C-L2W	CAJ2432Z	CAE4456Y	CAJ2446Z	CAJ4476Y	CAJ2464Z
Part code	M609700100	P2F5700100	P5R5700100	P5F5700100	P8R5700100	P8F5700100
Starting Type	CSR	CSR	CSR	CSR	CSR	CSR

4-2.COMPRESSOR RELAY

Model	PRO-26R RRO-26-2R	PRO-26F PRO-26-2F	PRO-50R PRO-50-4R	PRO-50F PRO-50-4F	PRO-77R PRO-77-6R	PRO-77F PRO-77-6F
Voltage	—	—	—	—	—	—
Relay Model	—	—	—	—	—	—

4-3.CONDENSER DRYER

Model	PRO-26R RRO-26-2R	PRO-26F PRO-26-2F	PRO-50R PRO-50-4R	PRO-50F PRO-50-4F	PRO-77R PRO-77-6R	PRO-77F PRO-77-6F
Refrigerant	—	—	—	—	—	—
Spec.	C-052-S	C-052-S	C-052-S	C-052-S	C-052-S	C-052-S
Part code	M726800100	M726800100	M726800100	M726800100	M726800100	M726800100

4-4.CAPACITOR

Model	PRO-26R RRO-26-2R	PRO-26F PRO-26-2F	PRO-50R PRO-50-4R	PRO-50F PRO-50-4F	PRO-77R PRO-77-6R	PRO-77F PRO-77-6F
Voltage	—	—	—	—	—	—
Running	250V/12 μF	400V/30 μF±10%	250V/72 μF-0~20%	400V/30 μF	—	400V/45 μF
Part code	—	—	—	—	—	—
Starting	125V/125 μF	160V//315 μF	160V//315 μF	250V/88 μF-0~20%	160V/250 μF-0~20%	160V/315 μF
Part code	—	—	—	—	—	—

4-5.EVA FAN MOTOR

Model	PRO-26R RRO-26-2R	PRO-26F PRO-26-2F	PRO-50R PRO-50-4R	PRO-50F PRO-50-4F	PRO-77R PRO-77-6R	PRO-77F PRO-77-6F
Voltage	115V/60Hz		115V/ 60Hz			
Motor Model.	IS-3220QTBA		IS-4420DWSN-2A			
Part code	M729900200		P8F6600100			

4-6.CONDENSOR FAN MOTOR

Model	PRO-26R RRO-26-2R	PRO-26F PRO-26-2F	PRO-50R PRO-50-4R	PRO-50F PRO-50-4F	PRO-77R PRO-77-6R	PRO-77F PRO-77-6F
Voltage	115V, 60Hz					220V, 60Hz
Motor Model.	IS-4420DWSG-1					IS-4420DWSQ-1
Part code	G8F6600100					G8F6600200

4-7.EVA DEFROST HEATER

Model	PRO-26R RRO-26-2R	PRO-26F PRO-26-2F	PRO-50R PRO-50-4R	PRO-50F PRO-50-4F	PRO-77R PRO-77-6R	PRO-77F PRO-77-6F
Voltage	X	115V	X	115V	X	115V
Spec..	X	445W	X	600W	X	900W
Part code	X	P2F5300302	X	P5F5300202	X	P8F5300502

4-8.LAMP BULB

Model	PRO-26R RRO-26-2R	PRO-26F PRO-26-2F	PRO-50R PRO-50-4R	PRO-50F PRO-50-4F	PRO-77R PRO-77-6R	PRO-77F PRO-77-6F
Voltage	115V					
Spec..	40W					
Part code	P996300100					

4-9.TRANSFORMER

Model	PRO-26R RRO-26-2R	PRO-26F PRO-26-2F	PRO-50R PRO-50-4R	PRO-50F PRO-50-4F	PRO-77R PRO-77-6R	PRO-77F PRO-77-6F
Voltage	115V					
Spec..	DWS-115U 115V 60Hz					
Part code	P996000100					

4-10.MAIN PCB

Model	PRO-26R RRO-26-2R	PRO-26F PRO-26-2F	PRO-50R PRO-50-4R	PRO-50F PRO-50-4F	PRO-77R PRO-77-6R	PRO-77F PRO-77-6F
Voltage	115V	115V	115V	115V	115V	115V
Spec..	115V 60Hz	115V 60Hz	115V 60Hz	115V 60Hz	115V 60Hz	115V 60Hz
Part code	P8R5400100	P8F5400100	P8R5400100	P8F5400100	P8R5400100	P8F5400100

5. ELECTRONIC CONTROLLER INSTRUTION

5-1.FREEZER CONTROLLER

HOW TO USE THE PANEL

BACIC OPERATION

PRO-26F PRO-26-2F
PRO-50F PRO-50-4F
PRO-77F PRO-77-6F

1. Plug in and turn on the power switch located on the bottom of the top grille right side. The Display panel will be lighted and make a beep sound. The compressor will begin to run.

2. The default temperature setting is No. “5”.

3. The compressor is automatically cycled by the electronic controller (PCB, F-Sensor).

4. The Defrost cycle is automatically controlled by the D-sensor, and the PCB.

5. Set level toward “1” for higher temperatures and toward “9” for lower temperatures.

6. The interior light is activated by the rocker switch at the bottom of the grille when the door is opened.

7. Evaporator fan motor(s) will run after all doors are completely closed.

8. Good Air Flow in freezer unit is critical.

Be careful to load product so that it neither presses against the back wall, nor reaches within four inches from the evaporator compartment.

ELECTRONIC CONTROLLER INSTRUCTION

DISPLAY PANEL OF FREEZER

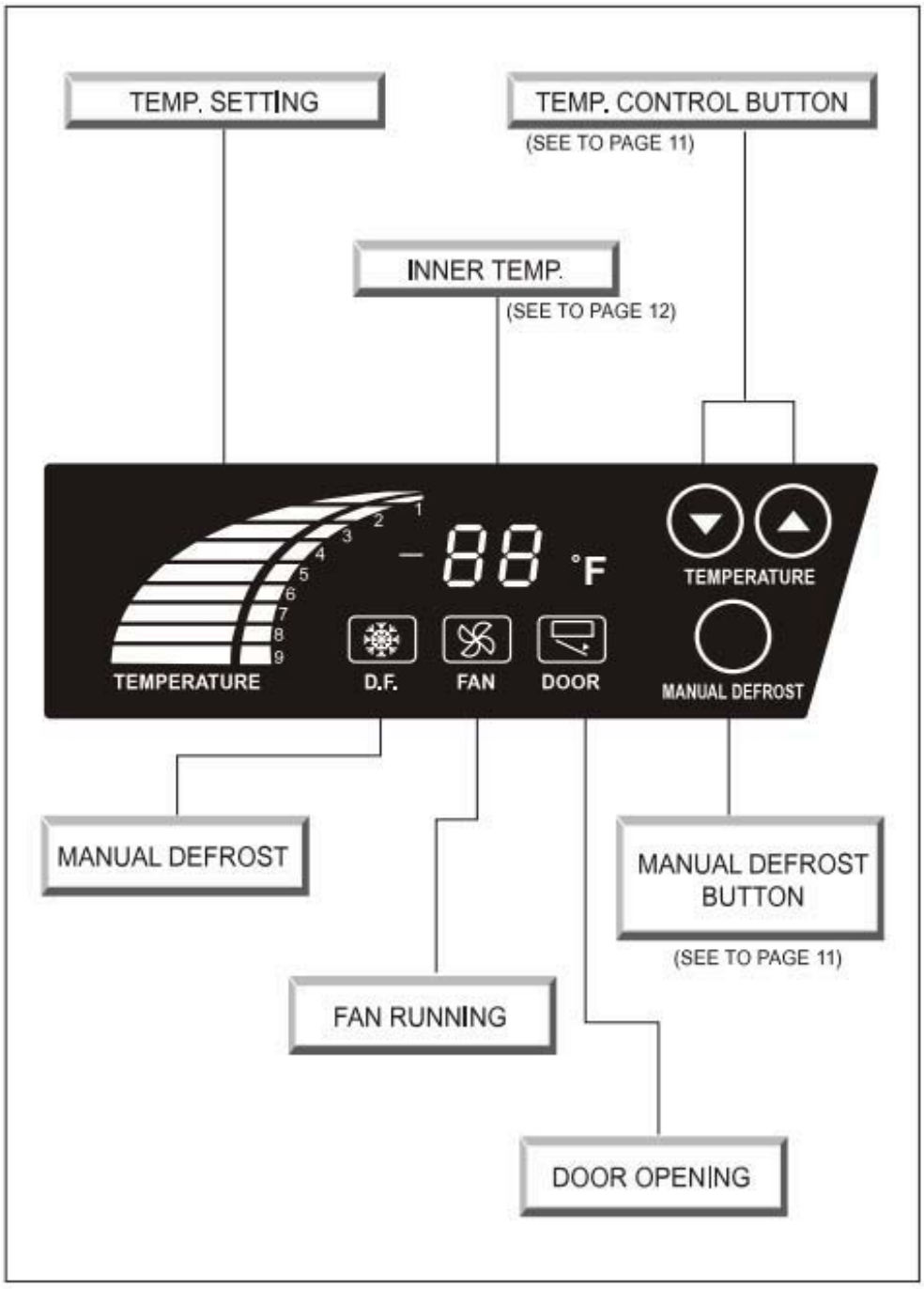

ELECTRONIC CONTROLLER INSTRUCTION

MANUAL DEFROST

1. If you push MANUAL DEFROST button for 5 seconds, the Defrost will start.
2. During the Manual Defrost mode, the Up/Down button for the temp, control can not make the compressor cycle ON or OFF.
3. If you want to change the Manual Defrost mode to the normal mode, push MANUAL DEFROST button for 5 seconds.

UP/DOWN BUTTON (Temperature control button)

1. By pushing the up/down button, you can set the inside temperature level from '1' to '9'.
2. If you want lower temperatures, push the Down button to be lighted higher level numbers.

DEFROST

1. The electronic defrost controller is set at the factory to provide a defrost cycle every 6 hours (4 times per a day).
2. If it is necessary to change the intervals of defrost due to unusual operating conditions, it can be accomplished by adjusting the switch which is located on the inside of the top grille.
3. Once all frost is eliminated, the temperature continues to rise until it reaches 60˚F (15˚C). When this temperature is sensed by the defrost limit control, the defrost control changes to refrigeration mode.
4. The panel displays " dF " during the defrost cycle.



ELECTRONIC CONTROLLER INSTRUCTION

INNER TEMPERATURE DISPLAY

1. It displays inside temperature.
2. Display range is -50˚F to 50˚F (-45˚C ~ +10˚C).
3. When inside temperature is lower than -50˚F, the panel will display ' LO '.



and, higher than +50˚F, the panel will show ' HI '.



FAN RUNNING INDICATOR

1. If the fan motor is running, fan running indicator will be turned on.
2. Evaporator fan motor is activated when the door (both doors for TSF-35SD,TSF-49SD, all three doors for TSF-72SD) is closed.

DOOR OPENING INDICATOR

1. If any door is opened, door opening indicator will be turned on.
2. In case that any door was opened around 30 seconds, warning beep sound will be ring three (3) times.
3. In case of passing around 1 minute, warning beep sound will be ring again five (5) times.
4. In case of passing around 5 minutes, the beep sound will be ring continuously.
5. On all the conditions good, the beep sound will stop immediately if the door closed properly.

ELECTRONIC CONTROLLER INSTRUCTION

5-2.REFRIGERATOR CONTROLLER

HOW TO USE THE PANEL

BACIC OPERATION

PRO-26R PRO-26-2R
PRO-50R PRO-50-4R
PRO-77R PRO-77-6R

1. Plug in and turn on the power switch located on the bottom of the top grille right side. The Display panel will be lighted and make a beep sound. The compressor will begin to run.
2. The default temperature setting is No. "5" .
3. The compressor is automatically cycled by the electronic controller (PCB, D-Sensor).
4. The Defrost cycle is automatically controlled by the R-sensor. and the PCB.
5. Set level toward "1" for higher temperature and toward "9" for lower temperature.
6. The interior light is activated by the rocker switch at the bottom of the grille when the door is opened.
7. Evaporator fan motor(s) will run after all doors are completely closed.

ELECTRONIC CONTROLLER INSTRUCTION

DISPLAY PANEL OF REFRIGERATOR

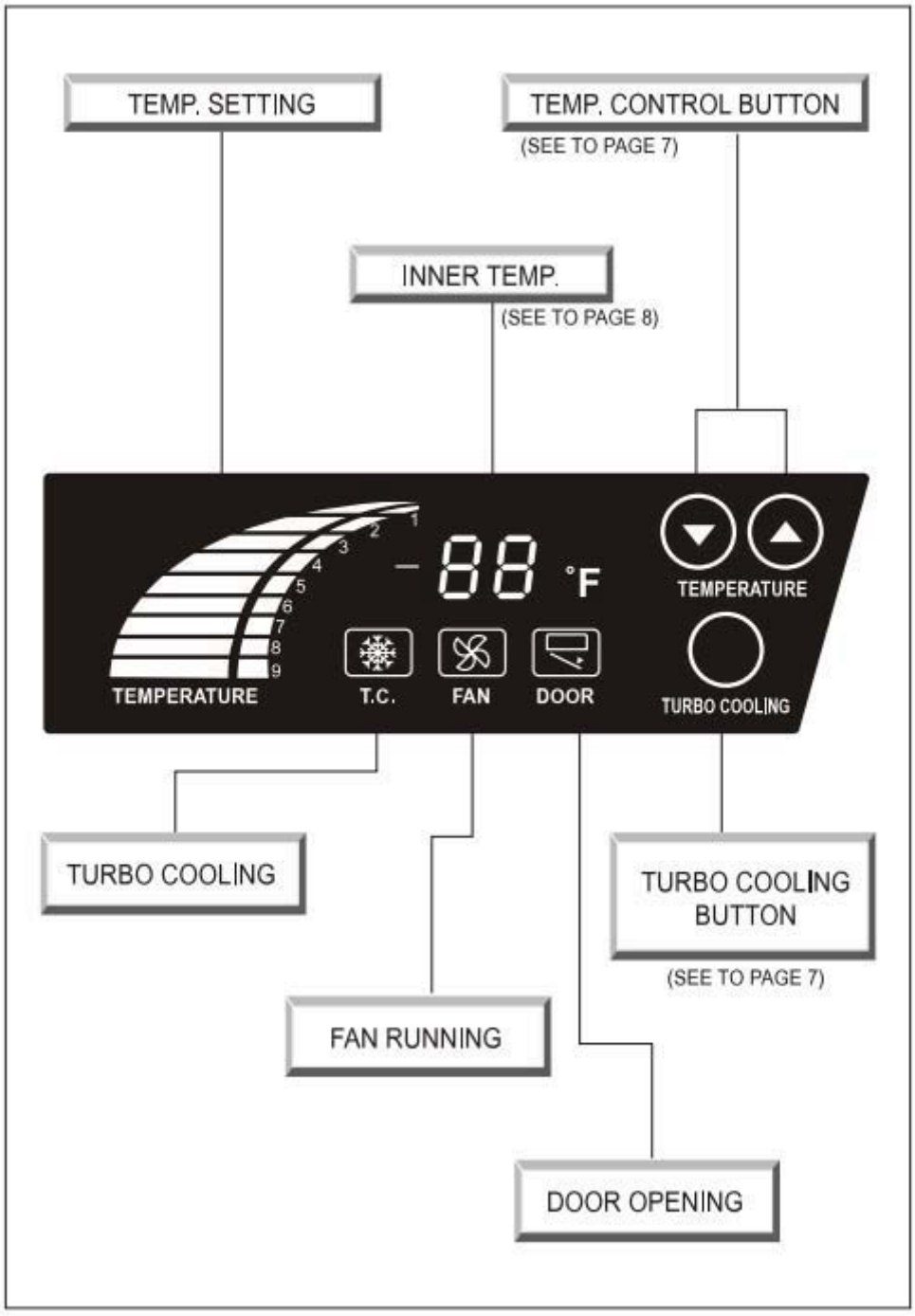

ELECTRONIC CONTROLLER INSTRUCTION

TURBO COOLING

1. If you push the T.C. (Turbo Cooling) button, the compressor will run continuously until D-Senser detect 14˚F (-10˚C) to bring down the temperature more quickly. (max.comp.run time = 120 min.)
2. If you push the T.C. button again during Turbo Cooling mode, the compressor will return to the normal operation.
3. During the Turbo Cooling mode works, the temperature Up/Down button will not affect the compressor's operation.

UP/DOWN BUTTON (Temperature control button)

1. By pushing the up/down button, you can set the inside temperature level from '1' to '9'.
2. If you want lower temperature, push the Down button to be lighted higher level numbers.

ELECTRONIC CONTROLLER INSTRUCTION

INNER TEMPERATURE DISPLAY

1. It displays the inside temperature.
2. Display range is 14˚F to 69˚F (-10˚C ~ +20˚C).
3. When the inside temperature is lower than 14˚F, the panel will display ' LO '.



and, higher than 69˚F, the panel will display ' HI '.



FAN RUNNING INDICATOR

1. If the fan motor is running, fan running indicator will be turned on.
2. Evaporator fan motor is activated when the door (both doors for TSR-35SD, TSR-49SD, all three doors for TSR-72SD) is closed.

DOOR OPENING INDICATOR

1. If any door is opened, door opening indicator will be turned on.
2. In case that any door was opened around 30 seconds, warning beep sound will be ring three (3) times.
3. In case of passing around 1 minute, warning beep sound will be ring again five (5) times.
4. In case of passing around 5 minutes, the beep sound will be ring continuously.
5. On all the conditions good, the beep sound will stop immediately if the door closed properly.

6.PARTS LIST FOR TOP MOUNT

Part name	Code	Material	Description	Model											
				26R	26F	26-2R	26-2F	50R	50F	50-4R	50-4F	77R	77F	77-6R	77-6F
Cabinet															
LINER FRAME COVER (L)(R)	P8R3100300	PVC-H		2	2	2	2	2	2	2	2	2	2	2	2
LINER FRAME COVER (T)(U)	P8R3100200	PVC-H										2	2	2	2
LINER FRAME COVER (T)(U)	P5R3100300	PVC-H						2	2	2	2				
LINER FRAME COVER (T)(U)	P2R3100500	PVC-H		2	2	2	2								
Control box															
MAIN PCB (F)	P8F5400100				1		1		1		1		1		1
MAIN PCB (R)	P8R5400100			1		1		1		1		1		1	
POWER RELAY	P995900100			1	1	1	1	1	1	1	1	1	1	1	1
POWER RELAY	G8F5900400								1		1				
POWER SWITCH	P995200300			1	1	1	1	1	1	1	1	1	1	1	1
POWER SWITCH	P995200400			1	1	1	1	1	1	1	1	1	1	1	1
TRANS FORMER	P996000100			1	1	1	1	1	1	1	1	1	1	1	1
Door															
ASS'Y DOOR (L)	P8F0500200							1	1			1	1		
ASS'Y DOOR (M)	P8F0500300											1	1		
ASS'Y DOOR (R)	P8F0500100							1	1			1	1		
ASS'Y DOOR (R)	P2F0500100			1	1										
ASS'Y DOOR (T)(L)	P8F0500600									1	1			1	1
ASS'Y DOOR (T)(M)	P8F0500800													1	1
ASS'Y DOOR (T)(R)	P8F0500400									1	1			1	1
ASS'Y DOOR (T)(R)	P2F0500200					1	1								
ASS'Y DOOR (U)(L)	P8F0500700									1	1			1	1
ASS'Y DOOR (U)(M)	P8F0500900													1	1
ASS'Y DOOR (U)(R)	P8F0500500									1	1			1	1
ASS'Y DOOR (U)(R)	P2F0500300					1	1								
DOOR GASKET	P8F3300300	PVC-S		1	1										
DOOR GASKET	P8F3300400	PVC-S						2	2			3	3		
DOOR GASKET	P2R3300300	PVC-S				2	2								
DOOR GASKET	P2R3300400	PVC-S								4	4			6	6

PARTS LIST FOR TOP MOUNT

Part name	Code	Material	Description	Model											
				26R	26F	26-2R	26-2F	50R	50F	50-4R	50-4F	77R	77F	77-6R	77-6F
Evap housing															
ASS'Y SENSOR (R)(D)	P8F6200400			1	1	1	1	1	1	1	1	1	1	1	1
CLASP BODY	P998100200			4	4	4	4	4	4	4	4	4	4	4	4
DEFROST HEATER	P8F5300500	SUS304											1		1
DEFROST HEATER	P5F5300200	SUS304							1		1				
DEFROST HEATER	P2F5300300	SUS304			1		1								
DRAIN HOSE HEATER	P8F5300400	PVC							1		1		1		1
DRAIN HOSE HEATER	P2F5300200	PVC			1		1								
F SENSOR	P8F6200100				1		1		1		1		1		1
MOTOR	P8F6600100							2	2	2	2	2	2	2	2
MOTOR	P2F6600100			3	3	3	3								
RESSURE RELIEF AIR CAP	P993200500	PVC		1	1	1	1	1	1	1	1	1	1	1	1
PRESSURE RELIEF BODY	P993200300	PVC		1	1	1	1	1	1	1	1	1	1	1	1
PRESSURE RELIEF CAP	P993200400	PVC		1	1	1	1	1	1	1	1	1	1	1	1
T SENSOR	P8F6200200			1		1		1		1		1		1	
THERMAL FUSE	P8F6200500				1		1		1		1		1		1
MULLION FRAME COVER (V)	P8F3100200	PVC-H								2	2			2	2
MULLION FRAME COVER (V)	P8F3100900	PVC-H						2	2			2	2		
MULLION HEATER (VER)	P8F5300200	PVC					1				2				3
MULLION HEATER (VER)	P8R5300200	PVC				1				2				3	
SHELF STANDARD	P8F2700100	AL		4	4	4	4	8	8	8	8	12	12	12	12
Insert part															
ASS'Y SHELF	P8F0800100							2	2	2	2	2	2	2	2
ASS'Y SHELF	P8F0800200											1	1	1	1
ASS'Y SHELF	P2F0800100			1	1	1	1								
CASTER BOX ASS'Y	P8F0800300											1	1	1	1
CASTER BOX ASS'Y	P8F0800400			1	1	1	1	1	1	1	1				
LAMP	P996300100			1	1	1	1	2	2	2	2	2	2	2	2
LAMP COVER	P993200100	PC		1	1	1	1	2	2	2	2	2	2	2	2
LAMP SOCKET	P996400100	ABS		1	1	1	1	2	2	2	2	2	2	2	2
SHELF CLIP	P993200800			12	12	12	12	24	24	24	24	36	36	36	36

PARTS LIST FOR TOP MOUNT

Part name	Code	Material	Description	Model											
				26R	26F	26-2R	26-2F	50R	50F	50-4R	50-4F	77R	77F	77-6R	77-6F
Out part															
BOTTOM HINGE (L)	P992900400	PO						1	1	1	1	1	1	1	1
BOTTOM HINGE (R)	P992900300	PO		1	1	1	1	1	1	1	1	2	2	2	2
CABINET HEATER	P8F5300100	PVC											1		1
CABINET HEATER	P5F5300100	PVC							1		1				
CABINET HEATER	P2F5300100	PVC			1		1								
CABINET HEATER	P8R5300100	PVC										1		1	
CABINET HEATER	P5R5300100	PVC						1		1					
CABINET HEATER	P2R5300100	PVC		1		1									
DOOR HANDLE	P993200200	ALDC		1	1			2	2			3	3		
DOOR HANDLE DECO	P993200600			1	1			2	2			3	3		
DOOR SWITCH	P995200200					1	1			2	2			3	3
SPRING BAR	G8F0501000			1	1			2	2			3	3		
SPRING BAR	G8F0501200					2	2			4	4			6	6
MIDDLE HINGE (L)	P992900500	PO								1	1			1	1
MIDDLE HINGE (R)	P992900600	PO				1	1			1	1			2	2
MULLION FRAME (H)	P2F3100100	PVC-H				2	2								
MULLION FRAME (H)	P8F3100300	PVC-H								4	4			6	6
MULLION FRAME COVER (H)	P8F3100400	PVC-H								4	4			6	6
MULLION FRAME COVER (H)	P8F3100500	PVC-H				2	2								
MULLION HEATER (HOR)	P8F5300300	PVC			1		1		1		1		1		1
MULLION HEATER (HOR)	P8R5300300	PVC		1		1		1		1		1		1	
TOP HINGE (L)	P992900100	PO						1	1	1	1	1	1	1	1
TOP HINGE (R)	P992900200	PO		1	1	1	1	1	1	1	1	2	2	2	2
Top grille															
DOOR SWITCH	P995200100			1	1	1	1	2	2	2	2	3	3	3	3
TOP GRILLE (B)	P5F1600100	EGI						1	1	1	1				

PARTS LIST FOR TOP MOUNT

Part name	Code	Material	Description	Model											
				26R	26F	26-2R	26-2F	50R	50F	50-4R	50-4F	77R	77F	77-6R	77-6F
TOP GRILLE (B)	P8F1600100	EGI						1	1	1	1				
TOP GRILLE (B)	P2F1600100	EGI										1	1	1	1
TOP GRILLE (T)	P5F1600200	GI		1	1	1	1	1	1	1	1	1	1	1	1
TOP GRILLE (T)	P8F1600200	SUS304-#4						1	1	1	1				
TOP GRILLE (T)	P2F1600200	SUS304-#4										1	1	1	1
Unit															
COMPRESSOR	P8F5700100		(CAJ 2464Z)										1		1
COMPRESSOR	P8R5700100		(CAJ 4476Y)									1		1	
COMPRESSOR	P5F5700100		(CAJ 2446Z)						1		1				
COMPRESSOR	P5R5700100		(CAE 4456Y)					1		1					
COMPRESSOR	P2F5700100		(CAJ 2432Z)		1		1								
COMPRESSOR	P2R5700100		(SK1A1C-L2W)	1		1									
CONDENSER COIL	P5F1400100	CU						1		1					
CONDENSER COIL	P2R4500100	CU		1		1									
CONDENSER COIL	P2F4500100	CU			1		1								
CONDENSER COIL	P8R4500100	CU							1		1	1		1	
CONDENSER COIL	P8F4500100	CU											1		1
EVAP COIL	P5R4000100	CU		1	1	1	1	1		1					
EVAP COIL	P5F4000100	CU							1		1				
EVAP COIL	P8R4000202	CU										1		1	
EVAP COIL	P8F4400100	CU											1		1
FILTER DRYER	P994100100			1	1	1	1	1	1	1	1	1	1	1	1
PRESSURE SWITCH	P8F6200300	CU		1		1		1		1		1		1	
PRESSURE SWITCH	P8F6200600				1		1		1		1		1		1

7.REPLACEMENT OF MAIN COMPONENTS

7-1. TOP GRILLE PART

A. Unscrew the screw located on both side of top grille (t) with the top grille (t) fixture.



B. Hold up the top grille (t)



C. Unscrew the screw located on both side of top grille (b).



D. Unscrew the screws located on the top grille fixture under the top grille(b).



E. Pull out the harness display pcb and harness grille door s/w located on back of top grille (b).



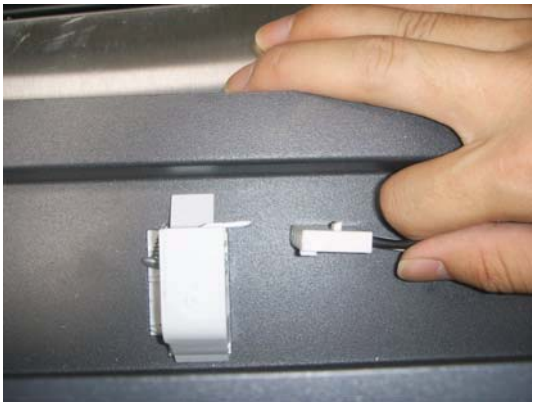

You can replace the door switch, mascot, key, front pcb. and front pcb. case, etc.

7-2. CONTROL BOX PART

- Power relay
- Trans former
- Main pcb

A. Disassemble top grille (t) as described section 7-1 A B.

B. Pull out all connectors connected with control box.

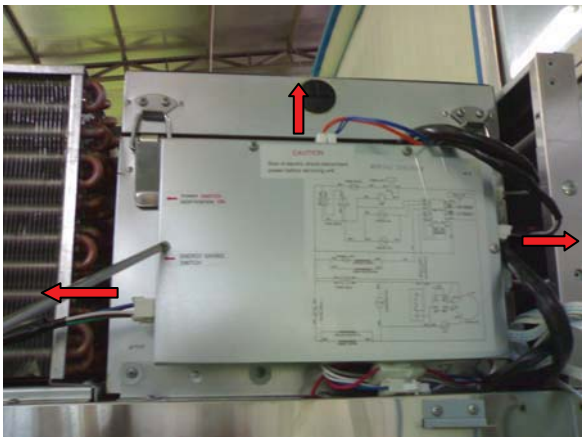

C. Unscrew the screws located on front of evap-housing.



D. Unscrew the screws located on elec box.



E. Pull out the harness main.

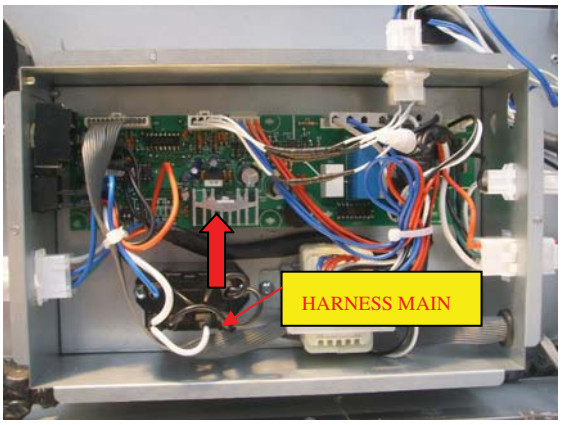

F. Unscrew the screws used in fixing power relay and trans former.





G. Disconnect the main pcb fixture.

Then you can replace the power relay, trans former and main pcb.

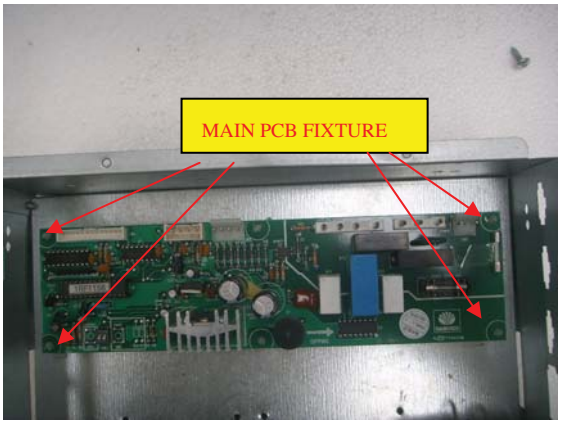

REPLACEMENT OF MAIN COMPONENTS

7-3. REPLACE DOOR

7-3-1. REPLACE DOOR (PRO-26R, PRO-26F,PRO-50R,PRO-50F,PRO-77R,PRO-77F)

A. Disassemble top grille (t) and top grille (b) as described section 7-1.

B. Unscrew the top hinge (L).



C. Lift the door (L) and pull it out.



D. Replace the door with the new one. First putting the door into bottom hinge,then put top hinge shaft into the spring bar as an angle with the door for keep elasticity.

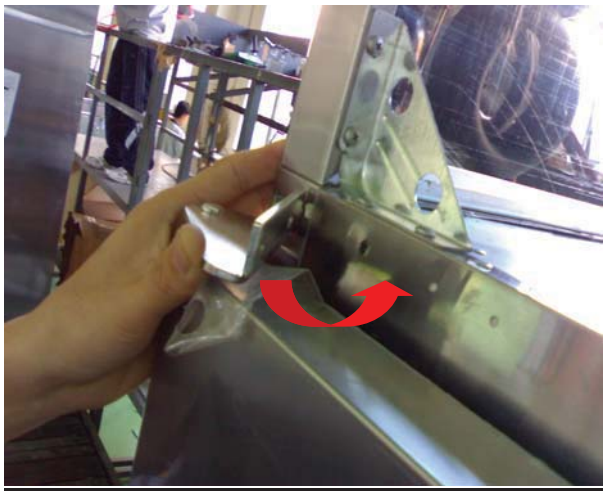

F. Screw the top hinge (L). (this process is opposite to disassemble them.)



G. Do just like above instructions in replacing the door (R).

7-3-2. REPLACE DOOR (PRO-26-2R,PRO-26-2F,PRO-50-4R,PRO-50-4F,PRO-77-6R,PRO-77-6F)

A. Disassemble top grille (t) and top grille (b) as described section 7-1.

C. Unscrew the top hinge (L) as 7-3-1.



D. Lift the door (T) (L) and pull it out.



E. Unscrew the middle hinge (L).



F. Lift the door (U) (L) and pull it out.



Then you can replace new doors and assemble them, those processes are opposite to disassemble them.

G. Do just like above instructions in replacing the door (T)(R) and the door (U)(R).

REPLACEMENT OF MAIN COMPONENTS

7-4. REFRIGERATION COMPARTMENT'S PART

- Lamp
- F/T-sensor and D-sensor
- Defrost heater (freezer only)
- Evaporator fan motor and fan blade

7-4-1. REPLACE LAMP

A. Unscrew the screws of lamp cover.



B. Pull out the lamp socket and lamp



You can replace the lamp now.

7-4-2. REPLACE F/T SENSOR AND D SENSOR (F-SENSOR IS ORANGE COLOR, T-SENSOR IS WHITE AND D-SENSOR IS BLUE)

A. Disassemble the duct cover

B. Unscrew the screws located on sensor cover and pull out the F/T-sensor from the sensor guide.



C. Open the evap. housing cover.



E. Disconnect the connector of ass'y sensor(R)(D) and replace the new one.



7-4-3. REPLACE THE EVAPORATOR COIL, THERMAL FUSE

A. Welding off the connection suction pipe(A) and Capillary.

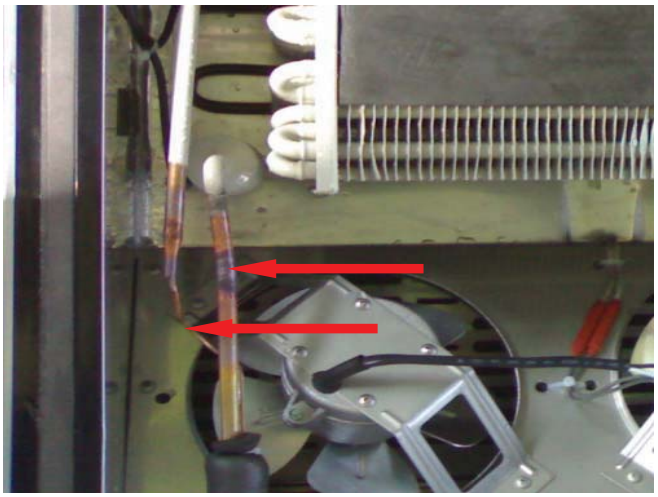

B. Unscrew the screw located on front and back side of evap. housing.

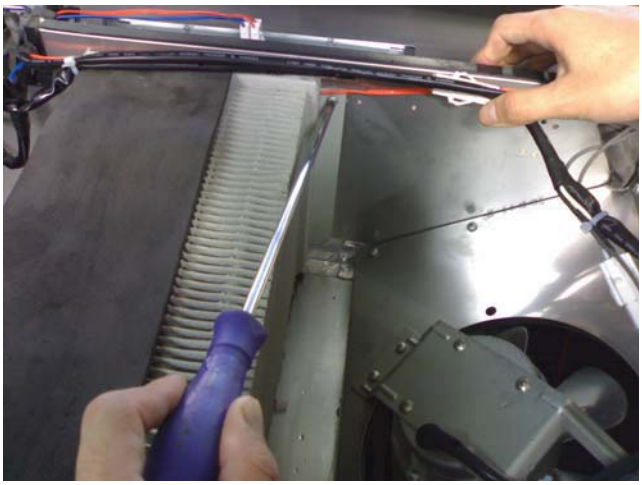

C. Lift the evaporator up.

d. Disconnect the connectors of thermal fuse and replace the new one.(freezer only).

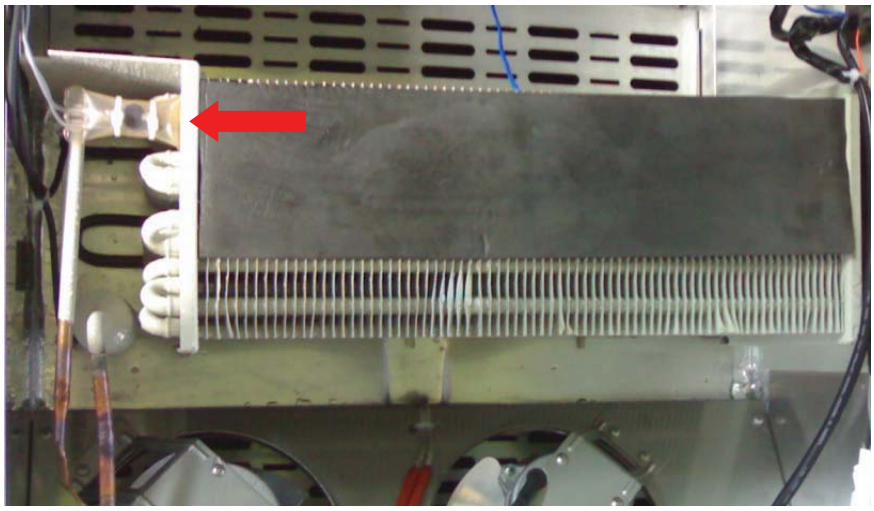

REPLACEMENT OF MAIN COMPONENTS

7-4-4. REPLACE THE DEFROST HEATER (FREEZER ONLY)

A. After lift the evaporator up, disconnect the connectors with harness defrost heater and disassemble the heater fix spring and split the hooks of the evap..



B. Replace the new defrost heater and fix it with heater fix spring.

7-4-5. REPLACE THE EVAPORATOR FAN MOTOR AND FAN BLADE

A. After lift the evaporator up, unscrew the screw which used in fixing motor fixture.

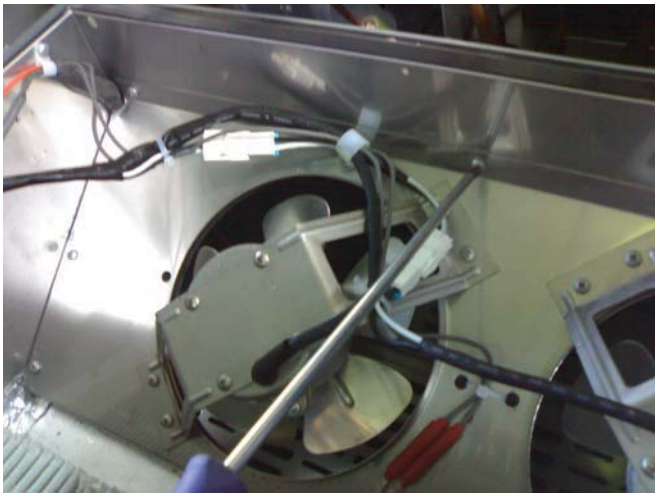

B. Disconnect the connectors of harness motor.

Then you can replace the evaporator fan motor and fan blade.

7-5. CONDENSER UNIT

- Compressor
- Condenser coil
- Condenser fan motor
- Dryer filter
- Pressure switch

The comp. Base is located on both side of the top of the cabinet by screw, and you can replace the Compressor ,Condenser coil Condenser fan motor, ETC. on it.

7-6. REPLACE THE CABINET HEATER AND MULLION HEATER

A. Disassemble the liner frame cover with the and edge of '—'type screwdriver.(left/right/top/bottom side)



B. Disconnect the cabinet heater and pull it out.

You can replace the cabinet heater with the new one.





C. Assemble the liner frame cover.(left/right/top/bottom side)



D. Disassemble the mullion frame cover(v) with the and edge of '—'type screwdriver.



E. Unscrew the screw located on both side of the mullion.



F. Take apart the mullion out cover(v) from the mullion, then disconnect the harness mullion heater.





REPLACEMENT OF MAIN COMPONENTS

G. Change the old mullion heater(v) and install the new one with the gap between wires 1.2 inch.

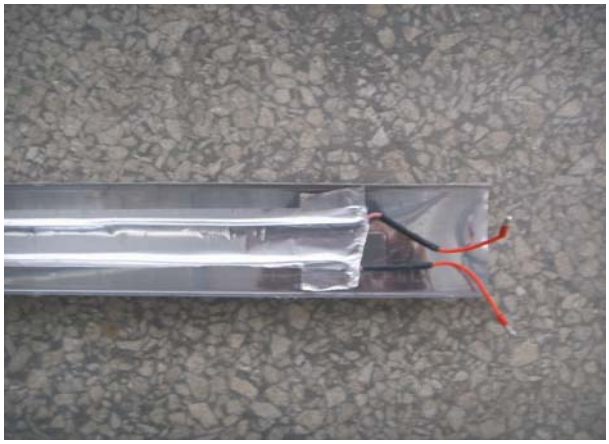

H. Insert the mullion out cover(v) into the original position, then screw it on both side of the mullion.(this process is opposite to disassemble the mullion out cover(v))

J. Assemble the mullion frame cover(v).(this process is as alike as assembling the liner frame cover)

K. Do just like above instructions in replacing mullion heater(h).
(PRO-26-2R,PRO-26-2F,PRO-50-4R,PRO-50-4F,PRO-77-6R,PRO-77-6F only, but before replacing mullion heater(h), doors should be disassembled.)













