Hotpoint

LARDER FRIDGE - MODELS RLA34,RLA36,RLM34,RLM36
INSTRUCTIONS FOR INSTALLATION & USE

GETTING STARTED: To ensure that your fridge runs reliably and efficiently follow these steps.

STEP 1

Choose a location for your fridge, away from any heat sources and allow adequate ventilation - 30mm (1¼ inch) gap above.



STEP 2



Move the fridge into position, using the sides of the cabinet. Take care to avoid damaging the refrigerant circuit pipe work on the rear.

STEP 3

Level the fridge by adjusting the front feet. This will stop rocking or vibration and keep the door aligned.



STEP 4



Before plugging in and switching on, leave the fridge in its final location for at least 15 minutes to allow it to settle.

STEP 5

Plug in and switch on.
Allow the fridge to cool before placing food inside.
All food in the fridge should be covered.



STEP 6



Your fridge is now working.
If after 24 hours your fridge is not operating as you want, refer to the Troubleshooting section.

Read the rest of these instructions to get the best from your appliance and remember to fill in your guarantee registration.

Keep this Book in a safe place for quick reference.

For Your Safety

For your safety, read the following advice:

The fridge cooling system contains a small amount of gas which is environmentally friendly but flammable. To avoid any risk :-

- Install the fridge following the installation instructions and ensure that ventilation openings are kept clear of obstruction.
- Take care when installing or moving the fridge to avoid damaging the pipes on the rear.
- If you suspect a leak, do not switch on the fridge, but open the windows and doors to ventilate the room.
- Do not use any mechanical or electrical devices inside the fridge, for instance for manual defrosting.
- Only use this fridge for storing domestic foodstuffs.

When installing your fridge :-

- Ensure that the mains cable is not trapped underneath or behind the fridge when you install or move it.
- Do not stack any other appliance on top of this fridge as they may damage the fridge or become unstable.

When using your fridge :-

- Do not sit or stand on top of your fridge.
- Do not store poisonous, flammable or dangerous substances in your fridge.
- Do not use aerosol sprays for defrosting or cleaning your fridge.

If you sell the fridge, pass on this booklet to the new owner.

Installation

Location & Air Circulation

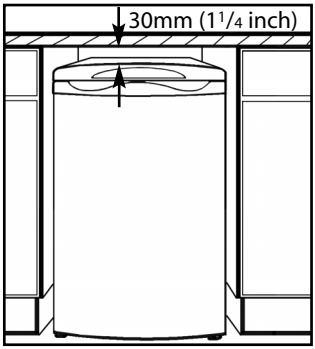

Locate your fridge away from sources of heat e.g. cookers, radiators, direct sunlight as extreme temperature will affect its performance.

Allow a minimum 30mm (1¼ inch) between the top of the fridge and the underside of the worktop.

Providing you follow the recommended ventilation requirements you will :-

- Prolong the life of the fridge.
- Minimise the risk of condensation on the outside of the fridge.
- Minimise the running costs.
- Minimise operating sounds caused by vibration.

Minimum space required to open door

The fridge needs a space of 600mm (24 inches) in front to allow the door to open. When positioning the fridge next to a unit, a gap of 30mm (1¼ inch) can be left at the hinge side of the door to allow the easy removal of furniture. If preferred the fridge can be positioned so that a gap is not left. This will restrict how far the door can be opened but the furniture can still be removed (see diagram below). The door hinge side can be changed to make it easier to open (see '*Door Reversal*' in the CLEANING & MAINTENANCE section).

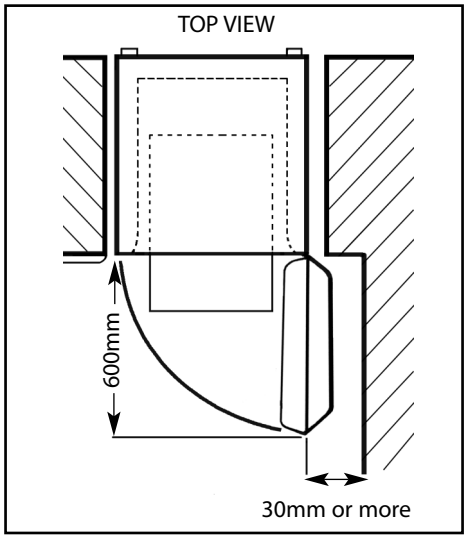

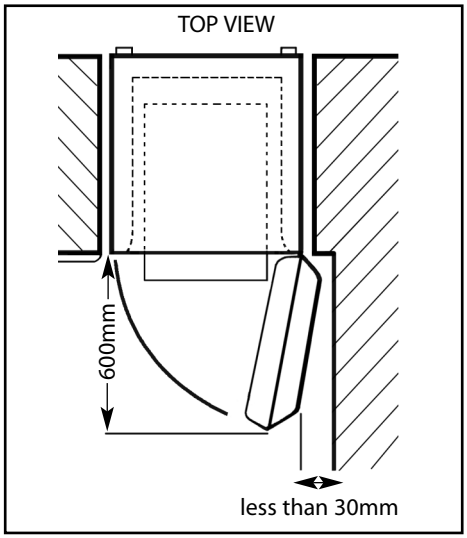

Installation

Levelling:
Level the fridge when it is in its final location by adjusting the front feet, until firm contact is made with the floor. This will stop rocking or vibration and keep the door aligned which helps the fridge run reliably and efficiently.

Before plugging in and switching on, leave the fridge standing in its final location for at least 15 minutes to allow it to settle.

Fitting a Fridge under a Work Top
To minimise running costs Hotpoint recommend fitting a vent to the rear of your worktop, which is available from Hotpoint Genuine Parts & Accessories Mail Order Hotline (see KEY CONTACTS, back page).

WARNING: If there is less than 30mm clearance above the fridge, a vent must be fitted to provide adequate ventilation above your fridge.

Bottle Retainer:
To fit the bottle rack retainer:

Locate the retainer groove at one end of the bottle rack and then gradually press down along the top edge until the retainer is fully in the home position.

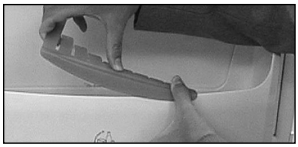

Installation

Electrical Supply

WARNING: This appliance must be earthed.

The fridge must be positioned so that the plug is accessible after installation.

Fuses
Your appliance comes fitted with a plug and a 13A fuse. If you need to replace the fuse, only use those rated at 13A and ASTA approved to BS1362.

Changing the Plug
Cut off and dispose of the supplied plug if it does not fit your socket.

WARNING: To avoid a shock hazard do not insert the discarded plug into a socket anywhere else.

IMPORTANT WIRES IN THE MAINS LEAD ARE COLOURED IN ACCORDANCE WITH THE FOLLOWING CODE :

Green/Yellow - Earth

Blue - Neutral

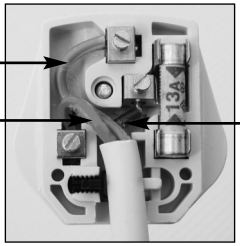

Brown - Live

If you change the plug, the colour of wires in the mains lead may not correspond with the colour of the markings identifying terminals in the plug. You should therefore wire it as shown above.

Changing the Mains Lead
This fridge is fitted with a special mains lead. If you need to replace the mains lead due to damage, one can be bought from Hotpoint Service (see KEY CONTACTS, back page). It is strongly advised that this work is carried out by a qualified electrician.

CE Marking certifies that this appliance conforms to the following EEC directives : Low Voltage Equipment - 72/23/EEC & 93/68 EEC Electromagnetic Compatibility 89/336/EEC, 92/31/EEC & 93/68/EEC

Controls

Controlling the Temperature of the Fridge Compartment

The control wheel on the front of the worktop adjusts the internal fridge compartment temperature. The internal temperature should be 5˚C or colder although some sections, such as the salad bin, will be slightly warmer.
The setting of the control wheel will depend on the location of the fridge, the room temperature and how often the door is opened. The normal set point (marked by a 3 and N on the dial) is usually suitable. If you need to adjust the temperature turn the control wheel:

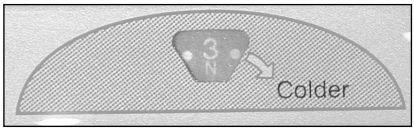

Clockwise (higher number) - **Colder**
Anti-clockwise (lower number) - **Warmer**

Temperature Indicator
(not applicable to all models)

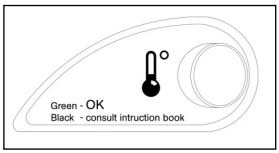

The temperature indicator is located on the bottom right hand side of the refrigerator wall.
This indicator shows when the refrigerator compartment of your larder fridge is operating at the correct temperature.

After plugging in and switching on PLEASE WAIT 24 HOURS for the refrigerator compartment temperature to stabilise. After this time the indicator should clearly show OK and that indicates the refrigerator compartment is operating at the correct temperature.

If the indicator is completely black, the compartment temperature is too high and you should adjust the temperature wheel to a colder setting (see above).

If you have to adjust the temperature setting please WAIT A MINIMUM OF 10 HOURS, this is time for the temperature to stabilise before checking that the indicator is showing OK.
If large quantities of food have been added or if the refrigerator door has been opened frequently it is normal for the temperature indicator not to show OK. WAIT A MINIMUM OF 10 HOURS before adjusting the temperature setting to a colder position.

You can check the temperature of the fridge compartment by using a Fridge Freezer Thermometer available from Hotpoint Genuine Parts and Accessories Mail Order Hotline (see KEY CONTACTS back page).

WARNING: Do not use a mercury filled thermometer, as breakage would cause a health hazard.

Your fridge must NOT be placed in a room where the temperature goes below 6˚C or above 38˚C for prolonged periods, as the internal fridge temperature will not be maintained.

Useful Advice

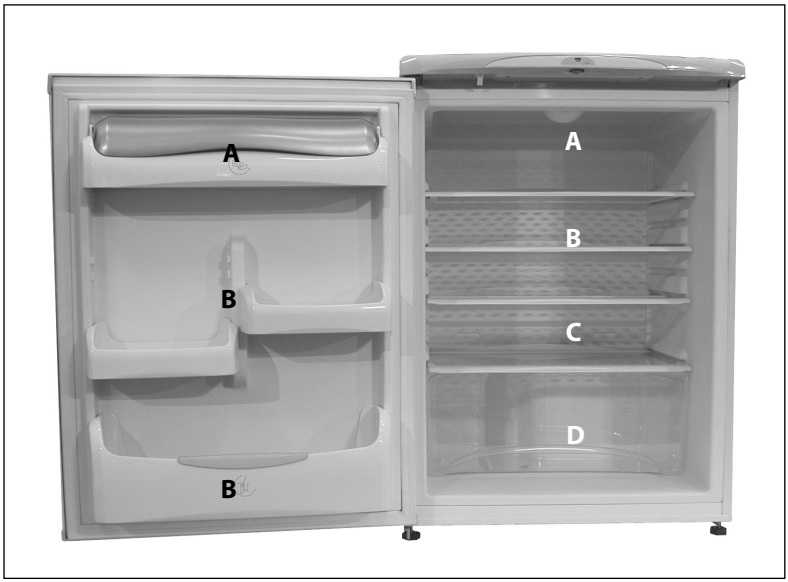

Note:
The Rating Plate, which lists the appliance Model Number and Serial Number can be found near the bottom of the left hand internal wall.

STORAGE ZONES

Zone	Type	Food Storage
A	Cool	Dairy products, Cheese, butter, margarine, Low fat spreads, cooking fats / lards Preserves - Jam, curd, marmalade, spread, salad dressing or sauces.
B	Colder	General food storage
C	Coldest	Meat fish & poultry Pre-cooked / chilled food
D	Salad Bin	Vegetables, fruit and salad items (Not recommended for the storage of bananas or onions).

Useful Advice

Making the best use of your Fridge

Note : Always use the handle provided to open the fridge door.

To ensure that your fridge operates as efficiently as possible :

- Follow food packaging "best before/use by" instructions or your suppliers advice on a suitable maximum storage time.
- Keep foods covered to retain moisture and prevent flavour/odour transference. Plastic bags, aluminium foil, plastic stretch wrap and containers with lids are ideal.
- Avoid opening the doors unnecessarily or for longer than needed.
- Allow hot or warm food to cool down in covered containers before placing in fridge, as placing hot food inside reduces efficiency.

Storing Food in a Fridge

- Pack and store cooked and fresh food separately.
- Wrap raw or defrosting meat and poultry in polythene or foil and store below cooked foods and dairy products to avoid contamination of dripping food juices.
- Wrap cheese in greaseproof paper and place in an airtight container or polythene bag.
  Bring to room temperature before consuming.
- Empty left over canned food into a covered storage containers before placing in the fridge.
- Position food to allow cold air to circulate freely, ensuring nothing comes into contact with the interior back wall of the fridge, or covers the defrost gutter drain hole below this.
- Use the different storage zones inside your fridge compartment to store a wide variety of food items.

Microban®
antibacterial protection

Microban® is a unique antibacterial technology which is built into interior components of your fridge during manufacture. **Microban®** protects against growth of potentially harmful and odour causing bacteria on the interior fridge surfaces, thereby keeping your fridge fresher and more hygienically clean during use. **Microban®** will not wash out or wear out and will provide continuous protection against bacteria for the life of your fridge. **Microban®** technology has been proven safe, durable and effective over many years of use in personal care and household consumer products. In addition, Hotpoint operate a rigorous antibacterial testing programme through approved independent testing laboratories.

Note : You should continue to clean your fridge as recommended (see CLEANING & MAINTENANCE section). Microban® provides an extra level of hygiene protection in your fridge in between cleanings.

Useful Advice

Advice on Adjusting Shelves
Make the most of the interior storage space by repositioning shelves to suit the various heights of individual items you wish to store.

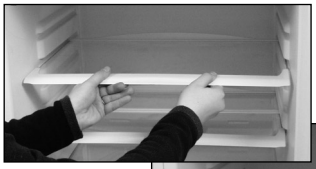

To remove, ensure that the door is open fully.
Slide the shelf forward and tilt from position.





Split glass shelf
The split shelf can be used as a standard shelf but also as two half shelves.
The front half can be repositioned above or below to enable storage of larger items.



Note : Only the front half of the shelf can be repositioned, the back half must remain in its original position.

Salad Bins
For the storage of fruit, vegetables and salad items.
When storing vegetables, remove unusable leaves and soil and leave lettuce, cabbage and cauliflower on the stem.
It is advisable to clean the salad bin regularly, it can be removed by sliding it out from position.

Note : Care must be taken to ensure that the salad bin is closed before shutting the fridge door.

Commodity and Bottle Racks
Commodity racks can be repositioned in the door to suit your storage requirements.
The lidded commodity rack is recommended for the storage of dairy items, such as butter, margarine and cheese.
To remove, lift rack vertically to release from fixing supports.
To replace, align grooves on either side of the rack above fixing supports and push down until secure.

In order to get the best results from the bottle retainer it is advised that it be positioned centrally on the bottle rack.

Egg Rack
The egg rack can be used in conjunction with any commodity rack and is easily removed for cleaning.

Note: Wipe, don't wash eggs.

Defrosting and Cleaning

No manual defrosting required
The fridge compartment will defrost automatically. During defrost periods water droplets form on the interior back wall of your Larder Fridge and refreeze afterwards. Note : if your kitchen becomes exceptionally warm, your Larder Fridge may not defrost regularly.

WARNING: Ensure the defrost drain hole is kept clear and that stored food does not come into contact with the interior back wall of your Larder Fridge.

Cleaning
WARNING: Switch off electrical supply and pull out mains plug before cleaning.

Interior
1. Remove food and wrap or cover to keep it cool.
2. Remove salad bins, racks and shelves from the fridge compartment and wash in warm water and washing up liquid using a soft cloth, dry thoroughly. ***Note : It is important to ensure that cleaned shelves, baskets and bins are thoroughly dried before refitting to the fridge compartment.***
3. Wipe interior and fitting with a clean cloth wrung out in a solution of either one teaspoon of bicarbonate of soda to one pint of water or Milton™ sterilising fluid, diluted according to the manufacturer's instructions.
4. Dry interior thoroughly with a clean cloth before replacing fittings and food.

Exterior
Use a clean soft cloth wrung out in warm water and washing up liquid to wipe the exterior surface, dry thoroughly.

WARNING: Do not use abrasive powder, household cleaner, bleach or wax polish to clean your fridge, they leave a smell in the fridge and can damage the exterior.

Use a soft brush or vacuum cleaner to remove dust from underneath the fridge and from the compressor and condenser situated at the back of the fridge.

WARNING: Do not damage the pipework.

Door Seal
Use warm water and a clean soft cloth to wipe along and in between the creases of the door seal, dry thoroughly. Take care not to damage the seal and avoid using sharp objects.

WARNING: Do not use detergent, it will damage the seal.

Defrosting and Cleaning

Going Away
If you are going away and don't want to use your fridge, switch off the socket outlet and pull out the mains plug. Remove food and follow the cleaning instructions on the previous page.

Note : Leave the door ajar to prevent an accumulation of odours.

Changing the Light Bulb

WARNING: Switch off at socket outlet and pull out the mains plug

Obtain a replacement SES 15W bulb from the Hotpoint Genuine Parts and Accessories Mail Order Hotline (see KEY CONTACTS back page) and fit as follows :

1. Remove any shelves from directly below the interior light, to make access easier.
2. Squeeze the side of the lamp guard lightly to unclip. Remove and retain.
3. Remove old bulb and fit new one.
4. Refit lamp guard.
5. Plug in and switch on electrical supply.

Maintenance

You will need a selection of small hand tools, screwdrivers, spanners etc. to carry out this procedure.
Our Service Department can arrange for an Engineer to do the conversion for you but a charge will be made.

Door Reversal

WARNING: Switch off electrical supply and pull out the mains plug.

Remove loose items/fittings from inside the fridge and place food into insulated containers whilst carrying out this operation.

1. Open the door as wide as possible.
   Note : You may require assistance to do this:



2. Support the door and using a screwdriver, remove the screw securing the top hinge.
3. Carefully tilt the door to remove the hinge from the cabinet and lift the door off the bottom hinge.
4. Remove the spacing washers from the bottom hinge.
   Note : You may require assistance to do this:
5. Using the packaging from the appliance or a suitable substitute to support the back of the appliance. Lay the appliance on it's back ensuring the pipework at the back is not damaged or bent. **Be careful that the appliance does not run away from you when the wheels touch the floor.**
6. Unscrew the foot plate and hinge bracket fitted to the bottom right hand side of the appliance. Unscrew the foot and footplate fitted to the bottom left hand side of the appliance.
7. Refit the hinge bracket and the footplate to the opposite sides of the appliance. Screw in the feet until there is approximately 35mm projecting from the bottom front edge of the appliance.
8. **Lift the appliance onto it's feet.** ***You may require assistance to do this:*** Lift the appliance from the rear of the tabletop and stand it on it's feet and wheels. **Be careful that the appliance does not run away from you when the wheels touch the floor.**
9. Using a thin blunt instrument, remove the hinge bush cap from the top left of the door and refit on the top right.



10. If applicable - using a screwdriver, remove the door stop from the bottom right of the door and refit on the bottom left.



   Note : You may require assistance to do this:
11. Replace the top hinge onto the door, slide the door onto the bottom hinge pin and support the door whilst screwing the top hinge into position. Ensure that the top hinge bracket is positioned correctly.
12. Adjust the front feet (see 'Levelling' SAFETY & INSTALLATION section).

Note : Let the appliance stand upright in it's final location for at least 15 minutes before plugging in and switching on the electricity supply.

Troubleshooting

IS THE FRIDGE WORKING AS YOU WANT?

Have you read through the instruction book ?
If you still have a problem, before calling our service organisation see if any of the tips below help.

The appliance will not work

1. Check plug is firmly positioned in the socket outlet and the power supply is switched on.
2. Check power supply with another appliance.
3. Check fuse/circuit breaker.
4. Check the door is closed properly.

The appliance is making a lot of noise

1. Check that the rear pipe work is clear of the wall, skirting board and other obstacles.
2. Check that all feet/wheels are firmly in contact with the floor and the fridge is level.
3. See OPERATING SOUNDS below.

The temperature is too warm

1. Turn the control wheel to a higher number. See CONTROLS section.
2. If the appliance is close to a heat source, move it to another location.
3. Check that there is enough ventilation around the appliance.
4. Check that the door has been closed properly.

The temperature is too cold

1. Turn the control wheel to a lower number. See CONTROLS section.

There is water beneath the salad bin and on the floor

1. Check defrost gutter drain hole is not covered.
2. Check that nothing has come into contact with the interior back wall of the fridge.

The interior light doesn't work

WARNING: Switch off the socket outlet and pull out the mains plug.

1. Check bulb is screwed in correctly. If still not working then see 'Changing the Light Bulb' in the CLEANING & MAINTENANCE section.

Ice builds up rapidly inside the fridge

1. Check that nothing is stopping the door from closing properly.
2. Check that foods and liquids are covered to avoid the build up of moisture inside.
3. See 'Defrosting' in the CLEANING & MAINTENANCE section for advice.

If there is still a problem contact Hotpoint Service (See KEY CONTACTS, back page, for contact details).

OPERATING SOUNDS OF A FRIDGE

These are the normal types of sound that your fridge will make:

The fridge motor (compressor) makes a buzzing or humming sound when it is running. This can be louder when it is first switched on. This sound will reduce over the first few months.

Gases flowing through the pipes can produce gurgling, bubbling, roaring or humming noises.

The temperature control can make a clicking noise when it turns the motor on and off.

Expansion and contraction of parts inside the fridge can produce a cracking noise as they rapidly change temperature.

Hotpoint guarantee

"Satisfaction guaranteed or your money back"

We give you a unique 'satisfaction guaranteed' promise - **valid for 90 days -** after you have purchased your Hotpoint appliance. If there is a technical problem simply call Hotpoint Repair service or visit our web-site at www.hotpointservice.co.uk and where necessary, we will arrange for an engineer to call. If the technical problem is not resolved under this guarantee, **we will replace your machine or, if you prefer, give you your money back.**

All Hotpoint appliances carry a fully inclusive 12 month parts and labour guarantee as well as free replacement parts for the first 5 years (except microwaves, selected integrated appliances and cooker hoods, which have a one year guarantee) provided that they are fitted by a Hotpoint engineer.

Guarantee terms and conditions

Your guarantee is only applicable in the United Kingdom or Republic of Ireland and is subject to the following provisions that your appliance:

- Has been installed and used correctly in accordance with this instruction booklet.
- Has been used solely for domestic purposes and is located on domestic premises (ie. not for commercial or trade use).
- Has been properly connected to a suitable electrical supply voltage as stated on the appliance rating plate.
- Has not been subject to misuse, accident, modified or repaired by anyone other than a Hotpoint service engineer.

For pre purchase information on any other Hotpoint product call: 08448 24 24 24
or visit: www.hotpoint.co.uk

Disposal of old electrical appliances

The European Directive 2002/96/EC on Waste Electrical and Electronic Equipment (WEEE), requires that old household electrical appliances must not be disposed of in the normal unsorted municipal waste stream. Old appliances must be collected separately in order to optimise the recovery and recycling of the materials they contain and reduce the impact on human health and the environment.



The crossed out "wheeled bin" symbol on the product reminds you of your obligation, that when you dispose of the appliance it must be separately collected.
Consumers should contact their local authority or retailer for information concerning the correct disposal of their old appliance.



Recycling & Disposal Information

As part of Hotpoint's continued commitment to helping the environment, Hotpoint reserves the right to use quality recycled components to keep down customer costs and minimise material wastage.

Please dispose of packaging and old appliances carefully. Old refrigerant and oil must be disposed of in a safe and environmentally friendly manner, using suitably qualified personnel.

To minimise risk of injury to children, remove the door, plug and cut mains cable off flush with the appliance. Dispose of these parts separately to ensure that the appliance can no longer be plugged into a mains socket, and the door cannot be locked shut.

Hotpoint

After Sales Service

"No company is better positioned to offer an after sales service on a Hotpoint appliance than us - the manufacturer"

As part of our commitment to you, all Hotpoint appliances have the added benefit of a fully inclusive parts and labour guarantee for the first 12 months. In addition to this you also have the advantage of **free replacement parts for the first 5 years** when fitted by a Hotpoint engineer. When the 12 months parts and labour guarantee expires we offer the following after sales service options:

Repair Service and Information Help Desk
UK :08448 224 224
www.hotpointservice.co.uk
Republic of Ireland: 0818 313 413
Note: Our operators will require the Model number and the Serial number of your appliance (see USEFUL ADVICE SECTION for rating plate position).

Available 364 days a year with a fast, effective and value for money service. We have the largest white goods repair service in the UK with over 1000 of our own fully trained engineers. All repairs include a parts and labour guarantee for 12 months from the date of the repair.
If you require any information or have any questions about your appliance, our operators are on hand with help and advice.
All this ensures that you will receive the best available after sales service possible.

Extended Warranties
UK: 08448 226 226
www.hotpointservice.co.uk
Republic of Ireland: 01 230 0233

Whether you have just one or a number of Hotpoint appliances in your kitchen, we offer two service cover plans to give you total peace of mind.

- Repair Protection Plan - FREE service repairs for a single Hotpoint appliance during the period of cover.
- Kitchen Cover - FREE service repairs for all your Hotpoint appliances less than 8 years old.

Genuine Parts and Accessories
UK: 08448 225 225
www.hotpointservice.co.uk
Republic of Ireland: 0818 313 413

A wide range of genuine parts and accessories are available from our hotline or through our web site.
Genuine parts and accessories, extended warranties and service repairs are all available on our web-site at:
www.hotpointservice.co.uk

Hotpoint

Key Contacts

After Sales Service

Over 1100 trained specialists, directly employed by us, ensure that you can have complete confidence in both the appliances and services we offer.

Repair Service and Information Help Desk

UK: 08448 224 224
Monday to Friday, 8am to 7.30pm
Saturday, 8.30am to 5.30pm
Sunday, 9.30am to 3.30pm
www.hotpointservice.co.uk

Republic of Ireland: 0818 313 413

Note: Our operators will require the following information:

Model number

Serial number

See USEFUL ADVICE SECTION for rating plate position

Extended Warranties

UK 08448 226 226
Monday to Sunday, 8am to 8pm
www.hotpointservice.co.uk

Republic of Ireland: 01 230 0233

Genuine Parts and Accessories

UK: 08448 225 225
Monday to Friday, 8.30am to 5pm
Saturday, 8.30am to 12noon
www.hotpointservice.co.uk

Republic of Ireland: 0818 313 413

www.hotpoint.co.uk

Indesit Company UK Limited, Morley Way, Peterborough, PE2 9JB

PRINTED BY **SIMLEX** · FOUR ASHES, WOLVERHAMPTON.

195051328.01
12/2010