Vinotemp®

WINE CELLAR

VT45

INSTRUCTION MANUAL

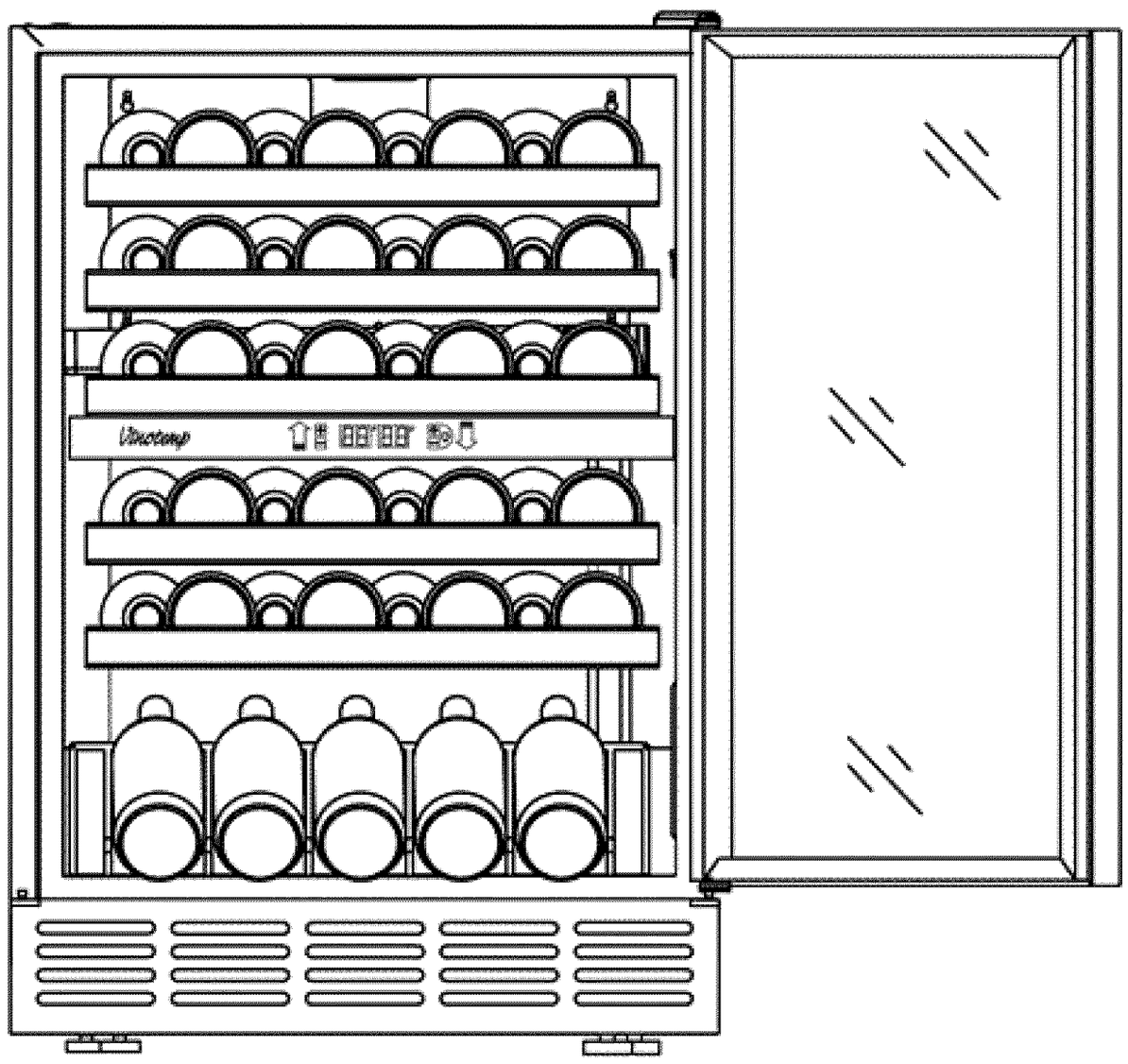

LOS ANGELES CA

TABLE OF CONTENTS

FEATURES 1

DESCRIPTION..... 1

INSTALLATION..... 2

IDENTIFICATION OF PARTS..... 3

REVERSAL OF DOOR SWING..... 3

INSTRUCTION FOR CORRECT AND EFFICIENT USE..... 4

PACKAGING AND TRANSPORTATION..... 5

CAUTIONS FOR OPERATION..... 5

MAINTENANCE AND TROUBLESHOOTING..... 6

LIMITED WARRANTY..... 7

CIRCUIT DIAGRAM..... 11

FEATURES

- ✧ Approximately 45-bottle holding capacity.
- ✧ **ZERO CLEARANCE "BUILT-IN" DESIGN:** Lower front inlet and exhaust grill enables installation in areas including but not limited to kitchen cabinets, kitchen islands and formal display areas. Must leave clearance in front of the unit.
- ✧ **Two storage compartments** that provide proper storage climate for white wines and red wines. The temperature zone for white wines vary from 45°F-54°F (7°C-12°C), and that for red wine is from 54°F-65 °F (7°C-18°C), so all your wines will taste great when you serve them.
- ✧ Simple and reliable temperature adjustment mode to get the ideal temperature for your special blend.
- ✧ An **interior light** will highlight your personal display.
- ✧ **Adjustable legs** ensure proper leveling and proper installation, which will provide reliability of your new wine cellar.
- ✧ All units are **CETL** certified to ensure safety compliance and long term durability and service life.
- ✧ Normal operation environment: 60.8°F-89.6 °F (16°C-32°C)
- ✧ Unit is not designed for use in the garage or other extreme environments.

DESCRIPTION

- ✧ The wine cellar was created for the modern family. The unique features of this wine cellar were designed to complement your modern decoration as well as to meet the needs of today' s ever growing number of wine connoisseurs. Recent statistics show an astonishing growth rate in wine demand and consumption in many countries around the world, and we believe the wine cellar will benefit many present and soon-to-be wine connoisseurs.
- ✧ This beautiful wine cellar is designed to allow a visual display of your private wine selection.

✧ We offer many different models that will satisfy most requirements, including those for the very serious wine connoisseur. Information on larger and more sophisticated units is available upon request or you may visit www.vinotemp.com.

INSTALLATION

✧ Install your wine cellar on a solid and level floor (other than carpet). This will ensure a vibration and noise-free operation. Adjust the leveling legs in and out accordingly to stabilize the wine cellar horizontally. If the legs are not properly adjusted, the wine cellar may be unstable and result in excess noise or vibration.

✧ It is not advisable to install the wine cellar directly adjacent to a kitchen sink as moisture from this location could cause premature corrosion to the components of your new wine cellar.

✧ Do not install your new wine cellar in direct sunlight or near a range of heat or oven. Such external sources of heat may affect the proper storage temperature and compromise the taste and features of your wine.

✧ Do not install your wine cellar in the garage or basement.

CAUTION: DO NOT USE EXTENSION CORDS!

WARNING: RISK OF CHILD ENTRAPMENT. Before you throw away your old cellar, take off the door. Leave the shelves in place so that children may not easily climb inside.

IDENTIFICATION OF PARTS

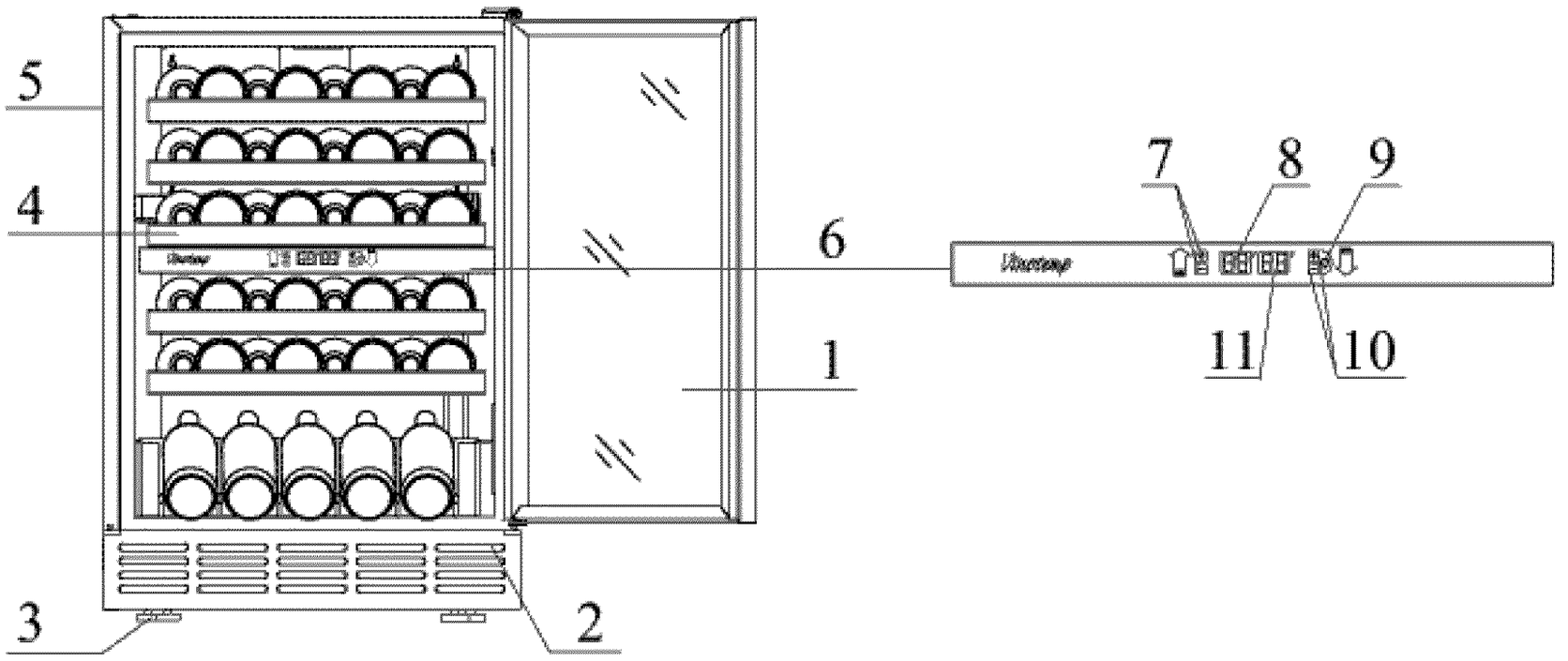

1. Glass Door
2. Grill
3. Adjustable leveling legs
4. Shelf
5. Cabinet
6. PVC Cover
7. Temperature adjustment (for upper shelves, white wines)
8. LED display (for upper shelves, white wines)
9. Light button
10. Temperature adjustment (for lower shelves, red wines)
11. LED display (for lower shelves, red wines)

REVERSAL OF DOOR SWING:

The door of the wine cellar could be opened either from the left or right side. The wine cellar, as delivered to you, is installed from the left side.

If you want to reverse the open direction of door, please do as follows:

1. Disconnect the power, take out all the wines and lay the wine cellar back on the ground. Please remember when finished reversing the door not to power up the unit for 24 hours to allow the coolants to settle in the compressor.
2. Remove top hinge cover. Use the special screw driver to remove the three screws on the top hinge, then lift up the door to take the door off.
3. Unscrew the two screws and remove the grill.
4. Remove the support wheel on the left bracket.

5. Use the special screw driver to unscrew the six screws on the right downward door axis and left bracket. Remove the support wheel on the left bracket and install it on the right bracket.
6. Install the right bracket and left downward door axis.
7. Remove the fixing screw on the door handle, then remove the handle and fix it on the right of the door.
8. Reinstall the door.
9. Install the top hinge on the other side.
10. Screw back in place the top hinge cover, grill and screw covers.
11. Install the support wheel on the right bracket.
12. You now have the door fully installed on your desired side.

INSTRUCTIONS FOR CORRECT AND EFFICIENT USE

✧ The wine cellar requires a power supply of **115V AC** and **60Hz**. Make certain that you connect the wine cellar to a proper voltage supply.

✧ **Two temperature zones** ensure the proper storage temperature for the right wine. Temperature adjustment of red wine and white wine are separate. White wines are stored in the upper three shelves of the cabinet. The temperature zone for white wines vary from 45°F-54°F(7.2°C-12°C). The white temperature set by the manufacture is 48°F (8.9°C); Red wines are stored in the lower three shelves of the cabinet. The temperature zone for red wines vary from 54°F-65°F (12°C-18°C). The red temperature set by the manufacture is 56°F (13.3°C).

✧ Temperature of white wine is controlled by left digital temperature control. Temperature of red wine is controlled by right digital temperature control.

✧ To increase the temperature to the desired level, Press the (+) button. To decrease the temperature to the desired level, Press the (-) button.

✧ To view the items inside, press the lamp button.

✧ Reduce the frequency of opening the door to conserve energy and maintain proper storage temperature inside. Do not keep the door open

for any longer than necessary.

- ✧ You may turn on the interior light to enhance the display of your fine wines. Please note that the light can produce some heat; therefore, extended or prolonged lighting can affect inner storage temperature.
- ✧ When the power is first turned on or when the power comes on again after an extended power outage, the wine cellar may run continuously for several hours in order to cool the entire cabinet to the normal operating temperature. When the interior temperature has stabilized, the wine cellar will enter the automatic control mode.
- ✧ Depending on location and usage, the wine cellar compressor may run more continuously on hot days, and run relatively less on cold days.
- ✧ If instructions are followed according to manufacturer’ s specifications, the compressor unit will offer **worry-free operation**.

PACKAGING AND TRANSPORTATION

- ✧ When unpacking unit for inspection, make certain that all parts are replaced in their original position for re-transporting to further destination.
- ✧ **Do not lay wine cellar on its side.** The angle between the cabinet and the ground should not be less than 45° .
- ✧ Do not handle or lift the wine cellar by its door.
- ✧ Collision and violent vibrations should be avoided during moving and transportation.

CAUTIONS FOR OPERATION

- ✧ When using wine cellar for the first time or after it has been moved, **wait for 24 hours before plugging in** to avoid damage to the compressor.
- ✧ After removing the power plug from the outlet, wait 5 minutes before plugging wine cellar in again to avoid damage to the compressor.
- ✧ Make certain the wine cellar is plugged into an **approved circuit or**

outlet. To prevent accidents, do not use in an overloaded circuit or outlet. The electrical outlet should have **proper ground fault protection.**

- ✧ Do not use this wine cellar if electrical supply outlet is questionable or does not conform to these instructions.
- ✧ Do not damage the insulation on the electrical cord or place weight on the cord. Consumers should not attempt to lengthen the power cord.
- ✧ Remove all packing prior to using the wine cellar to ensure proper operation.
- ✧ Explosive containers or hazardous chemicals cannot be stored in the wine cellar under any circumstances.
- ✧ Temperature fluctuation is normal.
- ✧ Be careful not to pour water or other liquids on the wine cellar. **Moisture on the electrical wires or components could cause electrical shock.**
- ✧ Do not place heavy objects on the wine cellar or its door, as excessive weight may affect its stability and cause the wine cellar to topple over.

MAINTENANCE AND TROUBLESHOOTING

- ✧ The wine cellar does not get cold at all:

  Check to ensure the power plug is installed properly. Check the main power supply to make certain a fuse has not blown or the main circuit breaker has not tripped off.
- ✧ The wine cellar does not get cold enough:

  Is the temperature set above 54°F(12°C)? Is the door being opened and closed too frequently? Is vent free from any obstruction?
- ✧ The wine cellar is noisy:

  Make certain the unit is properly leveled and standing firm. You may have to adjust the leveling legs. Also check to see if there may be another source of noise nearby.

✧ **THE FOLLOWING ARE NOT MALFUNCTIONS:**

Because of refrigerant circulation in evaporator, a common sound similar to running water may sometimes be heard when the compressor is operating. Sometimes there is a pit-a-pat sound when operation starts or stops.

LIMITED WARRANTY:

Vinotemp International ("Seller") and the person or entity that acquires these goods from Seller ("Purchaser") hereby fully agree to the following terms and conditions of the sale: Shipping fees are the responsibility of the Purchaser whether freight prepaid or freight collect. Seller assumes no responsibility for the goods sold to the Purchaser once the goods have left the Seller' s premises, including, but not limited to, late delivery by the moving carrier, or for events caused by any difficulty carrier incurs in attempting to fit the goods into the Purchaser' s place of business or residence due to the size of the goods or otherwise, such as the disassembly and reassembly of the goods. Purchaser assumes all responsibility for delivery, payment of freight, access, measurement, installation, hook-up, moving and storage of the goods. The transportation of all goods is subject to the terms and conditions which the moving carrier imposes on Purchaser including, but not limited to, additional charges imposed per flight of stairs, and/or additional charges resulting from the carrier' s inability to safely and/or adequately use the building elevator to lift the goods to an upper floor. Any claim for damages incurred during shipment by the carrier of the goods are insured and handled directly with the carrier. Any damages due to manufacture defects will be handled directly with Vinotemp International.

All sales are final, and unless authorized in writing by the Seller, Purchaser is not entitled to return conforming goods, under any circumstances. If Purchaser refuses to accept conforming goods, under any circumstance, the

Purchaser is liable for the return and cost of freight both ways and a restocking charge that is 35% of the purchase price of the goods. Purchaser must notify Seller of non-conforming goods within five days of delivery, after which time all goods are deemed accepted.

If Purchaser tenders payment with a check that has insufficient funds (NSF), or stops payment on a check or credit card for any reason, Purchaser agrees to pay for all costs associated with the Seller' s connection or litigation of such a claim, including without limitation extra damages, court costs and attorneys[fees. Finance charges are retroactive begin at the date of invoice. Collection fees plus NSF fee of 50$ will be added to your invoice. Title to the goods does not pass until payment is received in full by Seller and Seller retains a security interest in the goods until they are paid for in full.

LIMITED WARRANTY: Seller warrants that the goods will be free of defects in materials and workmanship as follows: Furniture style (wood) wine units: all cooling unit parts for a period of 5 (five) years; cabinetry and labor (uninstalled) for a period of 12 (twelve) months from date of sale, removal and re-installation of unit is not included in warranted labor. For the Metal cabinet wine units: parts and labor for cooling system and cabinetry for a period of 12 (twelve) months from date of sale, removal and re-installation of unit is not included in warranted labor. For a B good, scratch and dent or refurbished unit, warranty is 3 months from your dated invoice (parts for function only). Thermoelectric Wine Cellars: 90 (ninety) days from the date of sale. Cigar Humidors and Racking Systems are not warranted. Split Systems and installed products are parts only for 1 year, no labor. There is no warranty on parts purchased separately. Purchaser' s exclusive remedy is limited, at Seller' s option; to repair or replace defective part[s] with either new or factory reconditioned part[s]. Unless otherwise provided by applicable law, Purchaser is responsible for shipping the unit pre-paid to designated facility and Seller will pay return shipping charges in the continental United States for items repaired under warranty with in 12 (twelve) months from date

of sale. Since the natural variation in texture, density, grain, color, tone and shade of wood is unavoidable; Seller does not guarantee the texture, color, tone or shade of the wood: nor does seller guarantee the colorfastness of wood or against peeling, chipping, cracking or scratching. Note: Unfinished wood is subject to warping; all wood surfaces must be sealed before placing cellar into service. Improper placement of the unit will void the warranty. This limited warranty does not cover damage due to such things as accident, misuse, abuse, mishandling, neglect, acts of God, fires, earthquakes, floods, high winds, government, war, riot or labor trouble, strikes, lockouts, delay of carrier, unauthorized repair, or any other cause beyond the control of the Seller, whether similar or dissimilar to the foregoing. This limited warranty applies only inside the Continental US. (Alaska, Puerto Rico and Hawaii are not warranted under the Limited Warranty.)

Purchaser understands and acknowledges that the goods sold here are wine cellars, cigar humidors, and/or other similar units which house wine or cigars. Purchaser assumes all risk of using these units, including risk of spoilage, humidity variations, temperature variations, leaks, fire, water damage, mold, mildew, dryness and similar perils that might occur.

Unless otherwise provided by applicable law, seller is not responsible for incidental or consequential damages, and there are no warranties, expressed or implied, which extend beyond the description on the face hereof; the implied warranties of merchantability and of fitness for a particular purpose are hereby expressly disclaimed. Some states do not allow the exclusion of incidental or consequential damages, or a waiver of the implied warranties of fitness and/or merchantability, so the above limitations may not apply to you. This warranty gives you specific legal rights and you may also have other rights which vary from state to state.

In the event of any dispute between Seller and Purchaser arising out of or relating to these terms and conditions or to the goods sold generally,

Purchaser must first file a written claim with Seller within thirty days of the occurrence giving rise to the claim and wait an additional thirty days for a response before initiating any legal action. Any legal proceeding arising out of or relating to these terms and conditions or to the goods sold generally shall be brought solely in the County of Los Angeles. The prevailing party in any such proceeding is entitled to its attorneys' fees and costs. In no event may Purchaser initiate any legal proceeding more than six months after the occurrence of the event giving rise to the dispute.

The above terms and conditions are the only ones governing this transaction and Seller makes no oral representations of any kind. These Terms and Conditions can only be modified in writing, signed by both Purchaser and Seller. 11-06

For service on your unit due to malfunction please call 800 777 8466.
If the service technician makes an in home visit and finds the unit working correctly, you will be subject to a service fee for the visit.
Please Review Terms And Conditions On www.vinotemp.com
For more Information and Service please email us at info@vinotemp.com

CIRCUIT DIAGRAM

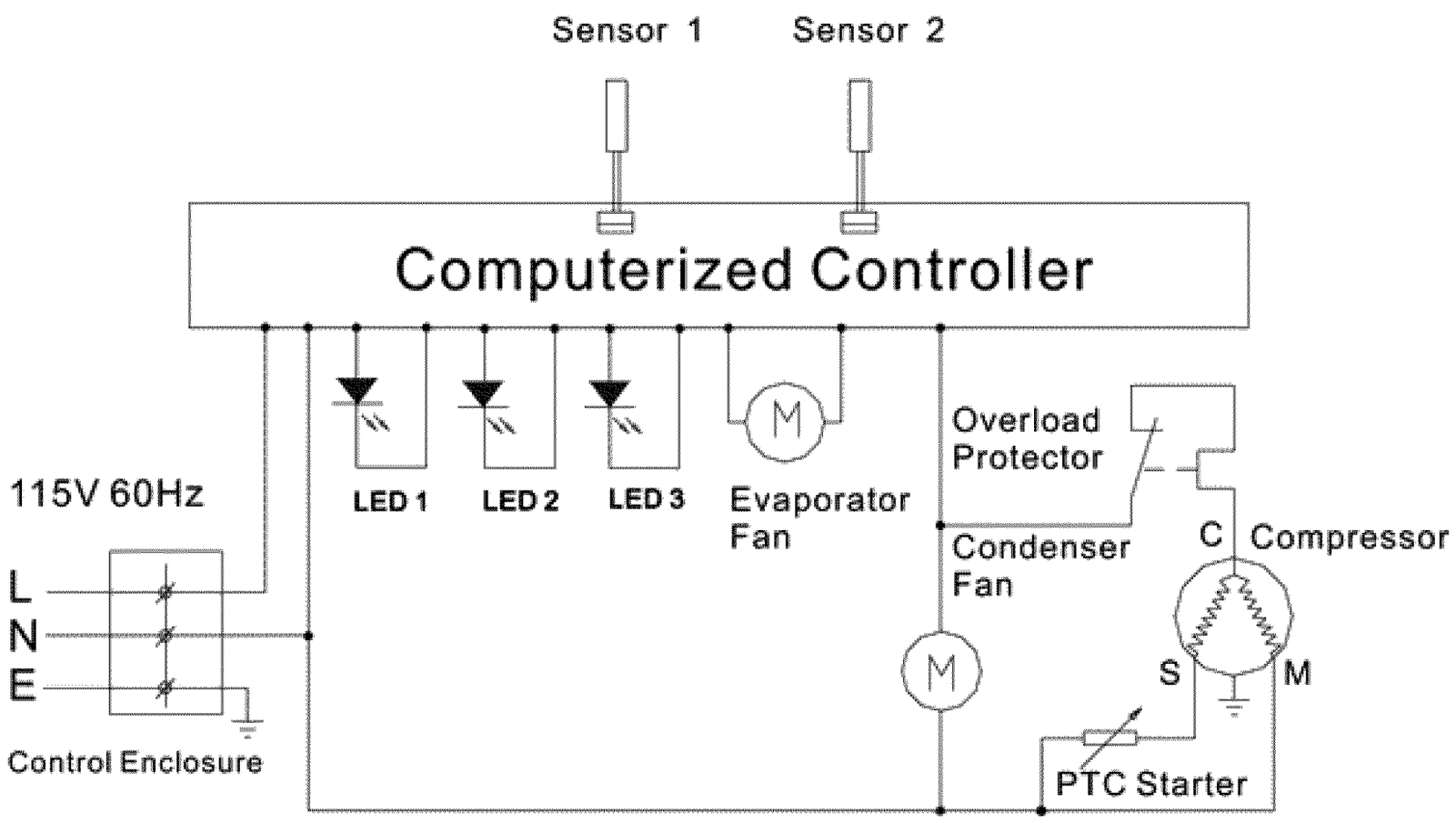

Vinotemp®

P.O.Box 6107,COMPTON,CA,90224
Tel:(310) 886 3332 Fax:(310) 886 3310
Web:www.vinotemp.com
E-mail:info@vinotemp.com

VT45FD01-S1