MODEL NO **FR-331**

REFRIGERATOR

Instruction Manual







DAEWOO

Before operating this refrigerator, please read this manual carefully.

Download from Www.Somanuals.com. All Manuals Search And Download.

FEATURE CHART

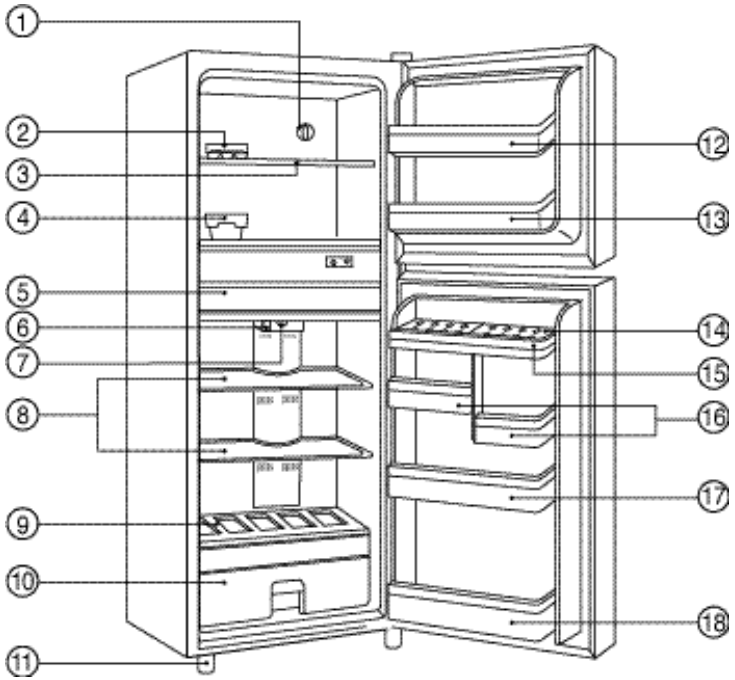

① FREEZER TEMPERATURE CONTROL KNOB
② ICE TRAY
③ F SHELF
④ ICE BOX
⑤ CHILLED CORNER
⑥ LAMP COVER
⑦ REFRIGERATOR TEMPERATURE CONTROL SWITCH
⑧ R SHELF
⑨ CRISPER COVER
⑩ CRISPER
⑪ ADJUSTABLE FOOT
⑫ F POCKET (SM)
⑬ F POCKET (SM)
⑭ EGG CASE
⑮ EGG POCKET
⑯ R POCKET (SM)
⑰ R POCKET (MEDIUM)
⑱ R POCKET (BG)

HERE ARE THE FEATURES OF YOUR NEW REFRIGERATOR

Take a moment to know all the features and convenience. Numbers match those in the illustration on page 1.

■ **Ice Tray**
Fill tray 3/4 full to allow expansion of water during freezing. Place tray in freezer chest. To release cubes, twist lid slightly.

■ **Removable Shelf**
Both shelves can be removed by pulling forward.

■ **Crisper**
Use for fruit and vegetable storage. Both the crisper and its cover shelf are removable for easy cleaning. Simply slide forward to remove.

■ **Egg Pocket**
Egg supporter in this pocket can be turned upside down.
Use for small size goods.

■ **No Frost**
No frost in freezing-room.

⚠ CAUTION

1. Be sure to check with your voltage, before inserting the power supply cord into the socket.
2. Contact the earthing conductor to this unit with an attachment earthing screws.
3. Don't spill to this unit.
4. Don't work with flammable spray, such as painting, near this unit.
5. Don't put ignitable materials, such as benzine, L .P . Gas, alcohol, etc., into this unit.
6. Be careful of the leakage of any gas equipment near this unit.
7. Be sure not to hold to the door of this unit by children.
8. Be sure not to reinsert the power supply, cord with 5 minutes after releasing it from socket. If not, a trouble may be occurred to compressor.

Download from Www.Somanuals.com. All Manuals Search And Download.

HOW TO OPERATE

1. TEMPERATURE CONTROL

Temperature is controlled by thermostat automatically.
The Temperature Control inside the refrigerator controls the degree of cooling for each compartment.

Freezer Temperature Control	Refrigerator Temperature Control
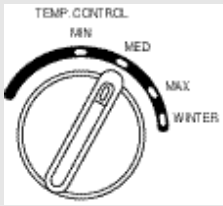	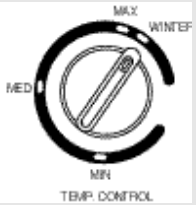
The control has four settings form MIN to WINTER. The WINTER mode is available only if atmosphere temperature is below 10°C.	The control has the four settings from MIN to WINTER. The WINTER mode is available only if atmosphere temperature is below 10°C.

Starting your new refrigerator

1. Clean the refrigerator thoroughly. Wipe the outside with a dry cloth, and the inside with a damp cloth.
2. Set the temperature control knob at normal position.
3. Connect the power supply cord.

To control temperature

Many factors may influence the internal temperature of the refrigerator and freezer compartments.

- The temperature and humidity of the surrounding environment.
- The opening frequency of the doors and the amount of warm food placed in the refrigerator.
- The combination of food and containers stored in the refrigerator.

For these reasons, you may want to adjust the control to suit the season and your needs.

METHODS OF SAFE INSTALLATION

1. SAFE INSTALLATION PLACE FOR YOUR REFRIGERATOR

- Place the refrigerator on hard and level floor.

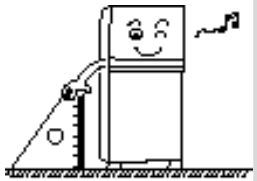

- Place your refrigerator where there is no heat source nearby.
  High surrounding temperature will lower cooling efficiency and increases your electricity bill.



- Place the refrigerator in an area with low moisture.
  Splashing water or a high moisture area may cause a short circuit and make rusting easier.

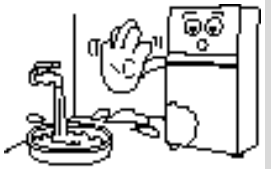

- Avoid places that are exposed to smoke.
  The discoloring can occur to the refrigerator.



- For good ventilation place refrigerator with the spaced specified on the figure.
  This helps cooling efficiency and lowers the electricity bill.

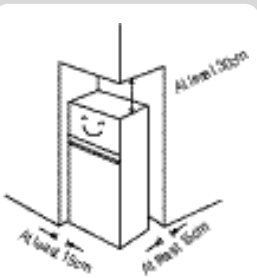

- Placing the refrigerator on the carpet may cause heat to develop and discolor the appliance. In such a case put a hard wooden board or a rubber mat between the refrigerator and the carpet.

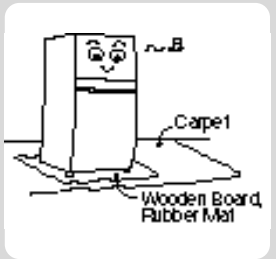

Download from Www.Somanuals.com. All Manuals Search And Download.

2. INSTALLATION STEPS

- Select a safe place to install your refrigerator.

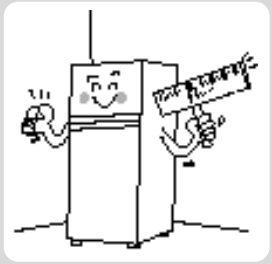

- Level the refrigerator by using the adjustable foot.



- Install the parts to their own place.



- In case the evaporation tray is sticking out, insert it in completely.



- Insert the front grill into the fastening holes and press it in until a locking sound is heard.



- Check if the doors are completely shut.



- Check the voltage and wait about an hour before plugging the power cord into an outlet.



- After running the refrigerator for 2 ~ 3 Hours put food in the refrigerator.



3. THINGS TO KNOW BEFORE MOVING OR RELOCATING THE REFRIGERATOR!

- Unplug the power cord.



- Remove water from the evaporation tray.

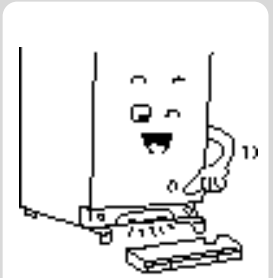

- Take food out of the refrigerator compartments.



- Fasten the interior components with tape.



- For relocating indoors use the wheels.



- When moving have two people carry the refrigerator for safety
- Fasten the doors with tape while moving to prevent them from opening.



Download from Www.Somanuals.com. All Manuals Search And Download.

4. CLEANING YOUR REFRIGERATOR

- When cleaning your refrigerator, unplug the power cord and use a soft cloth and dishwashing liquid to clean.



- The refrigerator can smell on its initial operation, but the odor will be away when the refrigerator is cooled sufficiently.



- Use a soft cloth for cleaning the interior and exterior of the refrigerator.



- Do not splash water directly on the refrigerator itself.

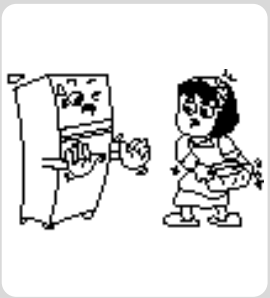

- Put the parts back to their original position.





- Turn the temperature control in the refrigerator and freezer compartment toward WINTER for colder temperature and toward MIN for warmer temperature.
- Allow approximately 12 hours or overnight for the temperature to stabilize, Then check to see if further adjustments are necessary.

To turn off the refrigerator

Disconnect the power supply cord. Remove ice tray and food. Leave doors ajar for air circulation and dehumidification of both sections.

DEFROSTING THE REFRIGERATOR

It is defrosted automatically in the refrigerator.

CAUTION

To Avoid The Risk of Electrical Shock or Death unplug the power cord before replacing a burned out light bulb or cleaning.

Cleaning

Remove all food from the freezer and refrigerator sections.

Exterior : Wash with warm, soapy water, rinse and dry.
Use appliance polish or wax periodically to keep the exterior looking like new.

Door gasket : Clean at least twice a year with mild soap and water. Rinse and dry.
Apply a light film of petroleum jelly to the gaskets to keep them soft.

Interior : Wash the liner with warm, soapy water, rinse and dry.

NOTE

Interior and Exterior

1. DO NOT USE abrasive, heavy-duty Powders, etc.
   These can scratch and dull the surface, depending on their abrasiveness and the cleaning pressure applied.
   Avoid metal pads and abrasive impregnated plastic, nylon and cloth pads, etc.
2. DO NOT USE concentrated liquid dishwashing detergent (dissiove in warm water before using.), abrasive cleaners, solvents or polishing agents on plastic parts. These cleaners may cause cracking or discoloring.

Download from Www.Somanuals.com. All Manuals Search And Download.

WHAT TO DO...

When out of operating for a long time

- Remove the power supply cord.
- Dry your refrigerator, opening the door for 2-3 days.

When you get ready to move

- Securely fasten removable interior parts (or move and package them separately).
- Do not lay your refrigerator horizontally, or compressor may be damaged.

Before you calling for service check a few things as below for yourself first.

If refrigerator is not operating:

- Is the power supply cord unplugged?
- Is home fuse blown or circuit breaker off?

If refrigerator is warmer than usual:

- Has the door been open frequently or for a long period?
- If refrigerator overcrowded preventing good air circulation?
- Is the hot thing stored without cooling?
- Is the clearance between side and rear plate of the refrigerator and the wall allowed sufficiently?

If these are unusual sounds:

- Is refrigerator placed on the level?
- Are foreign objects behind the refrigerator?
- Are dishes on refrigerator shelves vibrating?
  If so, rearrange the dishes.

HOW TO INSTALL

Location

Install refrigerator in a convenient location away from extreme heat and cold. Allow sufficient clearance about 6 cm between the refrigerator and rear wall so it is easy for refrigerator to radiate heat.

Leveling

Level refrigerator so it rests solidly on the floor without rocking.

NOTE

Make sure all packing material is removed. If the shipping tape has left a residue on the door, clean it with isopropyl alcohol (most rubbing alcohol is this type).

- The electric plug must be accessible without moving the set.
- Changing the internal light bulb.
  Disconnect the refrigerator from the main supply by removing the plug. Replace the bulb with one of the correct type and size (15Watt SES E14 Base).

If the supply cord is damaged, it must be replaced by the manufacturer or its service agent or a simmilary qualified person in order to avoid a hazard.

Download from Www.Somanuals.com. All Manuals Search And Download.

SPECIFICATION

Specification

Model	: FR-331
Voltage	: AC 127V
Frequency	: 50/60 Hz
Motor Input	: 180W
Defrosting Current	: 1.4A
Refrigerant	: R-12
Charge	: 110g
Gross Volume	: 282ℓ
Storage Volume	: 268ℓ
Shelf Area	: 1.20 m²
Electric Power Consumption	: 1.9 KWh/24 hours
Percentage Running Time	: 50%
Quantity of Ice Produced	: 4.0kg/24 hours
Tropical Design	: T

Wiring Diagram

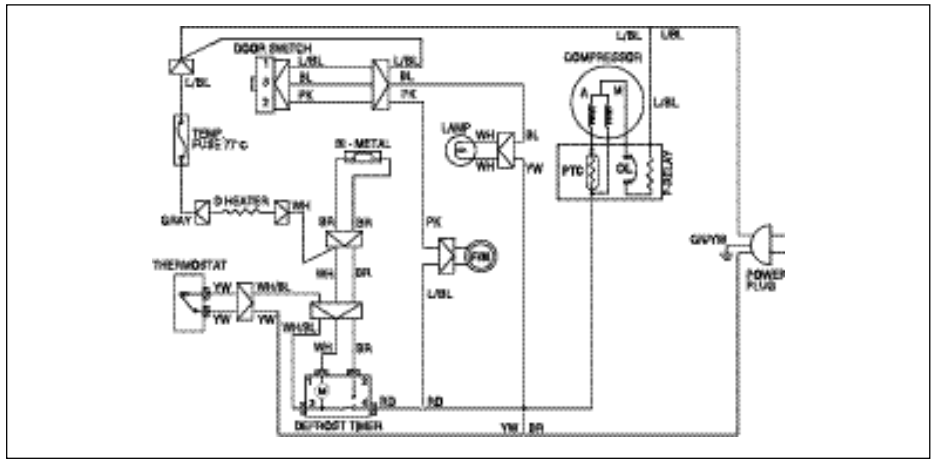

Manufacturer: **DAEWOO ELECTRONICS CO., LTD.**
Made in Korea

SPECIFICATION

Specification

Model	: FR-331
Voltage	: AC 220V
Frequency	: 50/60 Hz
Motor Input	: 160W
Defrosting Current	: 0.7A
Refrigerant	: R-12
Charge	: 110g
Gross Volume	: 282ℓ
Storage Volume	: 268ℓ
Shelf Area	: 1.20 m²
Electric Power Consumption	: 1.9 KWh/24 hours
Percentage Running Time	: 50%
Quantity of Ice Produced	: 4.0kg/24 hours
Tropical Design	: T

Wiring Diagram

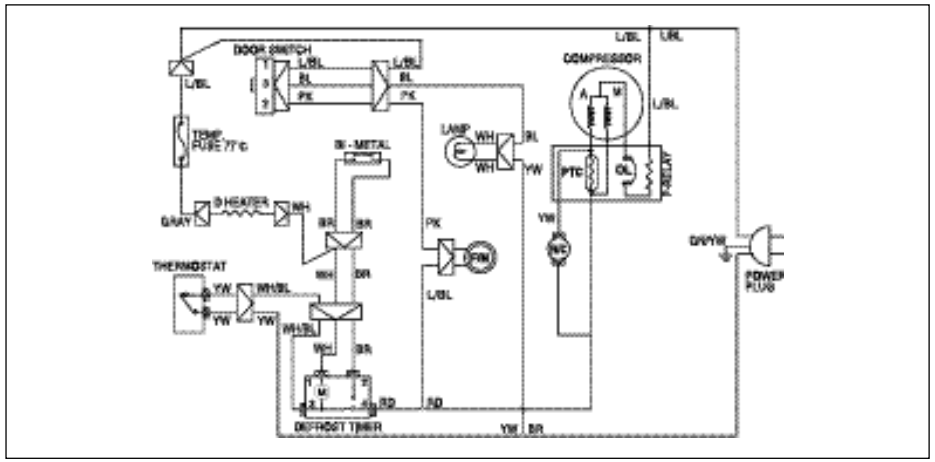

Manufacturer: **DAEWOO ELECTRONICS CO., LTD.**
Made in Korea

Download from Www.Somanuals.com. All Manuals Search And Download.

Free Manuals Download Website

http://myh66.com

http://usermanuals.us

http://www.somanuals.com

http://www.4manuals.cc

http://www.manual-lib.com

http://www.404manual.com

http://www.luxmanual.com

http://aubethermostatmanual.com

Golf course search by state

http://golfingnear.com

Email search by domain

http://emailbydomain.com

Auto manuals search

http://auto.somanuals.com

TV manuals search

http://tv.somanuals.com