MAYTAG

Maytag
Customer Service

Appliance 911



New Cabinet Design

Vertical Evaporator Coil

Foamed Divider

Refrigeration Service Manual

16008248
Issued 1996

INTRODUCTION

This refrigeration service manual provides the information necessary to service Top Mount model refrigerators.

NOTE: ALL MODELS COVERED IN THIS SERVICE MANUAL USE R134A REFRIGERANT

The manual is printed in loose leaf format. Each part of this manual is divided into sections relating to a general group of components and each section is subdivided into various parts describing a particular component or service procedure.

The subdividing of the subject matter plus the loose leaf form will facilitate the updating of the manual as new models and new or revised components of service procedures are introduced.

Each page of this manual will be identified in the ***lower right*** hand corner. As new or revised pages are published, it will be easy to keep the manual up to date.

This service manual is a valuable service tool and care should be taken to keep it up to date by prompt and proper filing of subsequent pages as they are issued.

The following models are covered in this service manual:

ALL "E" MODELS ARE ENERGY MODELS, ALL "E" MODLES EXCEPT CTN OR CTL 11511AEW HAVE A PREMIUM SOUND PACKAGE.

NOTE: WHEN SERVICING "E" MODELS ONLY USE PARTS SHOWN FOR THAT MODEL IN THE PARTS LIST.

APD MODEL NUMBERS				
MAYTAG	JENN-AIR	MAGIC CHEF		ADMIRAL
			(Left Hand)	
MTB1542ARW **	JTB1986ARW@/A	CTN1511AEW	CTL1511AEW	
MTB1553ARW@/A	JTB1987ARW /A	CTB1521ARW@	CTM1521ARW /A	
MTB1742ARW **	JTB1988AEW@/A/B	CTF1521ARW /A	CTK1521ARW /A	
MTB1753ARW@/A	JTB2186ARW /A	CTB1522ARW	CTM1522ARW /A	
MTB1943ARW /A **	JTB2187ARW /A	CTB1720ARW /A		
MTB1953ARW /A	JTB2188AEW /A/B	CTB1722ARW@/A	CTM1722ARW /A	
MTB1954ARW@/A	JTB2488AEW /A/B	CTB1723ARW /A		
MTB1955ARW@/A	JTB2688AEW /A/B	CTB1724ARW /A		
MTB1956AEW@/A/B		CTB1920ARW /A		
MTB2153ARW /A		CTF1920ARW /A		
MTB2154ARW /A		CTB1921ARW@/A	CTM1921ARW /A	
MTB2155ARW /A		CTF1921ARW /A	CTK1921ARW /A	
MTB2156AEW /A/B		CTB1922ARW /A		

Continued...

© 1997 Maytag Corporation

APD MODEL NUMBERS				
MAYTAG	JENN-AIR	MAGIC CHEF		ADMIRAL
MTB2454ARW /A		CTB1923ARW /A		
MTB2456AEW /A/B		CTF1923ARW /A		
MTB2656AEW /A		CTB1924ARW /A/B		
		CTF1924ARW /A		ATB1511ARW /A
		CTF2120ARW /A		ATB1712ARW /A
		CTB2122ARW /A		ATB1713ARW /A
		CTB2123ARW /A		ATB1912ARW /A
		CTF2123ARW /A		ATB1913ARW /A
		CTB2124ARW /A/B		ATF1912ARW /A
		CTF2124ARW /A		ATB1914ARW /A
		CTB2424ARW /A		ATB2112ARW /A
				ATB2113ARW /A

** Brand Warranty

© 1997 Maytag Corporation

CONTENTS

SECTION 1. GENERAL INFORMATION 1-1
Electrical Requirements 1-1
Forced Air 1-2
Checking Operation 1-3
Tools Needed For Sealed System Repair 1-5
Refrigeration System 1-8
Diagnosis 1-10
Components 1-15
System Flush Procedure 1-16
Sweep And Final Charge 1-19

SECTION 2. COMPONENTS 2-1
Compressor 2-1
Condenser 2-2
ELECTRICAL SYSTEM 2-4
Testing The Compressor Direct 2-4
Overload Protector 2-5
PTC Starting Device & Run Capacitor 2-6
Run Capacitor 2-7
Temperature Control 2-8
Auto Damper Control (MAYTAG JENN-AIR (ONLY) 2-10
Defrost Timer 2-13
Defrost Heater And Thermostat 2-16
Condenser Fan Motor 2-17
Freezer Fan Motor 2-18

SECTION 3. CABINET AND RELATED COMPONENTS 3-1
FOOD LINER 3-1
COMPARTMENT ACCESSORIES/MOUNTING HARDWARE 3-1
Shelves 3-1
Freezer Shelves 3-1
Cantilever (Fresh Food) Shelves 3-1
Cantilever Shelf Trim 3-2
Crisper Shelves 3-2
Refrigerator Meat Keeper 3-2
Freezer Cold Controls 3-3
REPLACING THE FREEZER CONTROL ACTUATOR ARM AND TAPE 3-5
MOUNTING HARDWARE 3-5
Nylon Snap Nuts 3-5
Water Drain Systems 3-6
CABINET DOORS AND ASSOCIATED PARTS 3-6
Paint Touch-Up 3-6

© 1997 Maytag Corporation

Inner Door Liner (Metal Strips **ONLY** on Maytag And Jenn-Air "E" Models) 3-6
Outer Door Panel 3-7
Cabinet Wheels 3-8
Cabinet Leveling 3-8
Door Seal 3-9
Door Alignment 3-10
Door Switch 3-10

SECTION 4. ICE MAKER 4-1
Servicing 4-1
Accessing The Control Box 4-2
Service Procedures 4-2
Water Fill Adjustments 4-4
Water Problems 4-5
Thermostat 4-5
Shut-Off Arm 4-6
Harness 4-6
Leveling Of Ice Maker 4-7
Removing Fill Cup 4-7
Other Information 4-8

SECTION 5. TROUBLESHOOTING 5-1

SECTION 6. SPECIFICATIONS 6-1
TOP MOUNT
15 CUBIC FT 6-2
17 CUBIC FT 6-3
19 CUBIC FT 6-4
21 CUBIC FT 6-5
24 CUBIC FT 6-6
26 CUBIC FT 6-7
19 CUBIC FT (AUTO DAMPER) (MAYTAG - JENN-AIR ONLY) 6-8
21 CUBIC FT (AUTO DAMPER) (MAYTAG - JENN-AIR ONLY) 6-9
24 CUBIC FT (AUTO DAMPER) (MAYTAG - JENN-AIR ONLY) 6-10
26 CUBIC FT (AUTO DAMPER) (MAYTAG - JENN-AIR ONLY) 6-11

SECTION 7. SCHEMATICS 7-1
Non Provisional Ice Maker Models ..... 7-2 - 7-4
Provisional Ice Maker Models ..... 7-2 - 7-4
Dual Slide Control Models ..... 7-5 - 7-6

© 1997 Maytag Corporation

SECTION 1. GENERAL INFORMATION

INSTRUCTIONS -

ELECTRICAL REQUIREMENTS

Observe all electrical codes and local codes and ordinances.

A 120 volt 60 Hz, 15 ampere fused electrical supply is required. An individual branch (or separate circuit serving only this appliance is recommended.)

Do not use extension cord .

Before plugging in power cord, operating or testing, follow grounding instructions in Grounding Section.

Electrical Service
Grounding: 120 VOLTS, 60Hz Only

IMPORTANT SAFETY PRECAUTIONS:

⚠ WARNING

Personal Injury Hazard

To prevent unnecessary risk of fire, electrical shock or personal injury, all wiring and grounding must be done in accordance with National Electrical Code and local codes and ordinances. It is the personal responsibility and obligation of the appliance owner to provide adequate electrical service for this appliance.

⚠ WARNING

Personal Injury Hazard

Electrical ground is required on this appliance.

GROUNDING INSTRUCTIONS:

This appliance is equipped with a power supply cord having a 3-prong grounding plug. For your safety, this cord must be plugged into a mating 3 prong type wall receptacle which is ***properly wired, grounded and polarized.***

If a mating wall receptacle is not available. Contact a qualified electrician to have the wall receptacle replaced. Do not use an AC adapter plug. If there is any question, local building officials or electrical utility should be consulted.

⚠ WARNING

Personal Injury Hazard

Do not under any circumstances remove the grounding prong from the power supply cord.

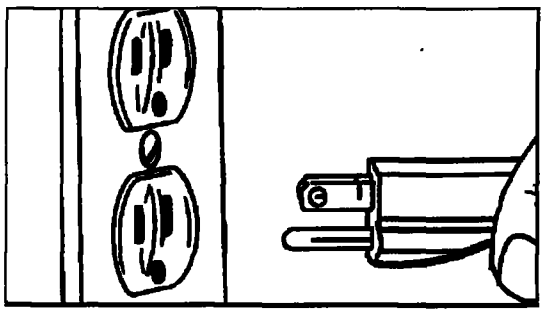

© 1997 Maytag Corporation

FORCED AIR SYSTEMS

On all forced air models, an air circulating fan draws air from around the evaporator and directs it to the fresh food and freezer compartments. A carefully measured amount of chilled air is directed into the fresh food compartment through a baffle to maintain the desired fresh food compartment temperature. The greater part of chilled air is directed into the freezer compartment to maintain freezer temperature. Forced air models use a fan cooled condenser. The evaporator is automatically defrosted every eight or ten hours of compressor run time depending on the model. Defrosting is accomplished by a defrost heater activated by a timer. The accumulated moisture is drained into a defrost pan located in the compressor area of the cabinet.

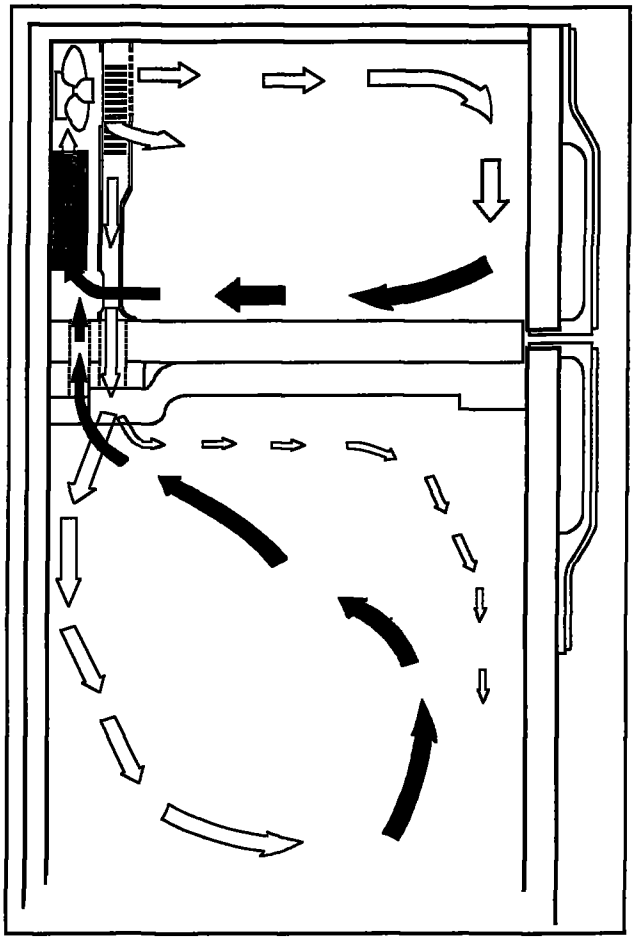

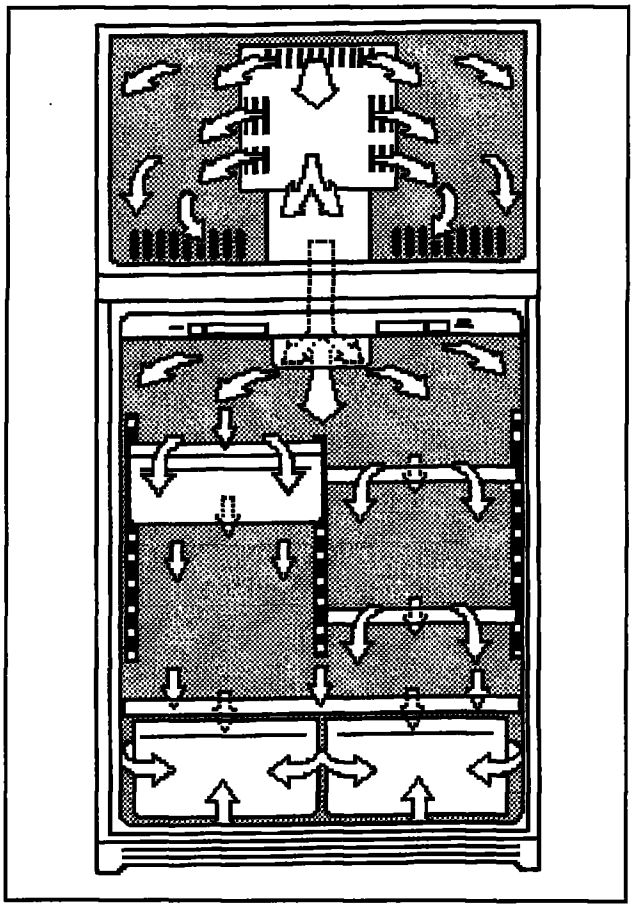

AIR FLOW - FORCED AIR SYSTEMS

The balance between air flow into the fresh food and freezer compartments is an important factor in maintaining proper compartment temperatures in a forced air refrigeration system. A baffle is used to regulate the amount of chilled air directed into the fresh food compartment. If a colder freezer compartment temperature is desired, the baffle is adjusted so that less air is directed into the fresh food compartment. This causes the compressor to run longer since the thermostat sensing element is located in the fresh food compartment. Cold air is drawn through the fin and tube evaporator and into the fan. A portion of the air is deflected into the fresh food compartment where it absorbs heat and returns to the fin and tube evaporator through the

© 1997 Maytag Corporation

return opening in the back center of the fresh food, freezer divider. Most of the air moving through the fin and tube evaporator, however, is blown through the freezer air tunnel and circulated throughout the freezer compartment and back across the fin and tube evaporator where it starts another cycle.

CHECKING OPERATION

The following general information explains several methods for checking operation of the refrigeration system. This information applies to all systems covered in this manual. The correct operation of a refrigeration system is dependent upon the proper functioning of each of the parts comprising the system.

If the system does not operate properly (long run periods, warmer than normal temperatures), the trouble may be caused by one of the following conditions:

(1) - Restricted Capillary Tube

The opening of a capillary tube is about the same diameter as the period at the end of this sentence. This should indicate that it doesn't take much to restrict this tube. It should also tell you to use care when any service procedures involve moving or touching the capillary tube. A very slight kink can cause a complete restriction of the tube.

Restrictions of the capillary tube may be caused by: (1) moisture freeze-up, (2) foreign particles lodged in the tube, or (3) a bend or kink.

If the capillary tube is restricted, there will be a noticeable lack of frost on all of the cooling surface; the compressor may operate for a short period of time and cycle on the overload. Because some models can hold the entire charge in the condenser, the compressor may run continuously and definite vacuum will be noticed in the low side. When moisture freeze-up causes a restriction, it usually occurs at the outlet end of the capillary tube. Normally, frost buildup can be detected in this area.

At the discharge end of the capillary apply heat. **(NOTE: *When using a heat gun or hair dryer, use low heat.)*** If there is enough head pressure, and if the restriction is caused by moisture freeze-up, you will be able to hear a gurgling noise as the heat releases the refrigerant through the tubing.

It is possible that this moisture will be absorbed by the drier and remedy the trouble. However, if the freeze-up reoccurs, you must replace the drier.

A kink in the capillary tube will reveal about the same symptom as a moisture freeze-up except for the accumulation of frost. Check the capillary tube in areas that are possible, and straighten the kink to relieve the restrictions. Check the unit operation to see if you have helped the situation. If the trouble persists, replace the defective part. If the freeze-up condition does not exit and there is not a kink, you can assume that a foreign particle is causing the restrictions. The only remedy in this case is to replace the restricted part.

© 1997 Maytag Corporation

(2) - Partial Restriction In Low Side Tubing

Bent tubing, foreign matter, or moisture in the system may cause a partial restriction in the low side tubing. This is usually indicated by frost-free tubing between the restriction and the capillary tube and by frost-covered tubing between the restriction and the suction line. The restriction acts like a second capillary tube, increasing the pressure ahead of it (warming) and decreasing the pressure beyond it (cooling). To confirm the existence of a restriction in the low side tubing, perform operational pressure checks.

(3) - Slow Leak In System

On forced air models, long run time will be noticed during the early stages of a leak. As the refrigerant continues to escape, both compartments will gradually warm up and the compressor will run continuously. The freezer will probably warm up first.

(4) - Incorrect Refrigerant Charge

The sealed unit may have too much refrigerant (overcharged system) or too little refrigerant (undercharged system). The paragraphs below will inform you on how to recognize a system with these defects.

An overcharged system may have a frost back condition appearing outside the insulation sleeve on the suction line at the cabinet rear. When the compressor stops, the frost melts and drips on the floor. A heat exchanger separation will also cause this symptom.

An undercharged system depending on the degree of undercharge, will operate with temperatures above normal and the compressor run time will be increased. The greater the undercharge, the higher the temperature will be and the longer the run time.

An undercharged system must be purged, evacuated, and recharged with the proper amount of refrigerant. Before recharging, however, test for refrigerant leaks.

© 1997 Maytag Corporation

TOOLS NEEDED FOR R134A SEALED SYSTEM REPAIR

The following list may help identify basic refrigeration tools needed:

- ALL HOSES AND EQUIPMENT MUST MEET STANDARDS FOR HANDLING R134a REFRIGERANTS
- APPROVED AND CERTIFIED RECOVERY EQUIPMENT AND RECOVERY CYLINDER (see local supplier for variety of equipment)
- MANIFOLD GAUGE SET / HOSES MUST HAVE LOW LOSS FITTINGS (Robinair 41365)
- HEATED CHARGING CYLINDER WITH R134A SCALE (Robinair 43134B)
- TEMPORARY ACCESS VALVES (2) (Robinair 40288)
- 1/4" FLARE TEE - MFL X MFL X FFL (Robinair 40399)
- 1/4" QUICK COUPLER VALVE (Robinair 40380)
- PROCESS TUBE ADAPTER SET (Robinair 12458)

OTHER TOOLS REQUIRED BUT NOT NECESSARILY DEDICATED TO R134A SERVICE:

- TUBING CUTTER (Robinair 14987A)
- BRAZING TORCH (Robinair 12587)
- SWAGGING TOOLS (Robinair 14313)
- VOLT-WATT METER (MAYTAG CUSTOMER SERVICE 20000019)
- LEAK DETECTION EQUIPMENT FOR CFC/HCFC AND HFC OR EQUIVALENT
- PINCH-OFF TOOLS (Robinair 12294 or 12396)

NOTE: ***Robinair equipment is listed as a reference only, equivalent substitutes may be used. Additional tools may be required for special situations.***

LEAK DETECTOR - Leak detectors compatible with R134a should be used. Due to the possibility of contaminating the sealed system with moisture, using soap bubbles can cause problems, especially if drawn into a low side leak. To minimize the possibility of moisture entering the system, the use of wet rags or towels to cool a brazed joint should be avoided.

DRIERS/FILTERS - Any time a sealed system repair is made, the drier must be replaced. The drier on R134a systems is different, using a new desiccant which provides system compatibility and proper moisture absorption. Use of the old type drier on new R134a systems would result in a repeat sealed system failure. Part number **13900-1** is the drier which must be used on R134a systems. This drier may be used on R12 systems also and will supersede the 13900 drier, but be sure that the older 13900 is ***NOT*** used on the R134a system. Additionally, "unsoldering" a joint rather than the score and break method is not acceptable due to the possibility of chemical and moisture contamination. Always cut the drier out of the system-never apply heat.

© 1997 Maytag Corporation

OTHER IMPORTANT INFORMATION

LIMIT TIME OF EXPOSURE TO THE ATMOSPHERE - Whenever a sealed system is repaired, do not expose an open line to the atmosphere for more than 15 minutes. Replacement components will come sealed by either brazing (drier) or plugs (compressor). Do not open the new drier to the atmosphere until you are ready to braze it into place. Before installing a new compressor, pull a plug to be sure the unit is still pressurized. If no pressure, do not use the compressor. If pressure exists, reinstall the plug to ensure non-contamination during the service procedure.

LOW SIDE LEAKS - In the event of a low side leak, moisture has probably been drawn into the system. The **compressor must be replaced** in addition to the normal repair. Also, a system flush must be made before proceeding with the sweep charge and final charge.

PLUGGED CAPILLARY TUBE - Moisture or other contaminants in the R134a system can cause the formation of gel-like or salt-type deposits within the system. This causes capillary tube restrictions which may not be removed by the flush procedure detailed later. If the restriction cannot be removed from the capillary tube, the heat exchanger, evaporator and compressor must be replaced.

SYSTEM FLUSH - Flushing of the system is required whenever there has been a low side leak, plugged capillary tube or compressor replacement. This is a procedure in which R134a refrigerant is flushed through the system and into the recovery system to remove moisture and non-condensables which may have entered the open system. The compressor must be isolated during the flush procedure, in order to prevent contaminants from being absorbed into the ester oil, resulting in a contaminated system.

The system flush procedure will be done in two parts. First, the condenser, including the yoder loop, will be isolated by means of process tube adapters and flushed with 4 ounces of R134a. After the drier has been replaced, the entire sealed system minus the compressor will be flushed, also with 4 ounces of the refrigerant. This second step can take about 15 minutes in order to circulate the refrigerant through the condenser, the drier, the capillary tube, the evaporator and out the suction line into the recovery equipment. During this 15 minutes, the old compressor can be removed and the replacement set into place, mounted and prepared electrically. The compressor is totally installed except for the final brazing of the suction and discharge lines.

© 1997 Maytag Corporation

R134a SEALED SYSTEM SERVICE PROCEDURE

Any sealed system failure in upper area indicated requires the replacement of the ***evaporator, heat exchanger, drier and compressor***. Perform system flush, sweep and add final charge according to procedure shown.

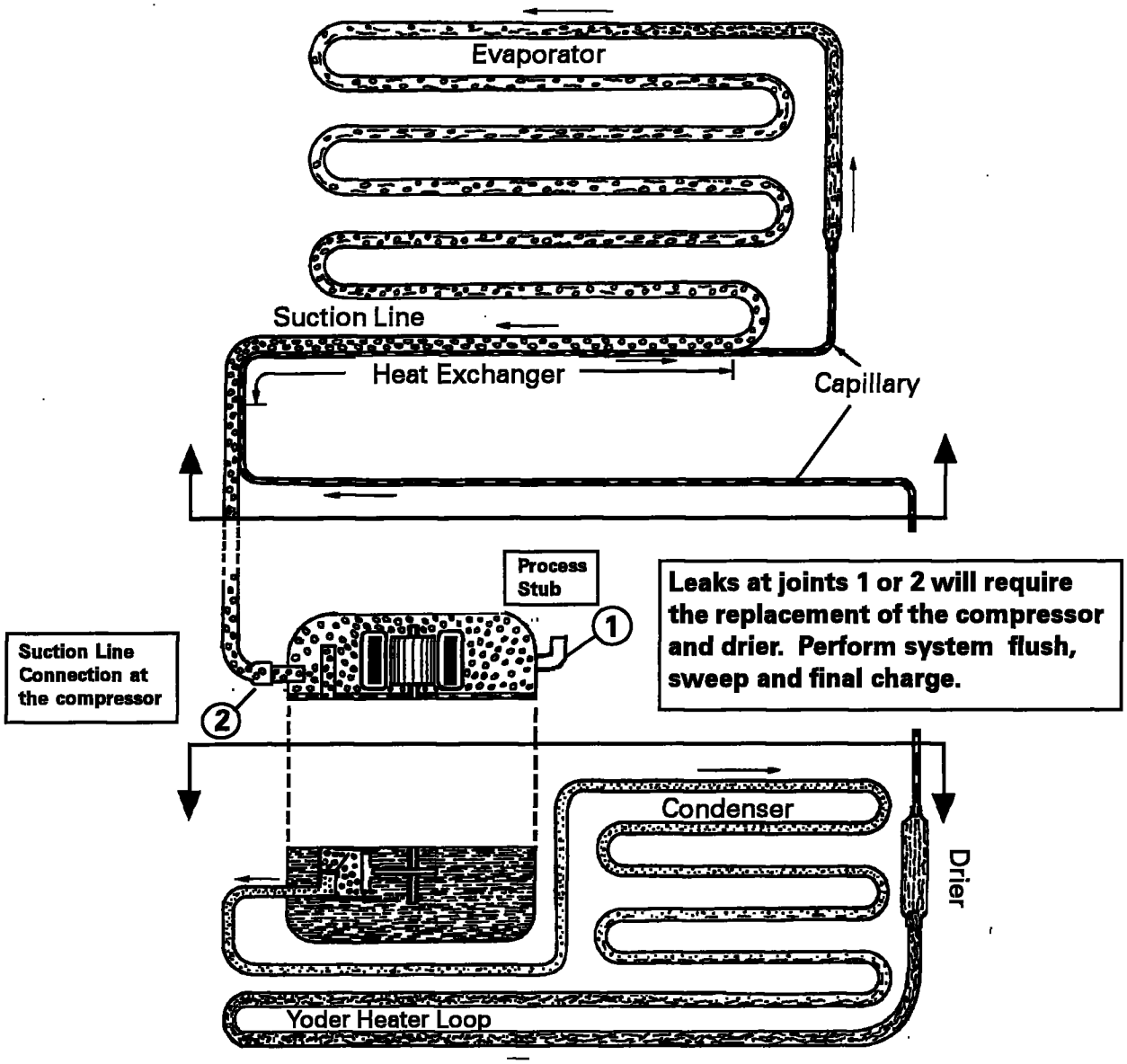

Leaks or repairs to joints or components in the ***lower*** area require repair or replacement of the component and drier. Perform system sweep and add final charge according to normal procedure.

© 1997 Maytag Corporation

REFRIGERATION SYSTEM

All refrigerators cool by removing heat from the cabinet rather than pumping in cool air. In a conventional refrigerator, liquid refrigerant enters the evaporator and vaporizes (boils) due to the low pressure, creating a very cold surface which removes heat from inside the cabinet. This causes the refrigerant to boil (evaporate) into a vapor state and be drawn into the compressor. The compressor pressurizes the vapor and pumps it into the condenser. The hot vapor in the condenser gives off the heat into the room. As the vapor cools, it condenses back into a liquid and returns to the evaporator to start the process over again. The system continually soaks up the heat inside the refrigerator and deposits the heat back into the room.

- The **compressor** of the refrigeration system serves two purposes: it ensures movement of the refrigerant throughout the system and it increases the pressure and temperature of the vapor received from the suction line and pumps the refrigerant into the discharge line. The condenser receives this high temperature, high pressure refrigerant and allows the heat to be released into the cooler surroundings. This heat removal "condenses" the refrigerant vapor into a liquid.

- The **yoder loop** is the last pass of the condenser routed around the cabinet of the freezer to help prevent moisture formation.

- The **drier** is installed at the end of the condenser or yoder loop to capture moisture which may be present in the system.

- The **capillary tube** meters the flow of refrigerant and creates a pressure drop. Size and length of the capillary is critical to the efficiency of the system.

- As the refrigerant leaves the capillary tube and enters the larger tubing of the **evaporator**, the sudden increase in tubing diameter and the pumping action of the compressor form a low pressure area and the temperature of the refrigerant drops rapidly as it changes to a mixture of liquid and vapor. In the process of passing through the evaporator, the refrigerant absorbs heat from the storage area and is gradually changed from a liquid and vapor mixture (saturated refrigerant) into a vapor.

- The **suction line** returns this low pressure vapor from the evaporator back to the compressor, and the cycle starts again.

- Part of the capillary tube is soldered to the suction line which forms a **heat exchanger**. Heat from the capillary tube is thus transferred to the suction line to superheat the refrigerant there and at the same time this further cools the liquid in the capillary tube. This cools the refrigerant before it enters the evaporator and also heats the refrigerant before it enters the compressor to ensure a vapor state.

© 1997 Maytag Corporation

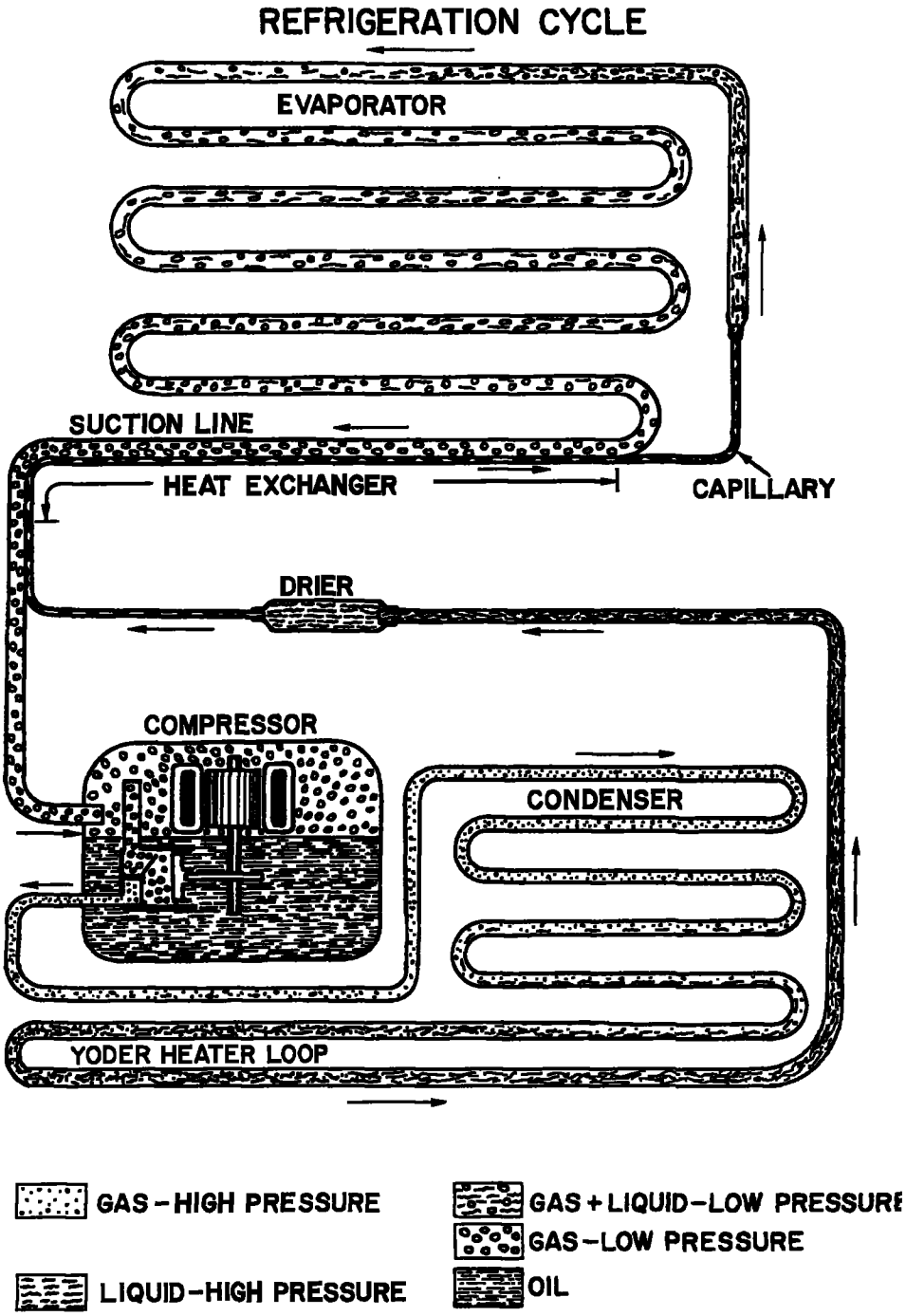

© 1997 Maytag Corporation

DIAGNOSIS

Sealed system diagnosis of R134a refrigerant systems is to be performed identically to that of R12 systems. In fact, as shown in the following flow chart, the service procedures are virtually the same, except for low side leaks, plugged capillary tube or compressor failure which results in a system flush.

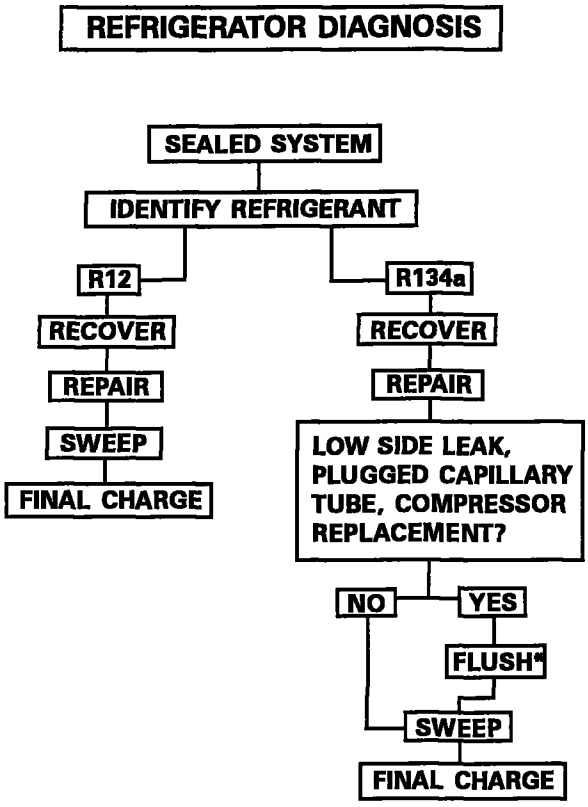

* FLUSH INCLUDES COMPRESSOR REPLACEMENT

Remember, before entering the sealed system, all other systems must be tested and properly repaired. These include the electrical system, defrost system, control operation, and air flow systems: evaporator and condenser motors. ***Before "turning a screwdriver", many checks can be made simply by using your senses:***

LISTEN:
- What is the customer complaint?
- Are the fans operating?
- Is the compressor operating?

LOOK:
- Are ice cubes present?
- Is the light on/off when the switch is operated?
- Are the controls set properly?
- Do door gaskets seal properly?
- Is there an ice buildup on the evaporator cover?
- Are the return air ducts free of ice?

TOUCH:
- Is the evaporator cover warm?
- Is air felt exhausting from the kick plate?
- Is air circulating in the freezer and fresh food compartments?
- Is the quarter inch discharge line from the compressor hot?
- Is the condenser warm?

SEALED SYSTEM DIAGNOSIS

Once it has been determined that the other refrigerator systems are working properly, a probable sealed system problem can be confirmed through the use of a wattmeter and checks of low and high side pressures.

Access valves are not to be left on a sealed system after service. To measure low side pressure, a temporary access valve can be installed on the compressor process tube. To remove the valve after repair, a pinch off tool may be used to

© 1997 Maytag Corporation

seal the tube while the valve is removed and the hole brazed shut. To check high side pressure, a temporary access valve should be installed on the discharge line. When the high side valve is installed, the technician is committed to replacement of the drier and a sealed system repair. Once again, this valve must be removed upon completion of repair. Make sure that the gauges which are used to check the operating pressures are accurately calibrated. When not connected to a system, the gauge pointer should indicate zero pressure. If necessary, turn the calibrating screw until the pointer is at "0".

NOTE: ***The following situations are typical, however other factors such as gauge placement, line voltage and ambient temperature must also be considered.***

The following symptoms use high and low side pressures plus wattage measurements to diagnose sealed system problems. Normal low side pressure will range from below zero to about six pounds of pressure, depending on several factors such as refrigerator model, ambient temperature, load and customer usage. Normal high side pressure is also dependent on external factors but will range in the 100 to 125 p.s.i.g. range. Wattage and pressure figures will vary based on the model and age of the refrigerator. Refer to the performance data table(s) at the end of the manual.

Symptoms:

High Side - Near normal pressure
Low Side - Slightly lower pressure
Wattage - Lower than normal

Diagnosis - Low side restriction. The evaporator, suction line or other low side tubing is probably restricted (kinked or blocked with a foreign article such as moisture or contaminant). This condition is usually accompanied with a frost build up on the low side of the restriction. High side pressure will take longer to balance with the low side pressure when the compressor is stopped.

Symptoms:

High Side - Lower than normal
Low Side - Slightly lower than normal
Wattage - Lower than normal

Diagnosis - High side leak. Both high and low side pressures will drop as more refrigerant escapes.

Symptoms:

High Side - Higher than normal
Low Side - Slightly lower than normal
Wattage - Higher than normal

Diagnosis - Low side leak. High side pressure will continually increase since air is being drawn into the system through the leak and becomes trapped in the high side tubing. The low side may show a slight increase in pressure because of the air being drawn in through the leak.

Symptoms:

High Side - Lower than normal
Low Side - In a vacuum
Wattage - Lower than normal

Diagnosis - Capillary tube restriction. High side pressure will take much longer (or not at all) to equalize with the low side pressure when the compressor is stopped.

Symptoms:

High Side - Higher than normal
Low Side - Higher than normal
Wattage - Higher than normal

Diagnosis - Overcharged system. The extent of the pressure increase depends

© 1997 Maytag Corporation

on the amount of overcharge and ambient temperature. An overcharge may also cause the suction line to be frosted during the run cycle, resulting in water on the floor after cycling off.

Symptoms:

High Side - Lower than normal
Low Side - Higher than normal
Wattage - Lower than normal

Diagnosis - Inefficient compressor. Cooling surfaces may be covered with a thin film of frost, but the temperature will not descend to cut off temperature of the control, even with continuous running. Also, the condenser will be noticeably cooler to the touch than normal. Once the confirmation that an inefficient compressor is made, the compressor should be replaced.

Symptoms:

High Side - Normal
Low Side - Normal to slightly higher than normal - suction line possibly sweats
Wattage - Normal

Diagnosis - Separated capillary tube. The capillary tube must be connected to the suction line to provide proper heat transfer. Without this transfer, liquid refrigerant in the capillary tube enters the evaporator at a slightly higher temperature thereby lessening the ability to remove heat from inside the refrigerator. The customer complaint would be long run time, slow ice production, warmer fresh food temperature, in general, poor overall performance. Another symptom of a separated capillary tube could be moisture on the floor behind the refrigerator. The heat from the capillary tube is utilized by the suction line to ensure that vapor rather than liquid refrigerant is returned to the compressor. If liquid is present in the suction line, frost or moisture forms on the outside of the line and eventually drips to the floor.

LEAK TESTING

Once it has been determined through proper diagnosis that a leak is present in the sealed system, attempt to find the leak before opening the system if possible. To check the high side for leaks, be sure that the compressor is running. During run time the high side pressure is greater. To increase the pressure slightly, stop the condenser fan blade or block the air flow through the condenser. To check the low side for leaks, stop the compressor. During off times, the low side pressure will increase to equalize with the high side. By warming the evaporator, this pressure will increase. If too much refrigerant has leaked out to create enough pressure to locate the leak, add 4 ounces of the proper refrigerant to the system and proceed with the test procedure.

The presence of oil around a tubing joint usually indicates a leak. Care must still be taken to pinpoint the exact location. Remember that a leak detector compatible with R134a refrigerant must be used. A sealed system component, such as the evaporator or yoder loop, should not be condemned unless a non-repairable leak is confirmed. This should be determined by either locating the actual leak or by isolating the component from the rest of the system and determining if it holds pressurization or a vacuum - whichever method is chosen.

© 1997 Maytag Corporation

DRIER

Whenever the sealed system is entered, the drier must be replaced. For R134a refrigerant systems, use a **13900-1** drier. This drier has the proper desiccant suitable for the refrigerant. The drier is stamped with an arrow which indicates the direction of refrigerant flow. The drier inlet has two lines - one connects to the yoder loop and the other will be used as a process tube through which the system sweep and final charge will be made. The drier outlet will be connected to the capillary tube. Care should be taken to ensure that the capillary is not inserted too far into the drier to make contact with its internal screen, yet in far enough to prevent restricting the small diameter capillary tube opening with the solder alloy.

CONDENSER

The condenser is a long folded tube which receives the hot, high pressure vapor from the compressor. While the most common problem is keeping the condenser clean from lint and dirt buildup which prevents proper airflow and the required transfer of the heat to the surroundings, it is possible that due to an unrepairable leak or a non-removable restriction, the condenser could require replacement. As with any R134a sealed system repair, the key to success is the limiting of the time of atmospheric exposure. Do not remove the plugs on the condenser inlet and outlet tubes until the new condenser is mounted in place and made ready for brazing. The inlet side will connect to the compressor discharge line and the outlet to the yoder loop.

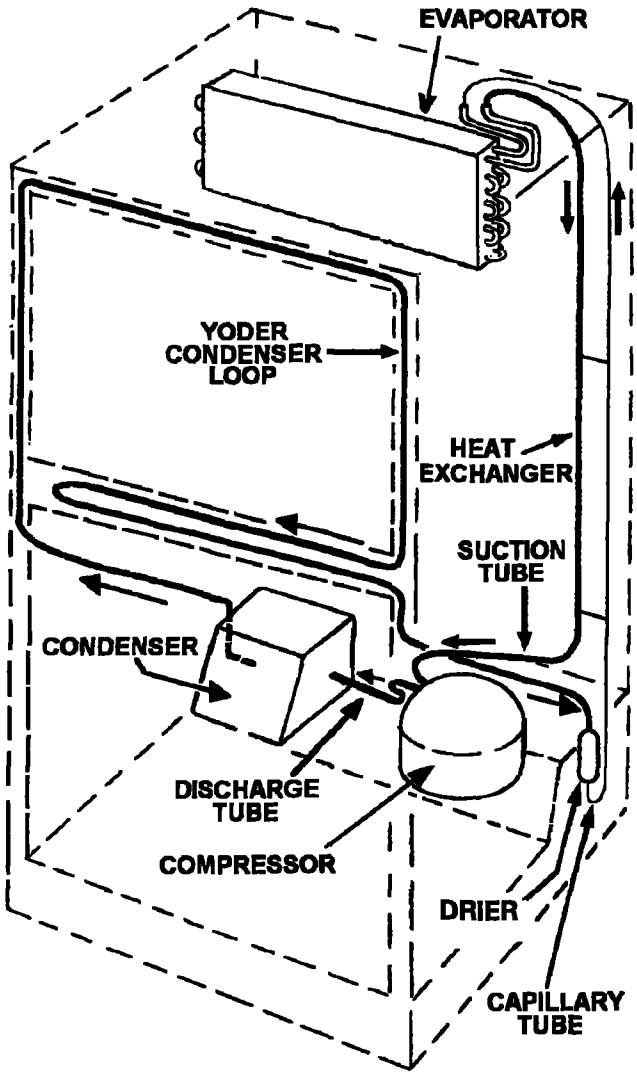

© 1997 Maytag Corporation

YODER LOOP

The yoder loop is a non-replaceable component of the sealed system routed within the walls of the cabinet. To diagnose the yoder loop, the tubing must be isolated from the sealed system. This procedure is shown below. If the loop fails to hold the vacuum, a heater repair assembly is to be installed and the loop bypassed by connecting the condenser outlet tube directly to the inlet of the drier.

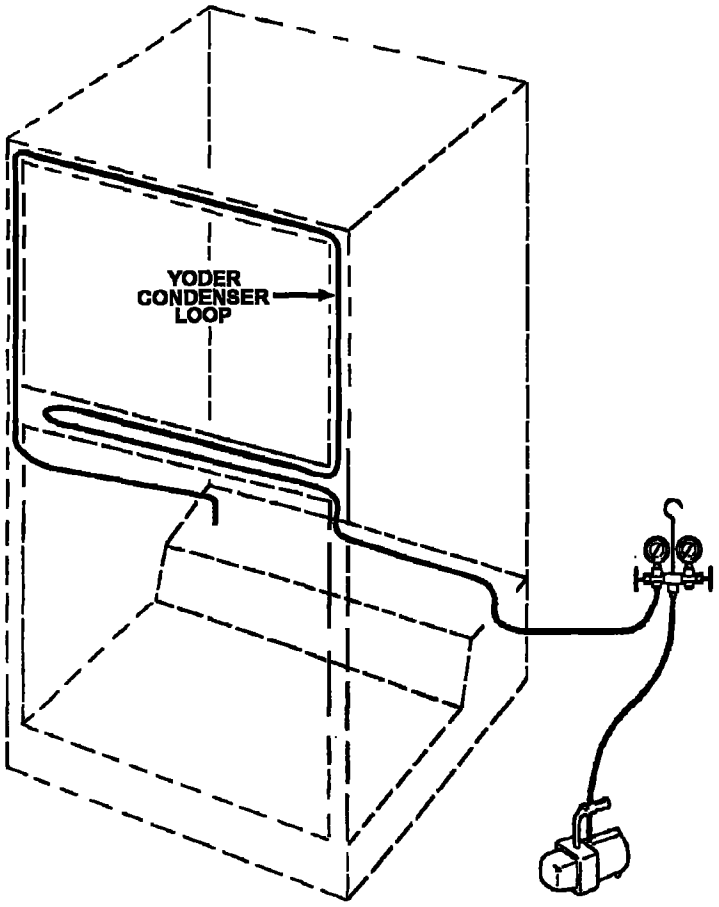

YODER LOOP DIAGNOSTIC TEST

1. Isolate yoder loop from remainder of sealed system
2. Cap or seal one end of the loop (braze or use process adaptor and cap)
3. Attach process adaptor to open end of loop
4. Attach compound gauge and vacuum pump to the loop
5. Pull a vacuum and close valve to test for leak in the loop
6. If unit holds a vacuum, no leak is indicated. Reconnect the yoder loop to the system, replace the drier and recharge the system to specifications

A VACUUM WILL BE MAINTAINED IF THE SYSTEM IS GOOD.

© 1997 Maytag Corporation

EVAPORATOR

The evaporator is a long aluminum tube folded or coiled within the freezer compartment. If a leak is present in the evaporator it is not repairable and must be replaced. On R134a systems whenever the evaporator is replaced, the heat exchanger must also be replaced as well as the compressor. The replacement evaporator will come with the heat exchanger attached. Leave the caps in place on the opposite end of the heat exchanger. Again, whenever the evaporator and heat exchanger are replaced on R134a units, **the compressor must also be replaced** and the sealed system flushed. Do not connect the suction line to the replacement compressor until the system has been flushed ***(see System Flush Procedure)***. After mounting the evaporator in place, connect the capillary tube of the heat exchanger to the replacement drier.

HEAT EXCHANGER

The heat exchanger is composed of the capillary tube and suction line soldered together. The heat exchanger should be replaced if there is a non-repairable leak, plugged capillary, more than 3 inches have been removed from the capillary or the capillary tube separates from the suction line. If the heat exchanger is replaced, the evaporator must also be replaced as well as the compressor.

COMPRESSOR

The compressor is the "heart" of the refrigerator, consisting of an electrical motor and a "pump" sealed inside a steel case. The compressor used on R134a refrigerant systems is virtually the same in external appearance as the compressor used with R12 refrigerants. However, due to changes in lubricants and other internal differences, the compressors are **not** to be interchanged, otherwise system failure will result. Diagnostic procedures will be the same as with the R12 refrigerant systems except that the high side pressure will be slightly higher and the low side pressure will be slightly lower. If a new compressor is to be installed, pull one of the plugs to ensure that it is properly pressurized. If no pressure is observed, do not use the compressor. If unit is pressurized, reinstall the plug and keep the compressor sealed until it is installed and ready for solder connections. Whenever the compressor is replaced on a R134a refrigerator, the sealed system must be flushed ***(see System Flush Procedure).***

© 1997 Maytag Corporation

SYSTEM FLUSH PROCEDURE

Before accessing the sealed system, it is necessary to determine that the problem is actually a sealed system problem by utilizing a wattmeter, thermometer, visual and touch indicators. Once it has been determined that the problem is in the sealed system, and diagnosis indicates a low side leak, plugged capillary tube, or a defective compressor, in addition to the normal repair, the system must be flushed and the compressor must be replaced.

SEALED SYSTEM REPAIR SUMMARY

A. Recover the refrigerant in the system, if any.

B. Repair the low side leak or replace the evaporator and heat exchanger, whichever applies. If the complete low side is replaced, do not braze the suction line to the replacement compressor until the completion of Step 3.

C. Proceed with the following flush procedure which includes the compressor replacement.

D. After flushing procedure is completed, continue with the normal sweep and final charging procedure.

SYSTEM FLUSH PROCEDURE

1. Isolate and flush the Condenser

Score and break the discharge line at a convenient location to which the replacement compressor tubing can be connected later. Attach a process tube adapter to the condenser side of this break. Connect a quick coupler hand valve to the process adapter. Connect the hose from the charging cylinder to this valve ***(refer to figure 1).*** This connection will remain in place throughout the flush procedure in Step 3.

NOTE: ***Due to the extra flushing and sweep charge procedures, about 12 ounces of R134a refrigerant should be added to the original charge specified on the model/serial plate and loaded into the charging cylinder initially.***

Next, score and break the tube at the yoder loop to the input side of the drier. Attach a process tube adapter to the condenser side of this break. Connect a quick coupler hand valve to this process adapter. Connect the hose from the recovery equipment to this valve ***(figure 1).*** Use the heater on the charging cylinder to ensure the cylinder pressure to be approximately 30 pounds above room ambient temperature. For example, if room temperature is 70 degrees, cylinder pressure should be 100 p.s.i.g. Start the recovery system and open the valve at the process adapter attached to yoder loop. Open the valve from the charging cylinder and allow 4 ounces of R134a to flow through the condenser and into the recovery system. This process should take about two minutes. Keep the process adapters and hoses attached at this time.

© 1997 Maytag Corporation

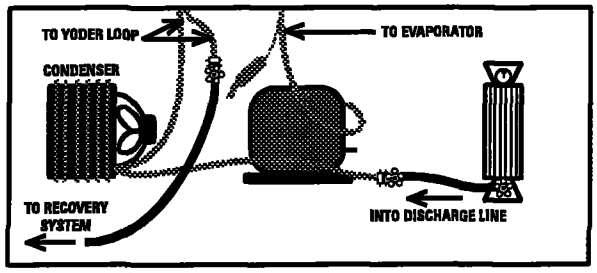

FIGURE 1

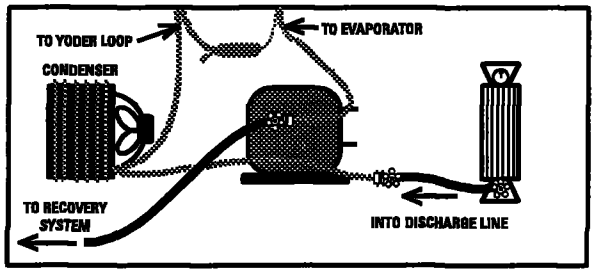

FIGURE 2

Flush into discharge line, through hi-side and out the yoder loop at drier inlet.

2. Replace the Drier

Score and break either one of the two inlet lines on the new drier (the other line will remain sealed until the sweep charge, at which time it will be the process tube). Prepare the drier outlet side for connection to the capillary tube. The capillary tube should be inserted about 3/4 inch into the drier to prevent solder alloy from plugging the capillary tube or the capillary tube extending too far into the drier and contacting the screen. To facilitate the installation, place a slight bend in the capillary tube about 3/4 inch from the end and insert into the drier. Remove the process tube adapter from the yoder outlet and prepare the tube for connection to the drier inlet. The drier inlet joint will be the only copper-to-steel connection which will require the silver solder and flux. To help prevent flux from entering the system, first insert the line from the yoder loop into the drier inlet, then apply the flux. Braze both the inlet and the outlet joints of the replacement drier.

Flush the entire system (less compressor) out the suction line.

3. Isolate and flush the remainder of the system

Score and break the suction line close enough to the old compressor to be able to reconnect it to the replacement compressor later. Attach a process tube adapter to the evaporator side of the suction line. Connect the hand valve and hose from the recovery equipment to this adapter ***(figure 2)***. Be certain that the pressure in the charging cylinder is about 30 p.s.i.g. above ambient temperature. Start the recovery unit and open the hand valve to the suction line. Release four (4) ounces of R134a from the charging cylinder into the system. It will take about 15 minutes for the refrigerant to pass through the condenser, yoder loop, drier, capillary tube, evaporator, suction line and into the recovery system. This 15 minutes time can be utilized to remove the old compressor ***(figure 3***) and prepare the new compressor by mounting into place and wiring electrically. Remember to leave the plugs in place until brazing ***(refer to figure 4).***

© 1997 Maytag Corporation

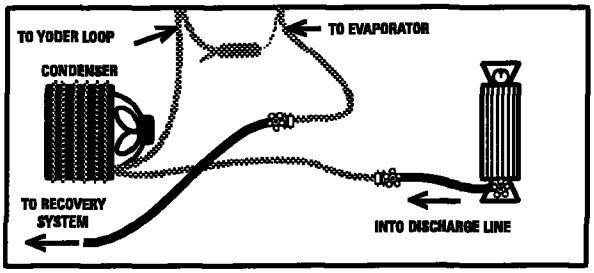

FIGURE 3

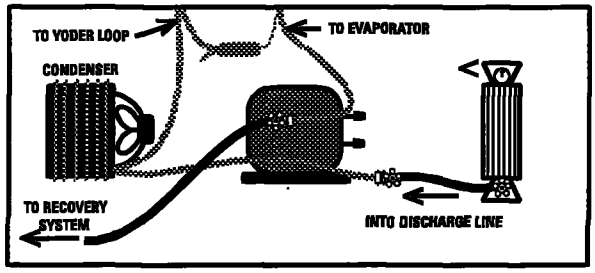

FIGURE 4

During final flush, remove old compressor, and install replacement compressor leaving plugs in place until brazing.

4. Complete compressor replacement

Close valves to the recovery system. Remove process tube adapters from both the suction and discharge lines.

⚠ CAUTION

In order to prevent sealed system contamination the time of atmospheric exposure must be limited to 15 minutes. Do not pull the plugs from the new compressor until you are ready to make the connections.

Connect and braze suction and discharge lines to the replacement compressor ***(figure 5).*** You are now ready to add the temporary piercing valve to the drier process line and proceed with the sweep and final charging of the system.

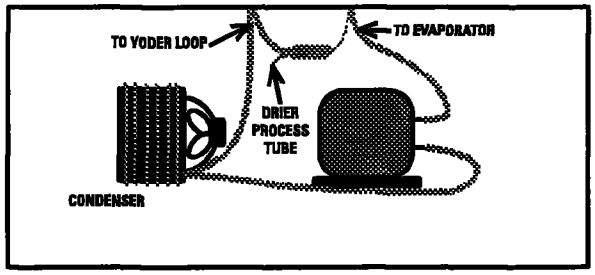

FIGURE 5

Flush complete - ready for sweep charge.

© 1997 Maytag Corporation

SWEEP AND FINAL CHARGE

The sweep charge is a method of purging the sealed system of moisture, air and potential contaminants. Also during this procedure, the system may be checked for leaks before the final charge. If this procedure is followed as outlined, it will allow for the capture of 90-95 percent of the available refrigerant, thereby ensuring that the system will operate as designed.

The sweep procedure for R134a refrigerant systems is made after the system has been repaired and/or flushed. Three (3) ounces of refrigerant R134a is added to the system, circulated by the compressor for 5 minutes and recovered. Since a new drier - part **#13900-1** has already been installed, a high side process tube is available. Install a temporary access valve to this process tube close enough to the end of the tube so that the tube can be pinched closed behind the valve and the opening sealed shut after the valve is removed. Remember, no access valve is to be left on the sealed system. Connect a 1/4 inch flare tee to the access valve. Connect a quick coupler hand valve to each side of the tee. To one hand valve, connect the hose from the charging cylinder. To the other valve, connect the hose to the recovery system.

The following steps take you through the sweep and final charge.

- **Step 1.** Set up of valves: temporary access valve (C) piercing drier process tube, connected to flare tee, hand valve (A) to charging cylinder, hand valve (B) to recovery system.

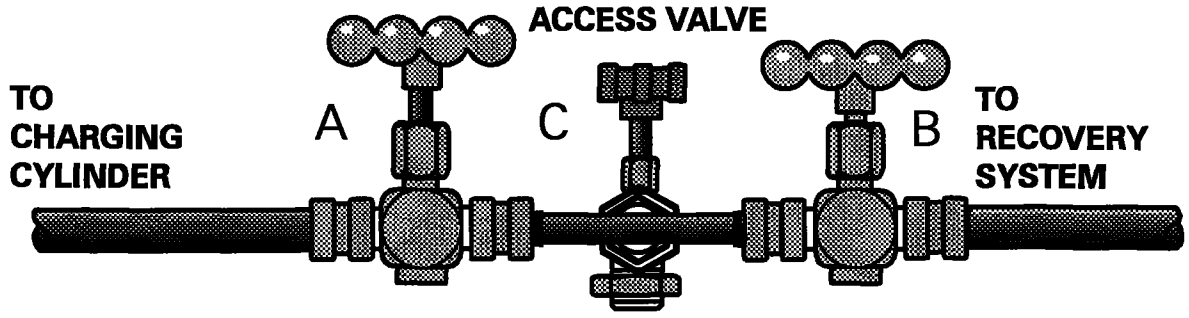

- **Step 2.** With liquid refrigerant present to valve A, valve B closed and valve C open (C will remain open throughout sweep procedure), open valve A to allow three (3) ounces of refrigerant into the system. Close valve A. Check low side for leaks. After system has equalized (about 3 to 5 minutes), start system compressor, check for high side leaks and allow refrigerant to circulate in the system about 5 minutes.

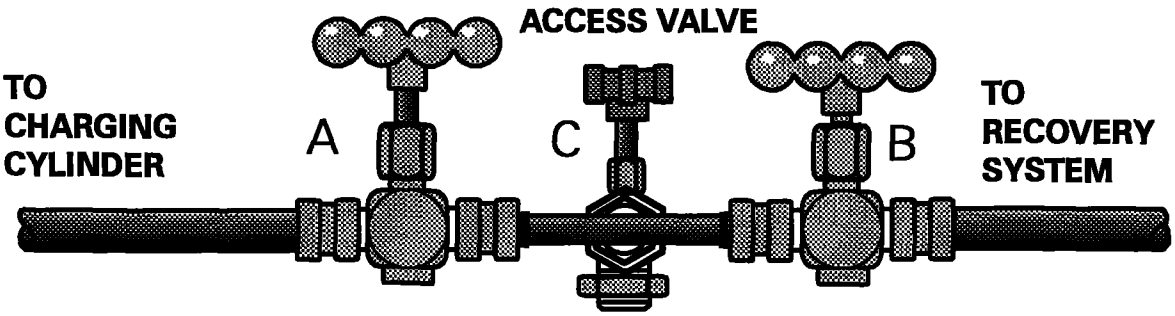

© 1997 Maytag Corporation

•**Step 3.** Leave valve A closed and valve C open. System compressor still running, open valve B to allow refrigerant to flow into the recovery system. After vacuum has been held, turn off system compressor.

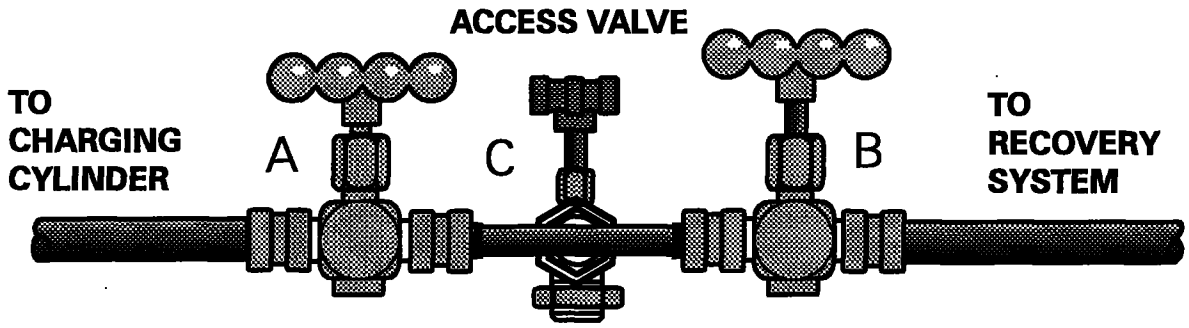

•**Step 4.** Close valve B. Liquid refrigerant still present to valve A and charging cylinder pressure is 30 p.s.i.g. above room ambient. Open valve A to slowly allow the proper refrigerant charge into the system. Close valve A. If needed, valve C can be closed and valves A and B opened to recover refrigerant in the hoses and charging cylinder.

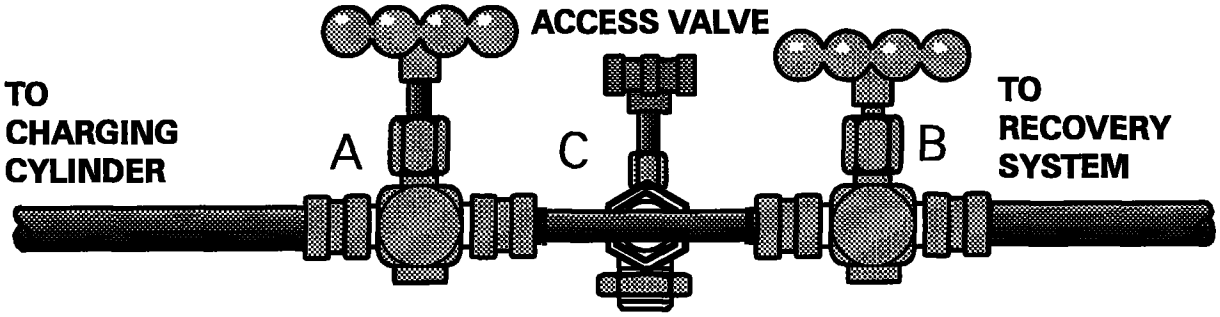

•**Step 5.** Use pinch-off tool to seal the process tube between the drier and the access valve. Remove the access valve and braze the opening. After the required five minute equalization time, start the system compressor.

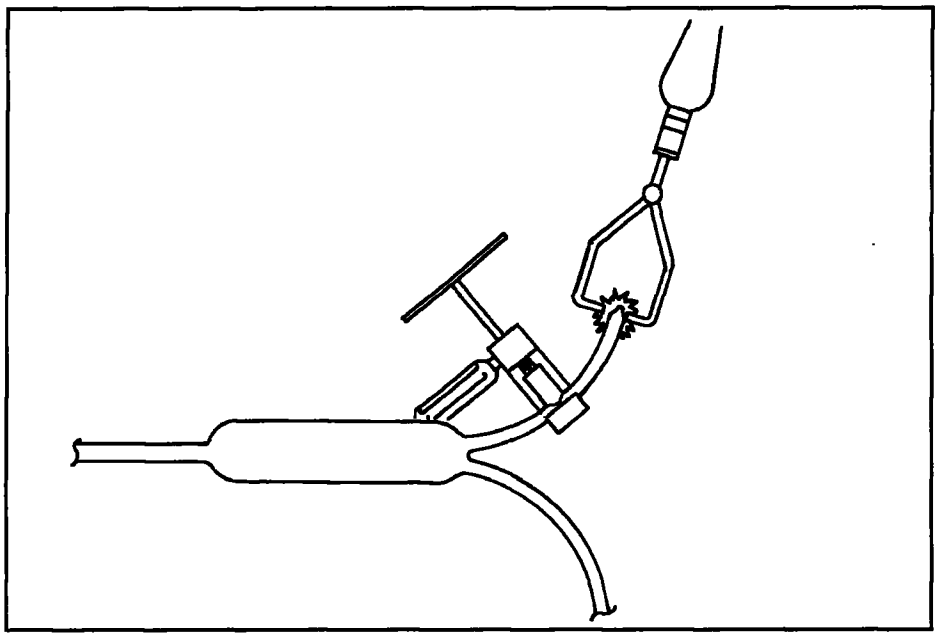

© 1997 Maytag Corporation

SECTION 2. COMPONENTS

REPLACEMENT - COMPRESSOR

The following general information explains how to successfully replace compressors for any model covered in this manual.

All replacement compressors are charged with correct amount of oil and a holding charge of dry nitrogen.

The holding charge is your assurance that the compressor is dry and ready to install. If you receive a replacement compressor that shows no evidence of holding charge when you center the lines or remove the plugs, return it.

NOTE: ***A new drier must be installed each time any component of the system is opened or replaced.***

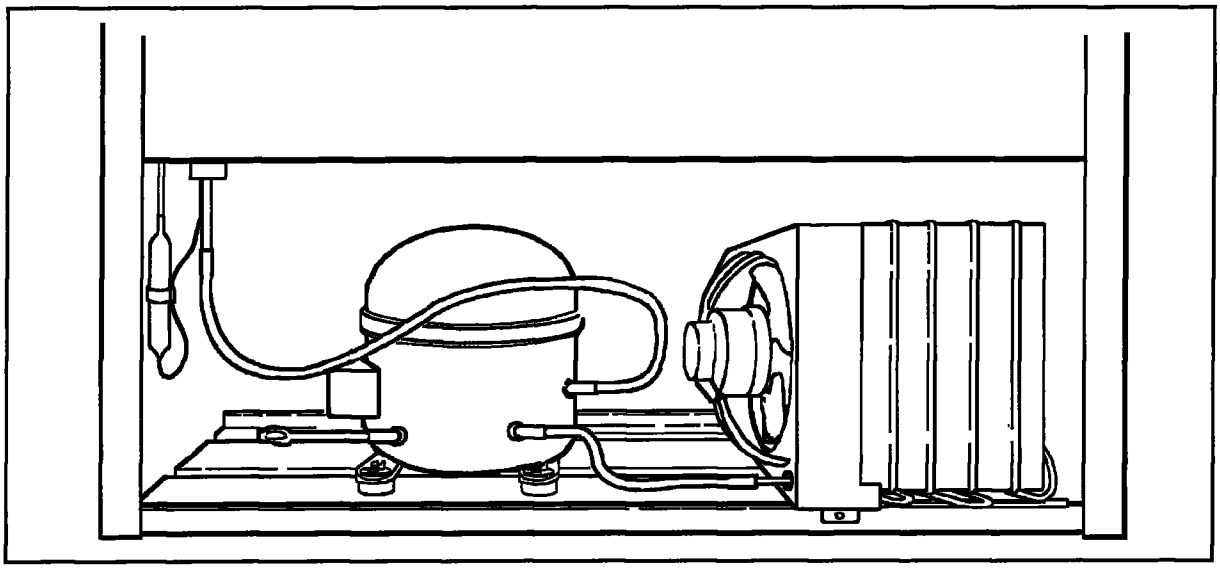

REPLACING THE COMPRESSOR

1. **Disconnect the unit from the power source.**

2. Locate defective compressor and evacuate the sealed system. ***(See Sweep Charging and Refrigerant Recovery.)***

3. Clean and cut the refrigerant lines as close as possible to the compressor stubs making sure there is enough length to install the replacement compressor.

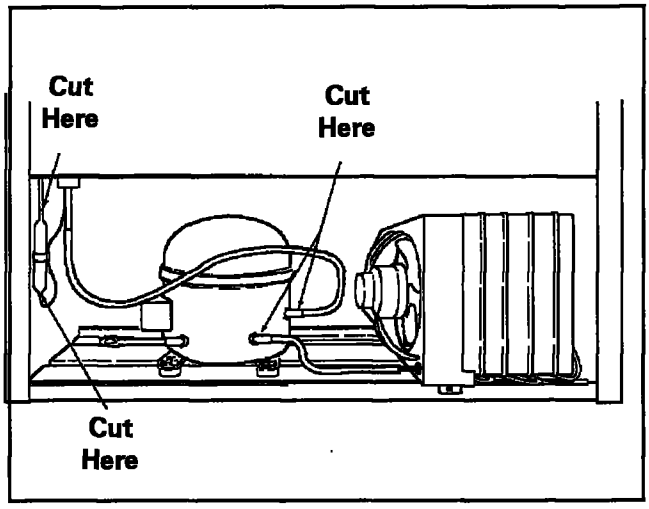

© 1997 Maytag Corporation

4. Disconnect the lead wires from the compressor terminals.

5. Remove the retaining clips from the compressor mounts. Remove defective compressor from cabinet and install rubber grommets on replacement compressor.

6. Clean the compressor stubs with abrasive cloth such as grit cloth No. 23. Do not open the compressor stubs.

7. Install the replacement compressor using the mounting clips previously removed.

8. Connect the compressor leads.

9. Solder a short piece of tubing to the process tube (approximately 6 inches long), connect the refrigerant tubing to the compressor stubs using silfos on copper to copper joints and silver solder and flux on steel to copper joints.

Locate and remove old drier. Install new drier. The new drier is installed in the following manner.

a. Carefully bend the old drier and tubing away from electrical parts.

b. Use steel wool or fine emery paper to clean the capillary tube for a distance of 3 inches from the original joint. Also, clean the input tubing to the drier a distance of 3 inches from the original joint.

c. Use steel wool or fine emery paper to clean both ends of the new drier. Use a knife or file to score the capillary tube about 1 inch from the original joint. Use your finger to break the connection.

d. Make an offset 1/2 inch from the end of the cap tube to prevent it from penetrating too far into the drier.

e. Cut the inlet tube of the replacement drier and use pliers to snap off the scored end.

f. Install the new drier using silver solder with the proper flux at the Yoder tube to drier joint use silfos at the drier to capillary tube joint.

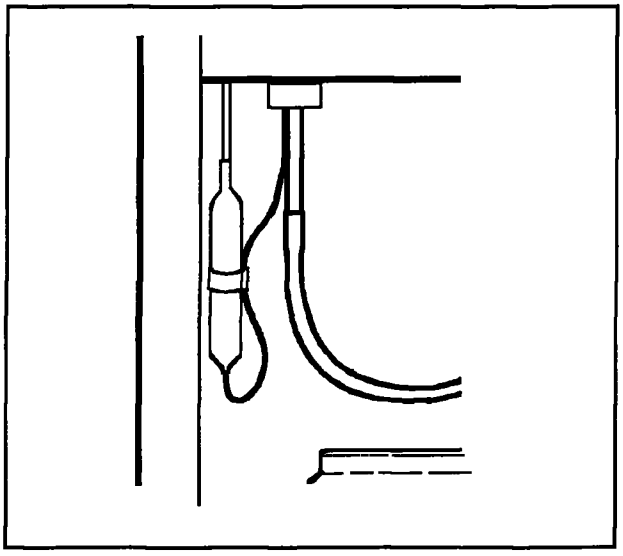

10. Evacuate, recharge and leak test the system.

11. Test run the unit to make sure it is operating properly.

12. Replace the machine compartment cover.

Condenser

The following general information explains how to successfully replace the condenser for any model covered in this manual.

© 1997 Maytag Corporation

Replacing the Condenser

1. **Disconnect the unit from the power source.**

2. Remove all loose items from the refrigerator interior.

3. Working at the back of the cabinet remove the cover from the machine compartment. It is necessary to reinstall this cover after the job is completed.

4. Using a sponge remove any drain water from the defrost pan.

5. With assistance, tilt the cabinet back and remove the front condenser mounting screw.

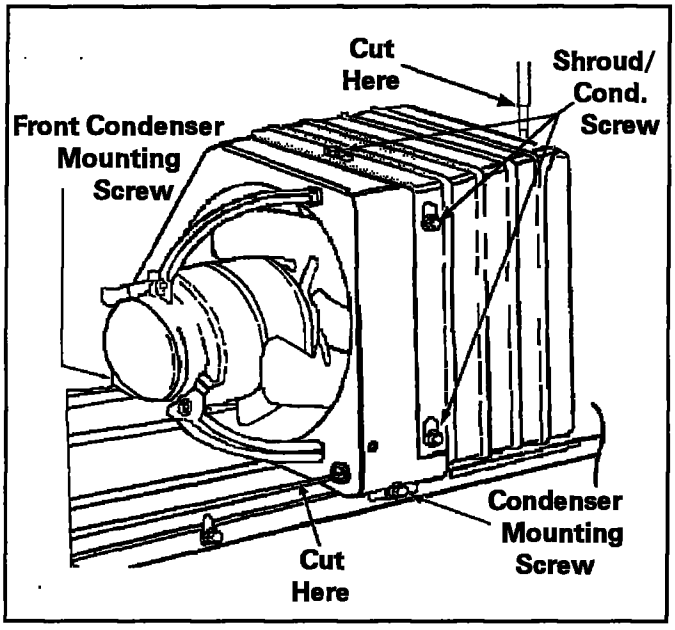

6. With assistance, set the cabinet back up, remove the back condenser mounting screw.

7. Disconnect the fan motor wire lead connector.

8. Use steel wool or fine emery paper to clean both the inlet and outlet end of the new condenser.

9. Evacuate the seal system. ***(See Sweep Charging and Refrigerant Recovery.)***

10. Clean and then cut the inlet and the outlet tube of the old condenser.

11. Remove the condenser assembly from the compressor mounting pan and set it on a workable surface.

12. Remove the shroud/condenser screws which secure the fan motor shroud to the condenser.

13. Transfer all clips to the replacement condenser and make sure that the condenser tubing goes through the rubber sleeve on the fan motor shroud. Install the mounting screws.

14. Set the replacement condenser on the compressor mounting pan and install both front and rear condenser mounting screws.

15. Clean, then connect the discharge line to the inner tubing. Clean again, and connect the Yoder loop to the outer tubing of the condenser.

16. Solder all joints. Silver solder and proper flux should be used on copper to steel or steel to steel joints. Excess flux should be wiped off all tubing.

17. Remove and replace the old drier. Do not allow more than a 1/2 inch of the cap tube to penetrate the drier.

18. Install the new drier using silver solder with the proper flux.

19. Visually check the joints for leaks.

20. Connect the fan motor wire connector.

© 1997 Maytag Corporation

21. Evacuate, and recharge the system.

22. Test for leaks.

23. Install the machine compartment cover.

24. Test run the refrigerator to make sure it is operating properly.

ELECTRICAL SYSTEM

- The wiring diagram is located on the cabinet back and depicts the electrical system for that model.
- All electrical components are grounded to the cabinet.
- The green center conductor in the power cord is attached to the cabinet to provide a ground circuit when the cord is plugged into a properly grounded outlet.
- After replacing an electrical component, always make sure the ground wire is reconnected.
- The electrical outlet should be checked to make sure it is properly wired. Check the outlet with a circuit tester.

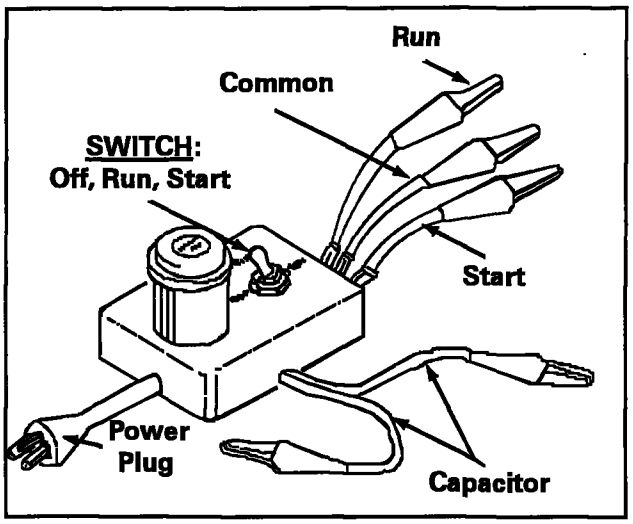

Testing the Compressor Direct

Testing the compressor with no other wiring in the circuit is called the direct test method. Remove all electrical components from the compressor in order to perform this test. It is recommended that a compressor tester as illustrated above, be used to make this test:

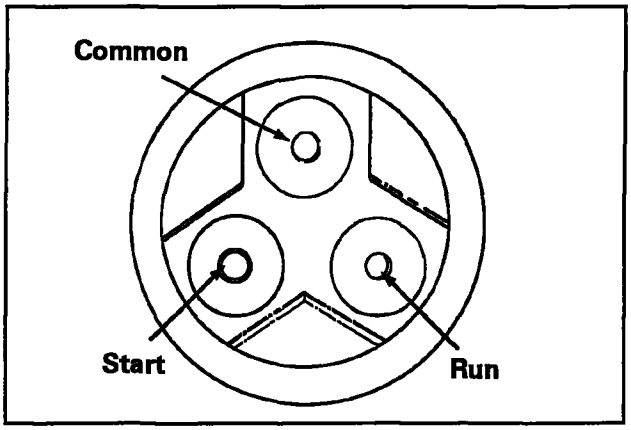

The tester leads are marked RUN, START, and COMMON. Connect the common lead to the common terminal of the compressor, the start lead to the start terminal and the run lead to the run terminal. The compressor terminal arrangements are illustrated above. The other two leads are for a start capacitor (if used). When not in use, attach the two leads together and place the toggle switch in the OFF position. Making sure there are no bare leads touching the cabinet. Plug in the tester and flip the switch to the start position. As soon as the compressor starts, release the switch to the run position. If the compressor is operative, it will continue operating on the run windings. If the compressor fails to run, the compressor is defective and must be replaces.

© 1997 Maytag Corporation

Overload Protector

The overload protector prevents the compressor from burning out its electrical windings in the event the compressor becomes overheated or draws too much current. The overload trips, opening the circuit to the compressor. If it does this repeatedly, the compressor is said to be cycling on the overload.

Cycling on the overload may be caused by:

1. Insufficient air circulation around the compressor and condenser.
2. Pull-down on the compressor, caused by a large quantity of warm food placed in the refrigerator.
3. Compressor stalling due to lack of pressure unloading.
4. Low line voltage.
5. Defective starting relay.
6. Defective winding in the compressor or shorted windings.

Testing the Overload Protector

Disconnect the unit from the power source.

To test the overload protector, remove the compressor terminal cover. Examine the bottom of the overload for signs of arcing. If signs of arcing are present, either check for continuity or connect a jumper wire across the terminals.

If using a jumper wire, plug in the line cord and set the temperature control to a cold setting. If the compressor starts, the over load is defective and must be replaced. If the compressor fails to start, check for a defective starting relay or compressor.

1. Remove the PTC and overload from the compressor.
2. Connect one ohmmeter probe to the compressor shell. Make sure the probe makes good contact with bare metal. Connect the other ohmmeter probe to each of the three compressor terminals, one at a time.
3. If the meter shows no continuity to ground, install PTC and overload protector to the compressors terminals. If the meter indicates the compressor terminals, are grounded, replace the compressor.
4. Attach a jumper wire across the overload terminals.
5. Make sure the jumper wire does not short to ground.
6. Reconnect the unit to power source. If the compressor starts, the overload protector is defective and must be replaced.

© 1997 Maytag Corporation

PTC Starting Device And Run Capacitor

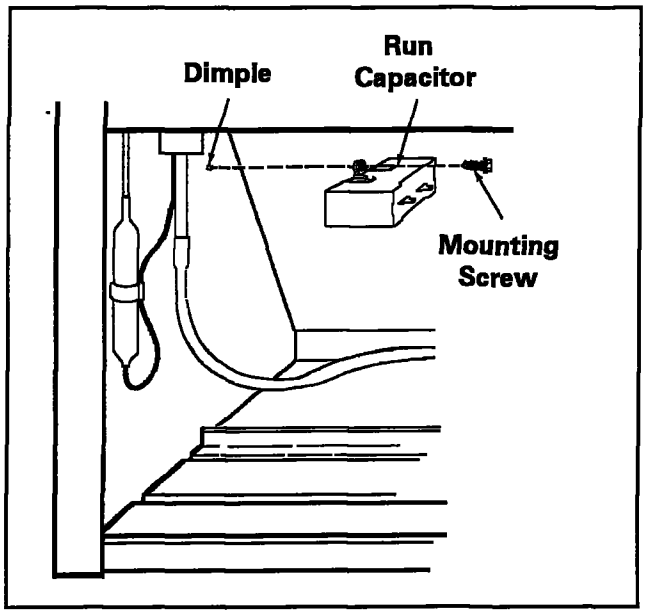

The PTC solid state starting device is a push-on component mounted to the start and run terminals of the compressor. This device is connected in parallel with the run capacitor and is in series with the compressor start windings. This will produce a short circuit across the run capacitor during the compressor starting sequence and full current is applied to the start windings as well as the main winding. Since the PTC device is temperature sensitive, a variance in its temperature causes a change in its resistance. When current is first applied to the compressor the PTC device's low resistance shorts out the run capacitor, thus producing adequate motor starting torque.

As the compressor motor approaches running speed, the current through the PTC device causes the temperature and resistance of the PTC device to increase to where it appears to be an open circuit. The compressor continues to operate on the run winding in parallel with the series combination of the run capacitor and start winding.

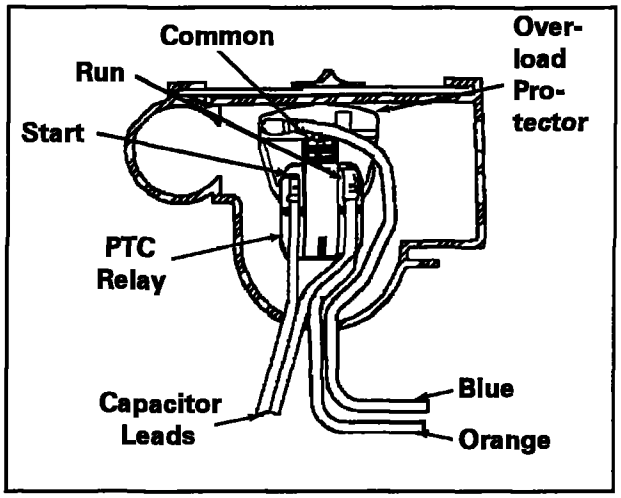

CHECKING THE PTC DEVICE

1. **Disconnect the unit from the power source.**
2. Discharge the capacitor.

   NOTE: ***See "Testing The Capacitor" on page 2-7.***
3. Remove the wires from the PTC device terminals.
4. Allow the PTC to cool to room temperature.
5. Remove the PTC device from the compressor.
6. Using an ohmmeter, check the resistance between the PTC device terminals. The ohmmeter should register between 3 and 20 ohms.

An extreme variance between 3 and 20 ohms indicates a defective PTC device which must be replaced.

NOTE: We discourage using a voltmeter to check the performance of the PTC device because the test results are influenced by several factors such as its dependences on the line voltage to the

© 1997 Maytag Corporation

compressor, the response characteristic of the voltmeter and the PTC device temperature at the time the compressor is energized.

REPLACING THE PTC DEVICE

1. **Disconnect the unit from the power source.**
2. Disconnect the PTC from the compressor terminals.
3. Remove the lead wires from the PTC terminals.
4. Replace the PTC and reconnect the wires to the proper terminals.

RUN CAPACITOR

The run capacitor is mounted adjacent to the compressor. It is electrically connected to the compressor circuit to provide the required phase difference between the start and run windings for running the compressor.

Capacitor Failures May Be Caused By:

(1) **A Short Circuit** - Will cause the start windings to be energized in the start mode all the time. The compressor could start, but the overload protector would eventually trip, and sooner or later, trip continuously.

(2) **An Open Circuit** - Should, under normal conditions, allow the compressor to start. Under a heavy running load, however, the compressor will usually trip on the overload.

(3) **A Capacitor Low in Capacitance** - A capacitor may lose capacitance by a loss of its electrolytic properties. The compressor would run under a light load, but would trip on the overload in high ambient conditions.

TESTING THE CAPACITOR

⚠ WARNING

Personal Injury Hazard

Discharge a capacitor before handing. Short across its terminals, using a resistor with a minimum resistance of 1,000 Ohms.

We recommend using a capacitor analyzer when testing. Preferably a solid state unit that measures capacitance and power of any capacitor, and has an automatic means of discharging the capacitor through resistance.

Alternate Method Using Ohmmeter

1. **Disconnect the unit from the power source.**
2. Disconnect the capacitor lead wires.
3. Short across the terminals using a resistor with a minimum resistance of 1,000 ohms to be sure no charge remains to damage the ohmmeter.
4. Set the ohmmeter selector switch to the 10,000 ohm scale (R x 10K).
5. Connect the ohmmeter leads to the capacitor terminals and observe the meter point lower end.

© 1997 Maytag Corporation

a. If the pointer deflects to the lower end and remains there, the capacitor is shorted and must be replaced.

b. If there is no deflection of the pointer, the capacitor is open and must be replaced.

c. If the pointer deflects towards the high end of the scale and then slowly return toward the low end, the capacitor is good.

TEMPERATURE CONTROL

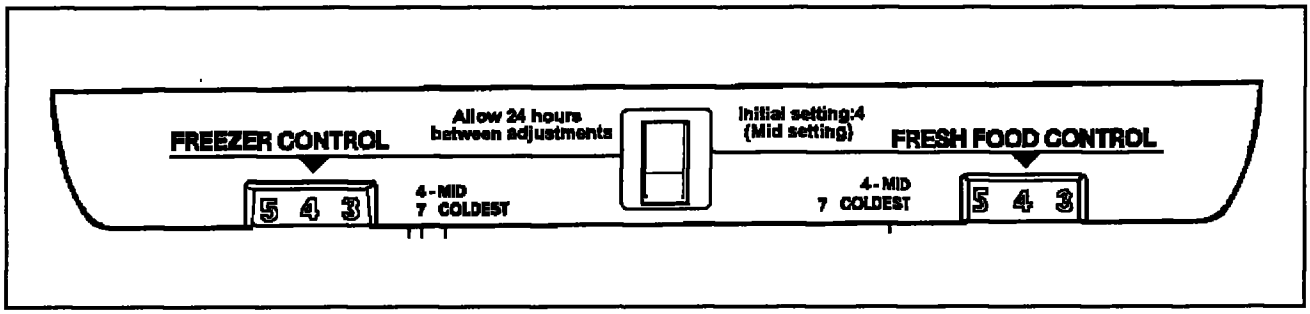

The refrigerator has two temperature controls:

1. **Fresh Food Compartment** - The fresh food temperature control senses the temperature of its compartment and governs the compressor operation accordingly.

2. **Freezer Compartment** - The freezer compartment control adjusts baffle which regulates the amount of air allowed to enter the fresh food compartment.

Turning the freezer temperature control toward the coldest settings reduces the flow of chilled air to the fresh food compartment. Because the fresh food temperature control uses a sensing element that must be cooled sufficiently before stopping the compressor, the reduced air flow causes longer compressor run time and colder freezer temperatures, while maintaining the required fresh food compartment temperatures.

Conversely by turning the freezer temperature control towards the warmest setting, you increase the flow of air into the fresh food compartment and decrease the flow to the freezer. This cools the fresh food compartment temperature control sensing element faster, resulting in shorter compressor run times and warmer freezer compartment temperatures. The fresh food compartment will stay near the recommended fresh food temperature unless the freezer temperature is turned to an extreme temperature. The differential between cut-in / cut-out temperature will vary approximately 10°F.

CHECKING OPERATING TEMPERATURES

The temperature control feeler tube is located in the fresh food compartment. The feeler tube is wrapped around a thermal mass located in the back right corner of the control housing. A small amount of air passes over the thermal mass which gives a consistent run time

© 1997 Maytag Corporation

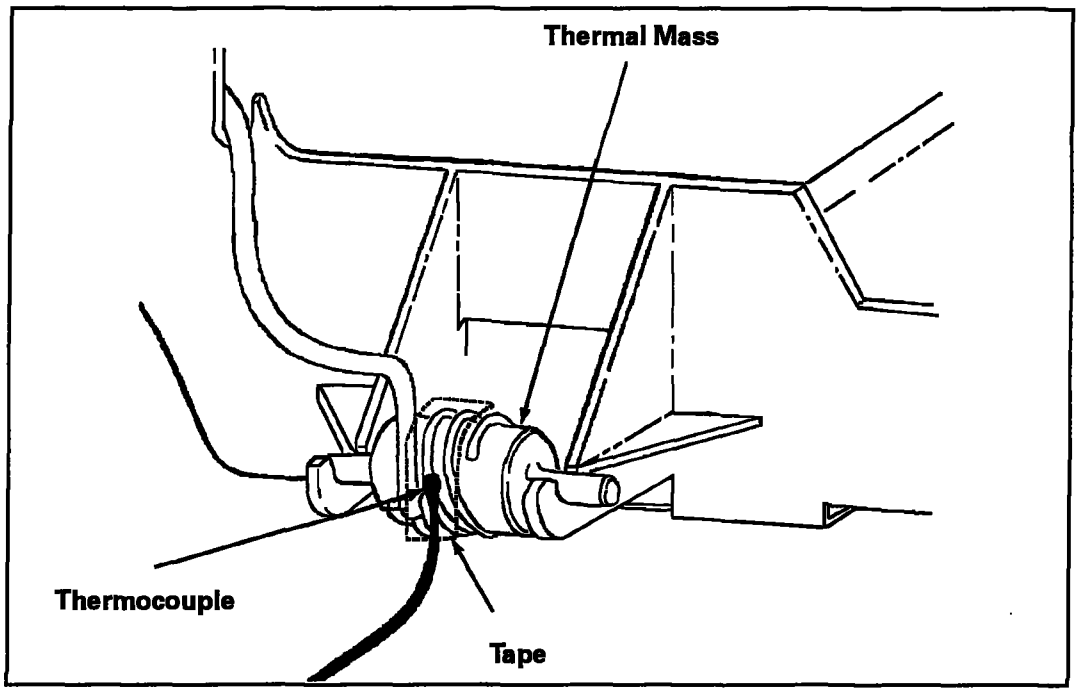

during ambient changes. To check the cut-in / cut-out temperatures, attach the bulb of thermistor temperature tester to the control feeler tube and set controls at mid-position.

Allow the compressor to complete two or three complete cycles. If the temperature readings are not within two degrees of the requirements the control is defective and must be replaced. Do not attempt to recalibrate.

A defective control may cause the compressor to run continuously or not at all. If either of these conditions exist, check as follows:

- ***Compressor Won't Run***

  1. Remove the control enough to expose its terminals.

  2. Short across the control terminals. If the compressor starts, install a new control. If the compressor fails to start, check the defrost timer, compressor receptacle, and unit wiring for defects.

- ***Compressor Runs Continuously***

  1. Turn the control knob to ***OFF***. If the compressor continues to run, proceed to step 2. If the compressor stops check the feeler tube to make sure it is positioned properly and that the air flow through the control housing is not restricted. If the feeler tube is positioned properly and there is no air restriction, check the control operating temperatures.

  2. Remove the control far enough to remove one of the wires from its terminal. If the compressor continues to run, there is a short in the unit wiring.

REPLACING TEMPERATURE CONTROL

1. **Disconnect the unit from the power source.**

2. Open the fresh food door, and remove any food product on the top shelf.

© 1997 Maytag Corporation

3. Remove the front mounting screw in the temperature control housing. While holding the front of the temperature control housing, remove the rear mounting screw. Lower the temperature control housing.

4. Disconnect the temperature control housing electrical quick disconnect.

5. Remove the temperature control housing from the refrigerator and place on a flat work surface.

6. Remove the control knob by pulling it straight away from the temperature control.

7. Remove the electrical and ground leads from the temperature control terminals.

8. Remove the control by pushing on the tab with right thumb to release the lock. With the left hand rotate the control out of its locking tabs.

9. To remove the thermal mass, insert a flat bladed screwdriver between the thermal mass and the control housing area. Turn the screwdriver to release the mass from its locking tab.

10. Install the replacement control in the reverse order of removal.

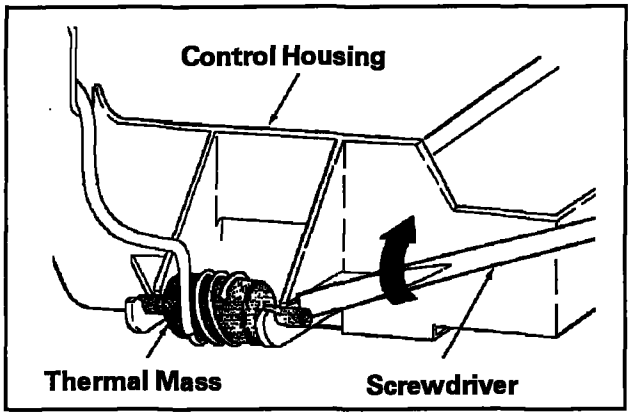

TO REMOVE THE THERMAL MASS

AUTO DAMPER CONTROL MODELS

The Auto Damper model refrigerator has two controls and both have capillary sensing. The Auto Damper controls the fresh food temperature and Freezer Temperature control, controls the freezer temperature.

The fresh food compartment temperature is maintained by a damper assembly located at the back of the temperature control housing. Changes in air temperature cause the damper door to open and close. A link belt and gears connect the fresh food control knob to the damper control.

Turning the fresh food control knob toward the ***COLDEST*** position increases the flow of freezer air into the fresh food section. The freezer compartment temperature control warms at a faster rate and cools at a slower rate, increasing the compressor run time necessary to maintain a satisfied freezer temperature control.

Turning the fresh food control knob to a ***WARMER*** setting decreases the flow of chilled air into the fresh food section. The freezer compartment temperature control warms at a slower rate and cools at a faster rate, decreasing the compressor run time necessary to maintain a satisfied freezer temperature control.

© 1997 Maytag Corporation

CHECKING THE AUTO DAMPER

1. **Disconnect the unit from the power source.**
2. Open the fresh food door and remove any food product on the top shelf.
3. Set the fresh food control to the coldest position.
4. Loosen the screws at each end of the facia and remove the front mounting screw in the temperature control housing.
5. While holding the front of the temperature control housing, remove the rear mounting screw. Gently pull the temperature control housing forward to clear the facia screws, then lower the housing.
6. Disconnect the temperature control housing electric quick disconnect.
7. Remove the temperature control housing from the refrigerator and place on a flat work surface.
8. Remove auto damper rear gear and belt from auto damper control.
9. Remove the freezer control cap tube from its holder.
10. Remove the auto damper and insulator from the control housing.
11. Mark the door position on the door housing.
12. Uncoil the auto damper capillary tube approximately four inches.
13. Submerge into a glass of ice (no water) watch for door to move towards closed position.
14. Remove from ice and warm capillary tube (warm using your hand), watch door for opposite reaction.

REPLACING AUTO DAMPER CONTROL

1. Do steps 1 through 9, checking auto damper.
2. Reinstall new auto damper an insulator assembly.
3. When reinstalling auto damper belt and rear gear, place large opening in belt over large cog on the auto damper rear gear.
4. Reinstall freezer control cap tube in it's holder.
5. Reinstall control housing in reverse order of removal.

© 1997 Maytag Corporation

AUTO DAMPER CONTROL MODELS

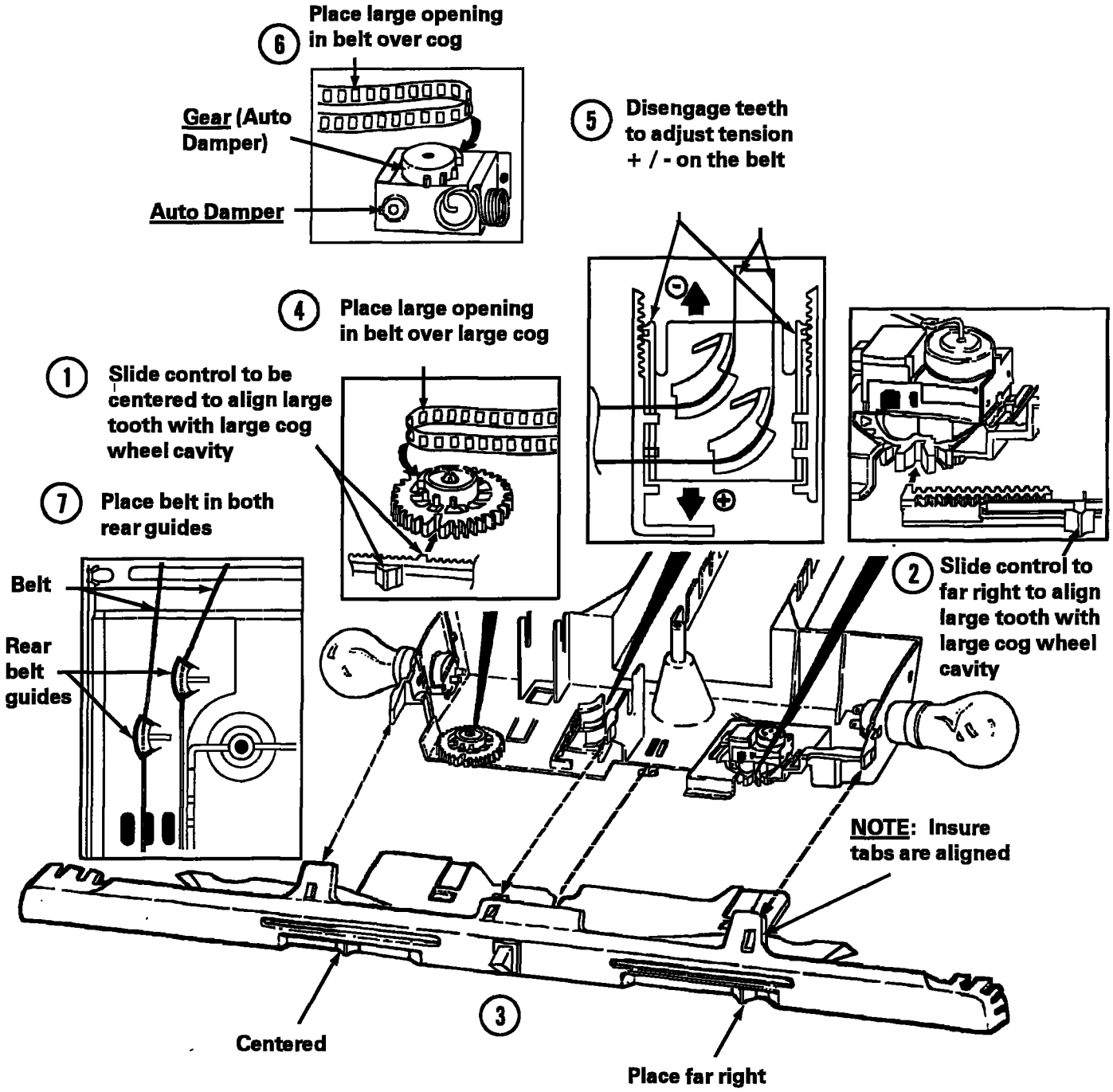

© 1997 Maytag Corporation

Defrost Timer

The freezer evaporator defrosting system is actuated by an electric timer. The timer is mounted in the control housing located in the fresh food compartment.

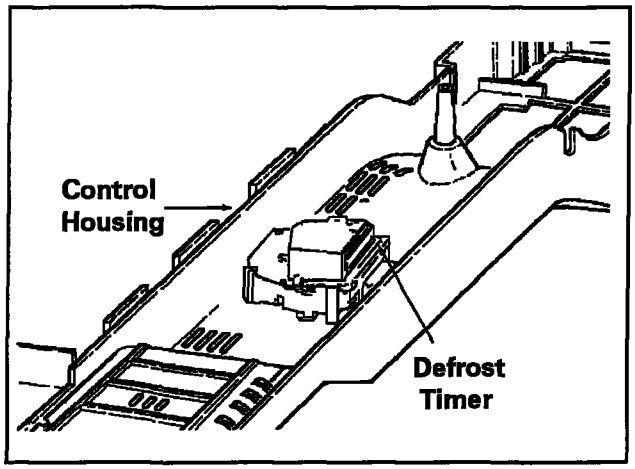

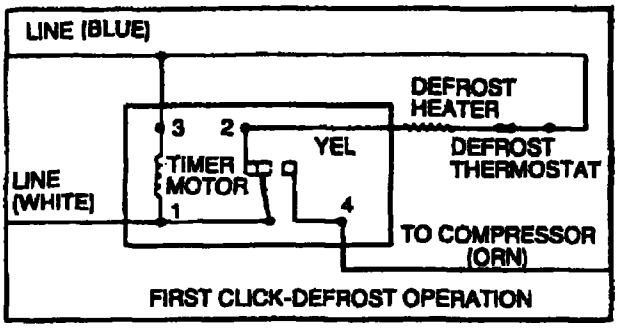

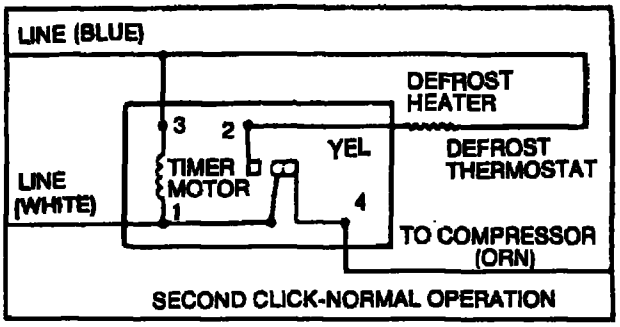

The timer control shaft is designed for screwdriver adjustment. When manually setting the timer to initiate defrosting, turn the control shaft clockwise until you establish the approximate location of the defrost cycle. Then turn the shaft slowly, and stop immediately when the first click is heard. The schematic illustrates the timer circuits in sequence.

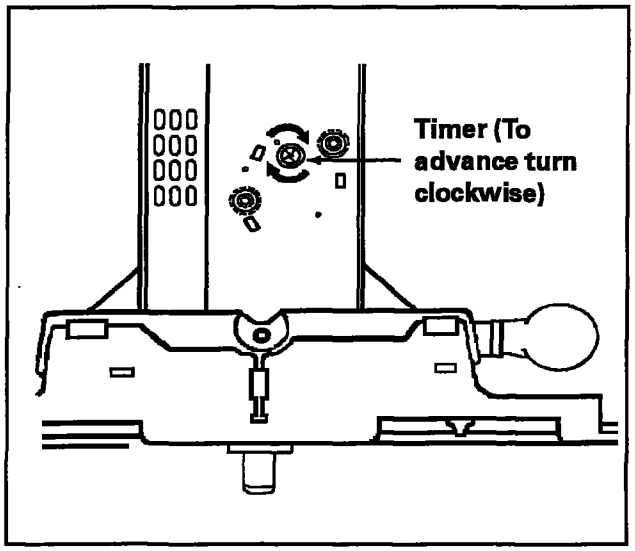

1st Click - The timer turns off the compressor and freezer fan circuit for approximately 21 to 23 minutes (see specification Section 6). At the same time, it energized the radiant heater. Once the temperature of the defrost termination thermostat reaches the cut-out point, the termination thermostat will open the circuit to the radiant heater. However, the compressor circuit remains open for the duration of the defrost interval.

2nd Click - The timer switches off the defrost circuit and starts the compressor, freezer fan, and the condenser fan motor. The compressor and fan motors are now governed by the temperature control for a period of approximately 8 to 10 hours (see data performance for the timer being used) of the compressor run time, after which a new defrost cycle begins.

© 1997 Maytag Corporation

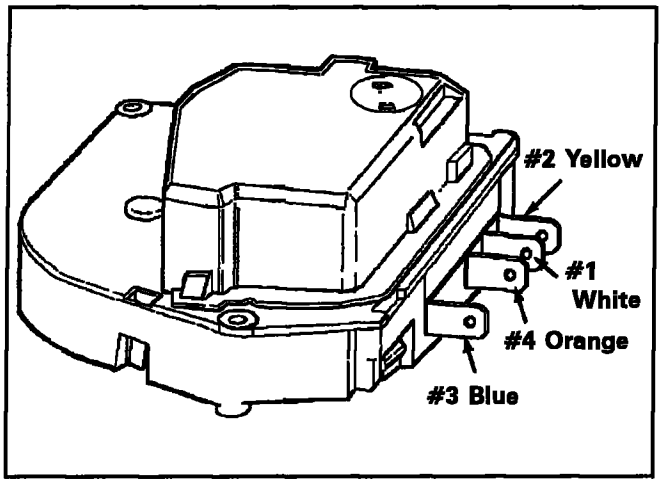

CHECKING THE DEFROST TIMER:

Disconnect all wires from the timer and attach ohmmeter probes to the terminals specified in the accompanying chart. If no continuity is indicated, the timer is defective.

To Test	Turn Timer Knob To **	Check Between Terminals
Timer Motor Circuit	Leave as is	1 & 3
Defrost Circuit	1st Click	1 & 2
Compressor Circuit	2nd Click	1 & 4

REPLACING THE TIMER

1. **Disconnect the unit from power.**
2. Open the fresh food door remove any food product on the top shelf.
3. Remove the front mounting screw in the temperature control housing.
4. While holding the front of the temperature control housing, remove the rear mounting screw. Lower the temperature control housing.
5. Disconnect the temperature control housing electrical quick disconnect.
6. Remove the temperature control housing from the refrigerator, and place on a flat work surface.
7. Gently push timer until it clears the two front locking tabs.
8. Rotate timer up toward back of housing.
9. Lift timer toward the front of the housing to clear the rear locking tab.
10. Disconnect the electrical connector from the timer.
11. Install the replacement timer in the reverse order of removal.

DEFROST HEATER AND THERMOSTAT

These models use a radiant heater to remove accumulated frost from the freezer evaporator and drain trough during a defrost cycle.

The defrost timer energizes the defrost heater every 8 to 10 hours of accumulated compressor run time. When the temperature in the thermostat area reaches approximately +38° F. the thermostat contacts open the circuit to the defrost heater.

The defrost heater is a spiral wound resistance wire enclosed in a heat resistant glass tube.

© 1997 Maytag Corporation

An ohmmeter check will determine if all phases of the defrost cycle are functioning properly. The defrost thermostat contacts open at approximately +38° F. and close at approximately +15° F.

The defrost thermostat has a 240K ohm resistor connected internally across the two terminals. This resistor permits checking the defrost heater even when the evaporator temperature is +15° F. or higher.

An ohmmeter can be used to test the defrost heater and thermostat without disassembling the freezer compartment even if the evaporator temperature is +15° F. or higher. To check, proceed as follows:

1. **Disconnect the unit from power source.**

2. Open the fresh food door and remove any food product on the top shelf. Remove the front mounting screw in the temperature control housing. While holding the front of housing, remove the rear mounting screw. Lower th control housing.

3. Disconnect the timer wire harness connector from the defrost timer.

4. Set the ohmmeter to R x 1K scale and connect the probes to the No. 2 and No. 3 terminals of the disconnect plug.

5. The meter should read between 20 to 40 ohms. The resistance is not critical. As long as there is continuity between terminals No. 2 and 3, the defrost heater is in operative condition. If there are no resistance readings (open circuit) the defrost heater and thermostat must be checked individually.

NOTE: ***When using the meter, avoid touching the probes since this could result in a false reading and misdiagnosis.***

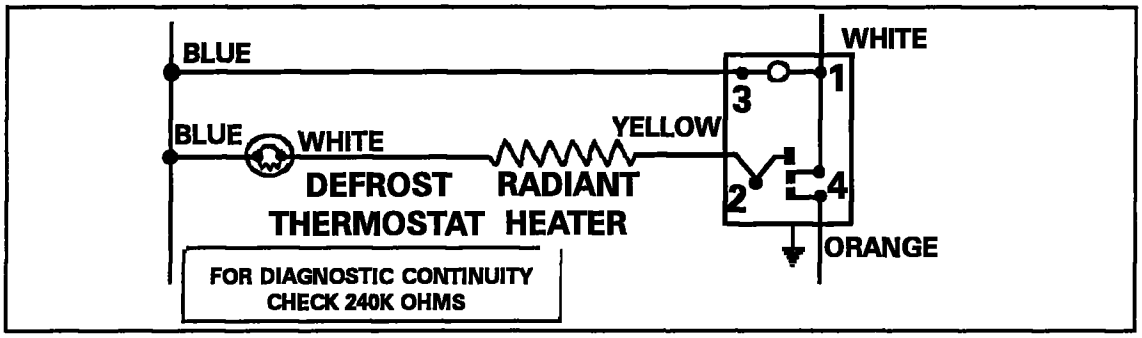

To test the defrost heater and thermostat when the evaporator temperature is +15° F. or below, proceed as follows:

1. **Disconnect the unit from the power source and plug it into a watt meter.**

2. Plug the watt meter into power source and manually advance the defrost timer to he defrost cycle. See the defrost timer section for information on manually advancing the timer.

3. The watt meter should read between 345 and 475 watts depending on the model (total wattage of the timer motor and defrost heater). Should the reading be 0 to 4.5 watts the defrost heater or thermostat is defective. To further isolate the defective part, proceed to step 4.

© 1997 Maytag Corporation

4. Disconnect the unit from the watt meter.

5. Follow steps 2 and 3 of testing the heater and thermostat when the evaporator temperature is above +15° F. or higher.

6. If the meter reads approximately 240K ohms, the defrost thermostat is defective.

To use an ohmmeter set the meter to **R x 1K** scale. If the reading is approximately 20 to 40 ohms, the defrost heater and thermostat are operative.

REPLACING THE RADIANT HEATER

1. **Disconnect the unit from the power source.**

2. Remove the ice maker if equipped.

3. Remove the evaporator cover by removing the four (4) corner mounting screws.

4. Tilt the top of the evaporator cover forward and disconnect the wire harness connector.

5. Remove the evaporator cover and fan motor assembly. It is very important that this part be reinstalled in the same manner as it was originally.

6. Disconnect the radiant heater wire leads. Using long nose pliers, remove the defrost heater retainer clips. (One on the right side of the heater and one on the left side).

7. Remove the heater and the shield. (***Note*** the placement and orientation of the shield, it goes between the heater and the ***Evaporator Cover***.)

8. Install the replacement heater in the reverse order of removal.

NOTE: ***When installing the replacement heater, do not touch the glass. Salt from finger tips could cause damage.***

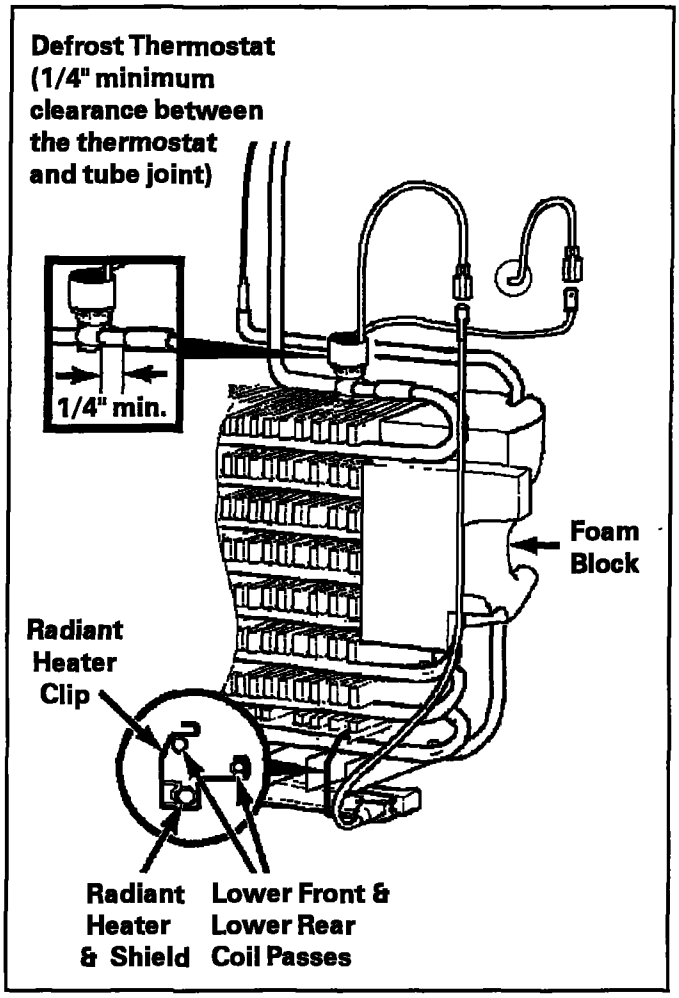

REPLACING THE DEFROST THERMOSTAT

The defrost termination thermostat is located on the top right side of the evaporator.

1. Follow the first five steps in replacing the heater.

© 1997 Maytag Corporation

2. Disconnect the leads from the thermostat.

3. Remove the defrost thermostat and mounting clip. This is done by releasing the mounting clip that is snapped around the evaporator tubing.

4. Install the new defrost thermostat in the reverse order of removal, make sure the thermostat is located per the drawing.

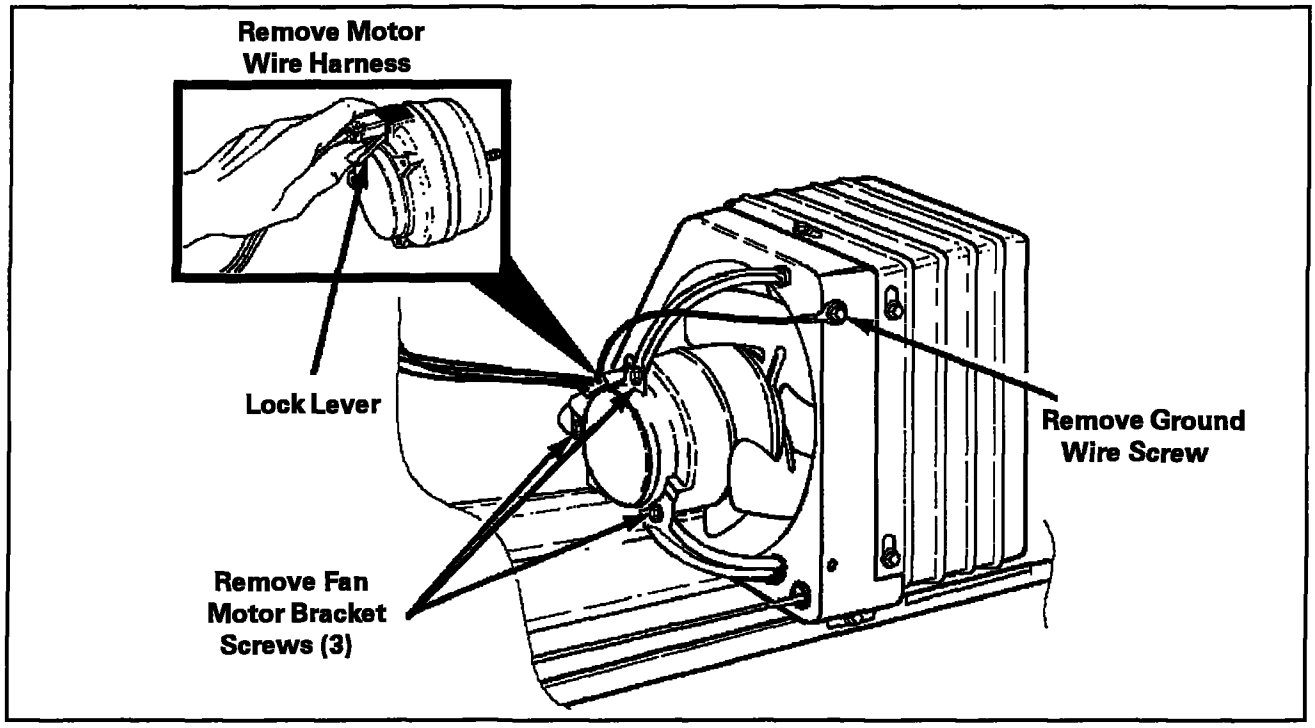

CONDENSER FAN MOTOR

The condenser fan motor is connected in parallel with the compressor. If the compressor runs but the motor doesn't the motor is either defective or disconnected. If neither operates, check the cold control, defrost timer, and the cabinet wiring.

TO CHECK THE CONDENSER MOTOR DIRECT

1. **Disconnect the unit from power source.**

2. Remove the insulated cover from the rear of the cabinet.

3. Disconnect the condenser fan motor lead connector on the motor terminals.

To remove the lead connector from the condenser fan motor, grasp the connector with your thumb inserted between the connector and the locking lever as shown then pull the connector away from the motor.

4. Attach a 115V test cord to condenser motor and plug into a power source. If the motor fails to operate it is defective and must be replaced.

© 1997 Maytag Corporation

REPLACING THE CONDENSER FAN MOTOR

1. **Disconnect the unit from power source and remove the insulated cover from the rear of cabinet.**
2. Disconnect the condenser fan motor lead connector on the motor terminals.
3. Remove the screws that mount the fan motor to the brackets.
4. Transfer the fan blade to the replacement motor making sure it is installed in the same manner as the original.
5. Install the fan motor leads and ground wire.
6. Install those parts previously removed, and test run the unit.

FREEZER FAN MOTOR

The freezer fan circulates the cooled air throughout the fresh food and freezer compartment. The fan blade is made of polyethylene and is pushed onto the shaft. It is important when replacing the fan blade that the hub of the fan blade faces outward towards the back of the freezer air tower. If the fan fails or operates erratically, the reduced air circulation will result in poor cooling characteristics.

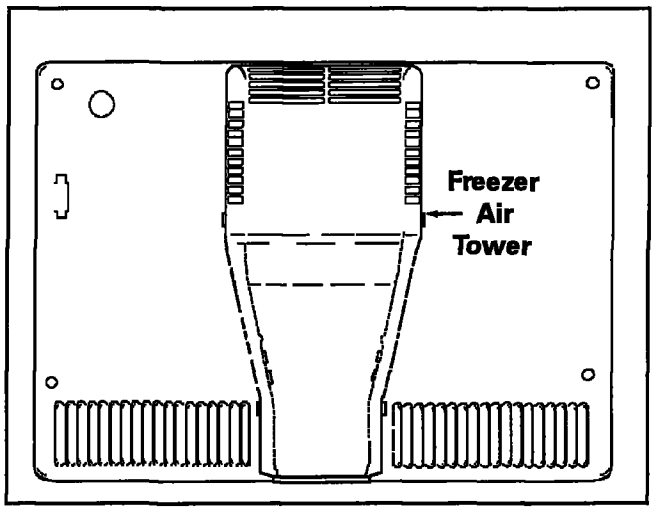

CHECKING THE FREEZER FAN MOTOR

1. **Disconnect the unit from the power source.**
2. Remove the ice maker, if equipped with one.
3. Remove the freezer shelving.
4. Remove the evaporator cover mounting screws.
5. Tilt the top of the evaporator cover forward and disconnect the wire harness connector.
6. Remove the evaporator cover and fan motor assembly and place it on a work surface.
7. Disconnect the evaporator fan motor leads. The wire leads are self-locking and it is important to squeeze the clip before pulling the leads off the terminals. Connect the motor terminals to a service cord and plug the service cord to the power source.
8. If the motor fails to operate, it is defective and must be replaced.

© 1997 Maytag Corporation

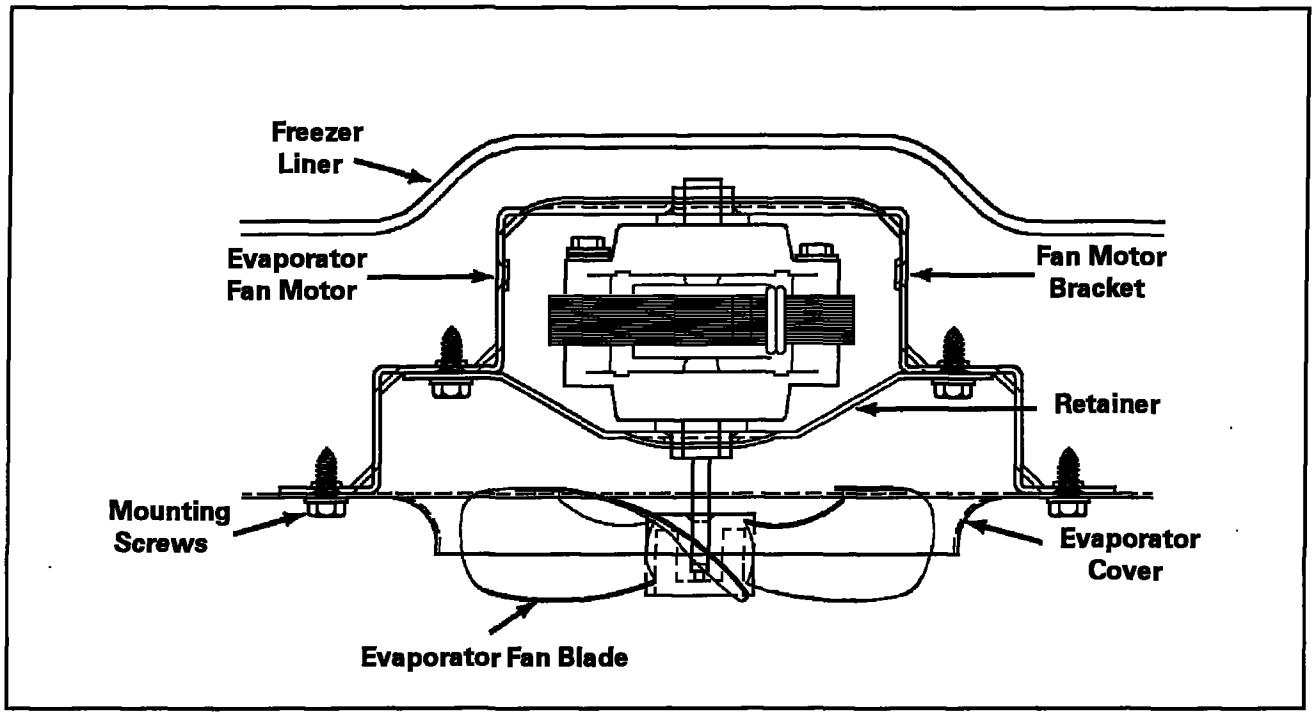

REPLACING THE FREEZER FAN MOTOR

1. Follow steps 1 through 5, "***Checking the Freezer Fan Motor***".
2. Remove the freezer air tower from the cover by pressing the mounting tabs inward. Remove the screws that secure the motor bracket assembly to the evaporator cover.
3. Remove the fan blade by pulling it off the shaft.
4. Remove the screws that secure the rear bracket to the front bracket. Remove the motor from the rear mounting bracket.
5. Install the new motor in the rear mounting bracket. Mount the rear bracket to the front mounting bracket.
6. Install the fan blade on the replacement in the same position as on the original motor shaft.
7. Install the motor and bracket assembly onto the evaporator cover.
8. Connect the wire leads and the ground wire to the motor.
9. Reassemble those parts previously removed and test the unit.

The fan blade is provided with a stop on the face of the hub. When the blade is positioned so the stop rests against the end of the shaft, it is properly installed.

© 1997 Maytag Corporation

© 1997 Maytag Corporation

SECTION 3. CABINET AND RELATED COMPONENTS

FOOD LINER

All food liners are made of a high impact polystrene material which has a glossy surface. All models are produced with foamed-in-place insulation and their liners cannot be replaced due to the bonding properties of the foam. Liners which are foamed-in-place can be repaired, using a liner patch kit or a tape kit, if the liner becomes cracked.

COMPARTMENT ACCESSORIES/ MOUNTING HARDWARE

Shelves

There are several different types of shelving used on the models covered in this manual. The following information can be used to determine which type you are working on and how it can be serviced.

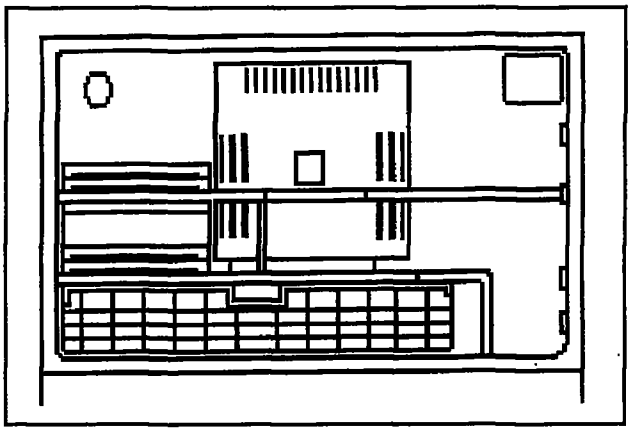

FREEZER SHELVES

Some models are equipped with a full width adjustable freezer shelf. This shelf can be removed by lifting the left end up about six inches and pulling the right end bars out of the sockets in the side wall. Reverse the removal procedure to replace the shelf, making sure the left end bars are pressed completely into the supports.

Some models have an expandable width freezer shelf which will adjust sideways to open up a full-height space for tall packages, such as pizza, the right side of the shelf is supported by a wide leg that slides sideways in channels on the underside of the shelf. The shelf can also adjust to two heights. This requires removing the shelf from the freezer, sliding the legs out of the channels, reinserting it in the alternate height position and returning the shelf to the freezer, to the alternative sockets. (Usually, the right support section will expand fully to the right wall surface, unless vertical storage of narrow packages is desired.)

Cantilever (Fresh Food) Shelves

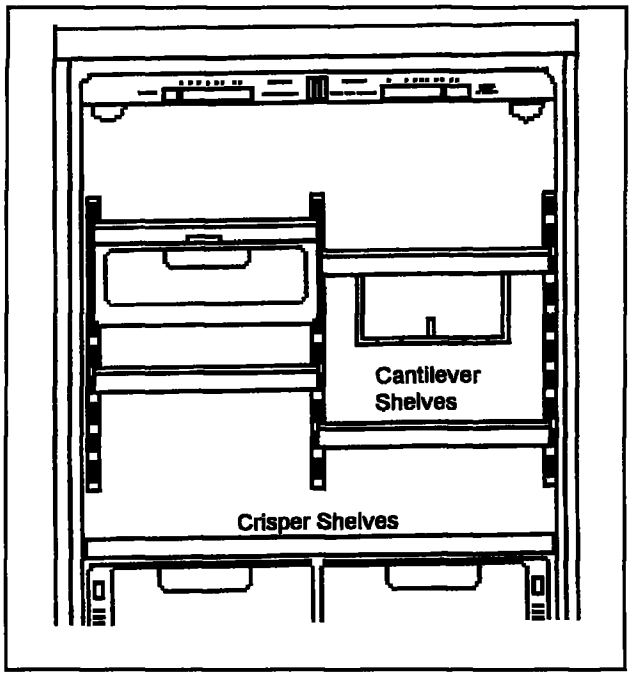

© 1997 Maytag Corporation

ADJUSTABLE CANTILEVER SHELVES:

Type # 1 - *(Two support hook frame design.)*

Glass or wire cantilever shelves may be available with your refrigerator. To remove a shelf, tilt front up and lift the rear straight up a fraction of an inch and pull straight out. To lock the shelf into another position, tilt the shelf with the front up. Insert hooks into desired shelf openings and let the shelf settle into place. Make sure the shelf is securely locked into position before loading it with food.

Type # 2 - *(Three support hook frame design.)*

To remove the shelf grasp the shelf at the front with one hand and push up under the shelf back with the other hand. Pull the shelf straight out. To lock shelf into another position keep the shelf horizontal, guiding the support hooks into the slots in the shelf support at the rear of the cabinet. Lower the shelf until the hooks lock into position. Make sure the shelf is securely locked into position before loading it with food.

CANTILEVER SHELF TRIM

The cantilever shelf trims are easily removed by placing the shelf on a flat work surface. Raise the front of the shelf, grasp the right underside of the front trim, and pull toward you. Next remove the glass from the rear trim, then remove the trim.

Install the new rear trim on the glass. Then place the shelf in a vertical position (shelf front up) install the glass and rear trim by applying a downward force on the rear metal shelf cross brace until it snaps securely in place. Next install the front trim on the glass and the front metal shelf cross brace.

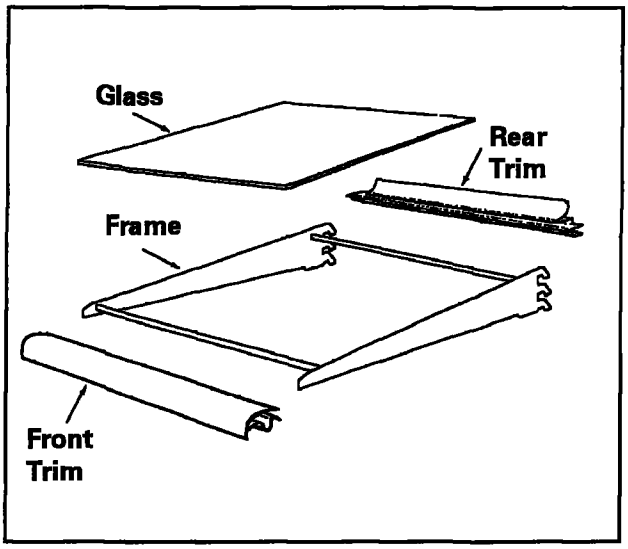

CRISPER SHELVES

1. Remove cantilever shelves if needed to allow removal of crisper.
2. Remove crisper drawers by pulling out to the stop. Lift and pull again.
3. Carefully remove glass. The glass just lays on the shelf.
4. Lift crisper shelf and pull forward. Tilt to one side to remove from the refrigerator.
5. Reverse procedure to reinstall.

MEAT PAN SHELF ASSEMBLIES

Replacing meat pan shelf components (Type #1) (MAYTAG and JENN-AIR)

To disassemble the shelf assembly:

1. Pull the meat pan out until it stops, lift slightly and at the same time, pull the pan completely out.
2. Lift and remove the shelf assembly out of the refrigerator.

© 1997 Maytag Corporation

3. Turn shelf assembly upside down.

4. Remove slide control by flexing the rear snap and lifting the control out of the front trim. For spill proof shelves, remove the screw that is holding the control then lift it out of the shelf.

5. Disconnect the slide control from the ribbon.

6. Remove the rear scoop by flexing it until one end comes out of the shelf arm. Disconnect from the ribbon and remove both the scoop and the ribbon from the shelf.

7. To remove glide rails from the shelf, use a screwdriver to press in front snap until the rail can be slid toward the rear of the shelf. The rail can be easily removed from the shelf.

8. Rollers (if applicable) can be easily removed from the glide rails by loosening a screw.

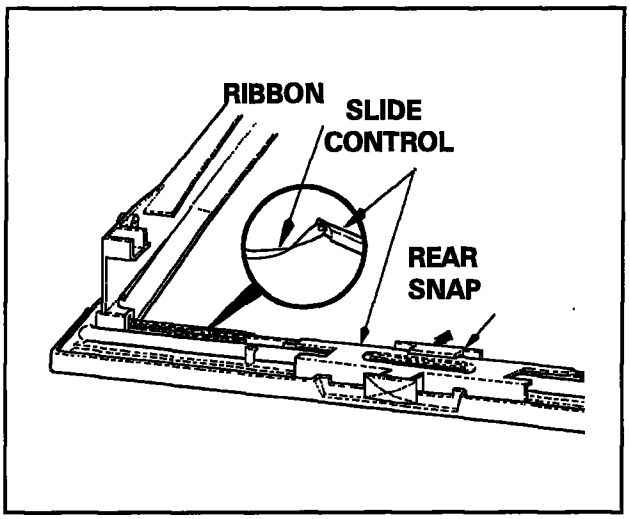

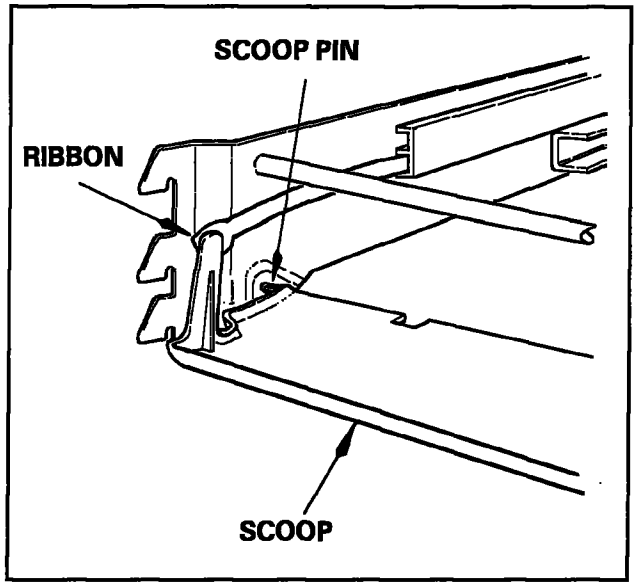

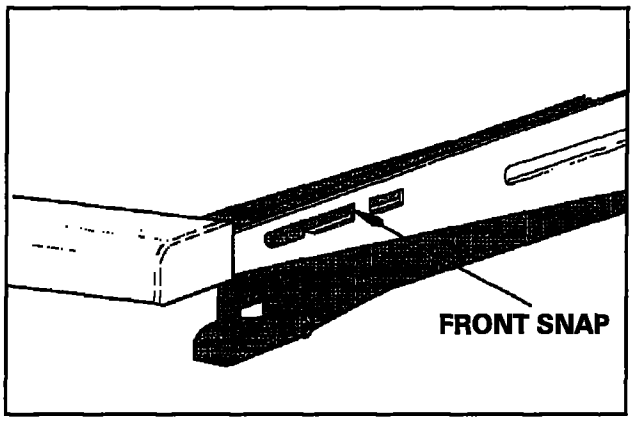

Replacing meat pan shelf components (Type #2)

To disassemble the shelf assembly.

1. Pull the meat pan out until it stops, lift slightly and at the same time pull the pan completely out.

2. Lift and remove the shelf assembly.

3. Put the slide control in its lowest position. Unhook the scoop from the slide control.

4. Flex the scoop until one end comes out of the shelf arm then completely remove it.

© 1997 Maytag Corporation

5. Remove the bezel and slide control by flexing the tab which is sticking through the shelf side arm. The control can then be slightly rotated and removed from the shelf.

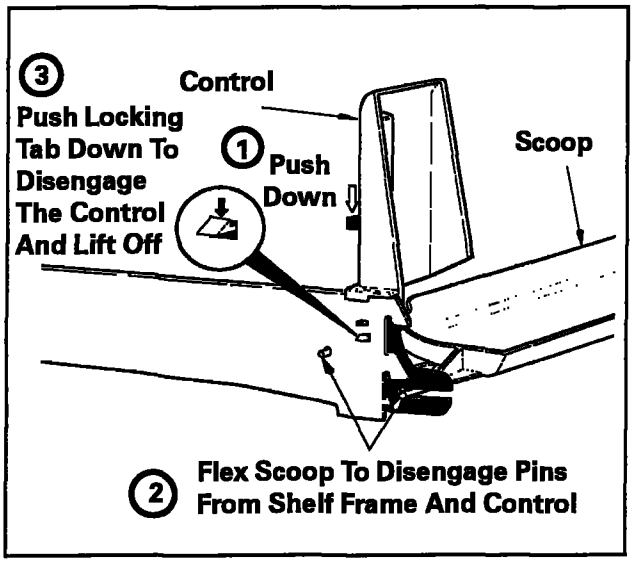

FREEZER COLD CONTROL

There are two Manual Freezer Controls as follows:

Freezer Air Tower Assembly (Type #1)

The freezer cold control is in the freezer air tower assembly located in the freezer compartment. The freezer control adjusts a baffle which regulates the amount of chilled air that is allowed to both compartments. Following is a description of how it works:

By turning the freezer control knob toward a higher number you reduce the flow of chilled air into the fresh food compartment and increase the flow to the freezer compartment; therefore, lowering the temperature of the freezer compartment. By turning toward a lower number, you increase the flow of chilled air into the fresh food compartment and decrease the flow to the freezer compartment.

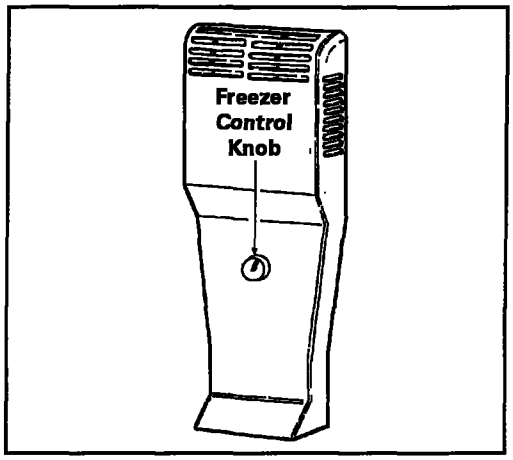

Type #1
Freezer Tower Assembly

REPLACING THE FREEZER AIR TOWER ASSEMBLY

1. **Disconnect the unit from the power source.**
2. Remove the ice maker if equipped.
3. Remove the evaporator cover mounting screws.
4. Tilt the top of the evaporator cover forward, disconnect the wire harness connector.
5. Separate the freezer air tower from the cover by releasing the locking tabs.
6. Assemble the new parts in the freezer by following the reverse order of removal.

Manual Freezer Damper Control Models (Type # 2)

The freezer cold control is located in the temperature control housing of the fresh food compartment. The control knob is connected to a damper by a actuator arm and actuation tape.

© 1997 Maytag Corporation

By turning the freezer control knob toward a higher number you can reduce the flow of chilled air into the fresh food compartment; therefore, lowering the temperature of the freezer compartment. By turning toward a lower number, you increase the flow of chilled air into the fresh food compartment and decrease the flow to the freezer compartment.

Replacing The Manual Freezer Damper Control:

1. Disconnect the unit from the power source.
2. Open the fresh food door, then remove any food products on the top shelf.
3. Remove the front mounting screw in the temperature control housing.
4. While holding the front of the temperature control housing, remove the rear mounting screw, and lower control housing.
5. Disconnect the temperature control housing electrical quick disconnect.
6. Remove the temperature control housing from the refrigerator and place on a flat work surface.
7. Lift the damper control up just enough so that you can turn the damper arm to separate from the actuation tape.
8. Replace the damper control.
9. Assemble the parts by following the reverse order of removal.

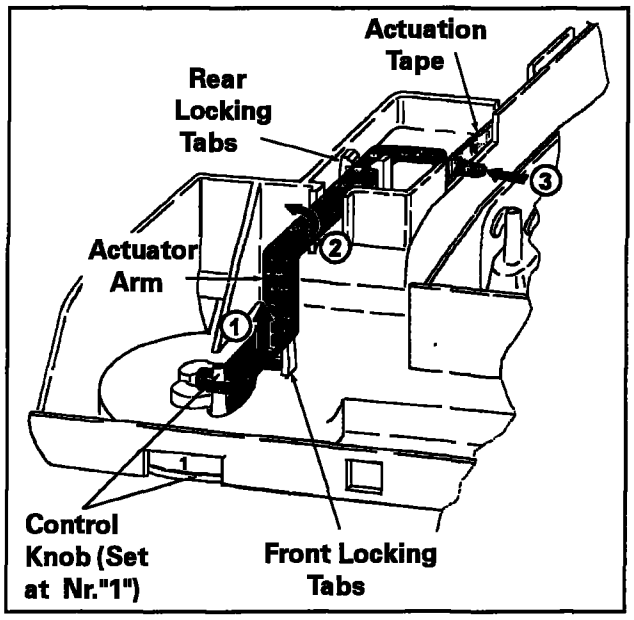

TYPE 2
Manual Damper Control
Actuator Arm And Tape

Replacing The Freezer Control Actuator Arm And Tape:

- ***Do Steps 1-6, Replacing the Manual Damper Control***

1. Lift up the actuator arm to disengage it from the control knob and front locking tabs.
2. Rotate Actuator arm counterclockwise and lift it out to clear the rear locking tabs.
3. Remove the actuator arm from the actuation tape.
4. Install the replacement parts in the reverse order.

MOUNTING HARDWARE

Nylon Snap Nuts

Snap nuts are in places where a screw must mount in the liner.

© 1997 Maytag Corporation

To remove a snap nut, pry it loose with a small screwdriver or putty knife.

Install a snap nut by pressing the nut into the opening until it snaps into place.

DEFROST WATER DRAIN SYSTEM

Defrost water collects in the evaporator drip tray and drains into a trough in the fresh food control housing. Next the water passes through a restricted opening and into a 90° elbow which joins to the drain tube. (The restricted opening prevents foreign objects from blocking the drain system.) The drain tube is located in the insulation cavity and drains the water into a pan located under the cabinet.

NOTE: ***A trap is incorporated with the drain tube to prevent warm air from entering into the refrigerator.***

CABINET DOORS AND ASSOCIATED PARTS

Paint Touch-Up

Painted areas of the cabinet or doors that become scratched or marred can be touched up with enamel. When manufactured, a high solids polyester is used.

⚠ WARNING

Never use lacquer any place on the cabinet where it could come into contact with the door seal. Lacquer will deteriorate the vinyl material in the seal.

INNER DOOR LINER

Removing And Replacing The Inner Door Liner:

The polystyrene inner door liner and the door seal are mounted to the outer panel by screws placed around the door flange. The inner door liner can be replaced without removing the door from the cabinet. If it is necessary to remove the door liner, proceed as follows:

1. Turn the control to the "***Off***" position.
2. Open the freezer door and remove the screws and metal strip (if used) from around the door flange.
3. Remove the door liner and transfer the seal to the replacement liner. Make sure the lip of the seal will be sandwiched between the inner and outer door panel.
4. Position the replacement door liner and loosely install all the screws around the door flange.
5. Open and close the door several timers and check the seal for proper alignment.
6. Carefully open the door by pulling on the middle of the door panel.

NOTE: ***Do not pull the door by the handle or the panel will shift out of alignment.***

7. Tighten all corner screws snug tight.
8. Open and close the door several times. Recheck the door seal for proper alignment. If it is good, tighten the rest of the screws.

© 1997 Maytag Corporation

Tighten the screws until they are just snug, then turn them clockwise an other one-half turn.

NOTE: ***Do not attempt to twist the door panel after all the screws have been tightened.***

9. Transfer the shelves and the trim to replacement liner.

OUTER DOOR PANEL

Removing And Replacing The Outer Door Panel:

Upper

NOTE: ***Remove all food from the freezer door***

1. Turn the control to the "***Off***" position.
2. Remove door handle and trim.
3. Use a soft lead pencil to trace around the upper hinge. (This will aid in replacing the hinge.)
4. Remove the upper hinge and place it on top of the unit with newspaper or cloth underneath to prevent scratching. The door will remain held in place by the magnetic gasket. Do not misplace the spacers.
5. Transfer the handle, trim, plug button, bushings, gaskets and liner to replacement panel.
6. Install the top hinge using the tracing to help align the hinge.

Lower Door

NOTE: ***Remove all food from the fresh food door.***

1. Remove upper door.
2. Remove the inboard center hinge screw and carefully open the door pulling it over far enough so the center hinge clears the outside shoulder screw. Lift the door up and off the lower hinge pin.
3. Place the door on a padded work surface.
4. Transfer the handle, trim, plug button, bushings, door seal, (metal retaining strips if used) and liner to the replacement panel. Do not tighten the liner mounting screws.
5. Position door onto bottom hinge, mount the door on the center hinge. Close the door.
6. Install the upper door and hinge.
7. Open and close the doors and tighten the liner mounting screws.

REVERSING DOORS

The following instructions are for changing doors that are hinged on the right to hinging on the left.

NOTE: Do not over tighten the screws.

1. Turn the cold control to "Off" and remove all food items in the doors.
2. Remove the upper door top hinge. Place the hinge and spacers where they will not be lost.

© 1997 Maytag Corporation

3. Carefully open the upper door and lift it up and off the center hinge. Place the door on a padded work surface.

4. Remove the center hinge, shims and washers. Place hinge, ships and washers where they will not be lost.

5. Carefully open the lower door and lift it up and off the lower the lower hinge pin. Place the door on a padded work surface.

6. Remove the lower hinge.

7. Transfer the upper, lower, and center hinge plug buttons from the left to the right side mounting holes.

8. Mount the lower hinge and shims to the left side of the cabinet.

9. Transfer the lower hinge pin and washers from the inside to the outside hinge pin mounting hole.

10. Reverse door handles, stops plug buttons for the type of model you are working on.

11. Set the lower door on the bottom hinge pin and close the door. With the door in the closed position, line up the center hinge and shims with the hinge mounting holes. Install the hinge. ***(The center hinge mounting bracket has to be turned 180° to mount on the left side.)***

12. Position the upper door on the center hinge pin and close the door. Line the upper hinge with the hinge mounting holes. Install the hinge.

CABINET WHEELS

The cabinet has non-adjustable rear wheels.

The rear wheels are securely fastened in place by an axle held in place by a retaining tab in the rear compressor mounting rail.

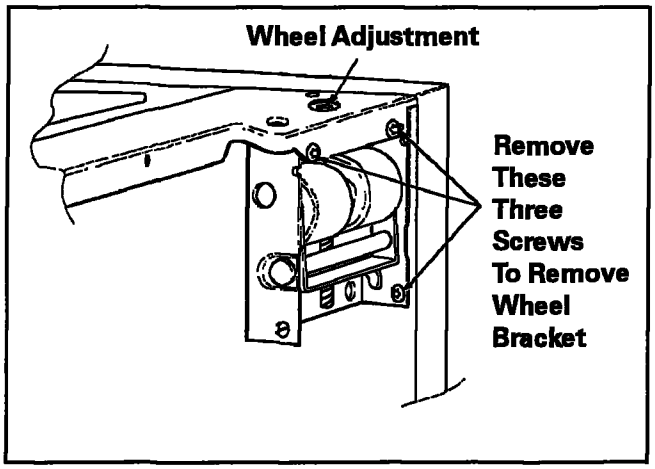

Front Wheel Assembly Arrow Pointing Out Mounting And Adjustment Screws

FRONT WHEEL ASSEMBLY

The front wheel assembly is securely fastened by screws to the face plate and the leg of the cabinet.

Models covered in this manual have adjustable front wheels. However, there are some that do not have adjustments. To lock the cabinet in place lower the front leveling legs.

CABINET LEVELING

To enhance its appearance and maintain efficient performance, the refrigerator should be level. The front wheels were adjusted at the factory so the doors were properly aligned and the cabinet level. However, jarring in transit, or standing the refrigerator on uneven floors may cause

© 1997 Maytag Corporation

the doors to shift out of alignment. If front alignment is necessary adjust the wheel with a hex head driver. Clockwise raise the cabinet counter clockwise lowers the cabinet. If front wheels are not adjustable use leveling legs to level.

DOOR SEAL

The drawing shows a view of the magnetic door seal used on all models mentioned in this manual. The magnetic strips are attracted to the metal cabinet front, providing an excellent seal around the entire door. A visual inspection of the door seal while opening and closing will reveal any areas of poor seal. You should be able to notice a slight expansion and compression of the seal bellows as the door is opened and closed.

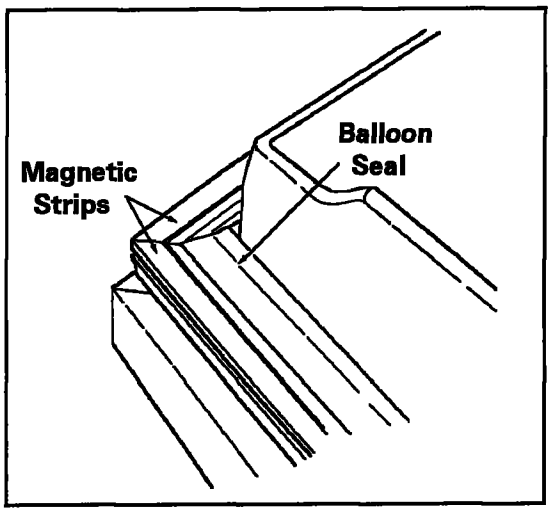

Door Seal And Magnetic Strips

Toe-In & Toe-Out Adjustments:

In order for the seal to seal evenly around the entire door, it must make contact at the top and bottom at the same time. For this reason the door, when ajar should not *toe-in* or *toe-out*.

To correct a *toe-in* or *toe-out* condition, make sure the hinge-side of the door is parallel with the cabinet. Then proceed as follows:

1. Check the cabinet levelers and adjustable wheels. Raising the handle side may correct a *toe-out*; lowering may correct a *toe-in*.

2. Loosen all inner panel mounting screws along the top, bottom and handle side of the door. ***Do not loosen the screws along the hinge side.***

3. Hold the corner that *toes-in* stationary, and push in on the *toe-out* corner until the door is lined up parallel with the cabinet. Tighten a few screws on the handle side to hold the door in this position.

4. Open and close the door several times to ensure a proper fit. If necessary, repeat ***Steps 2 and 3.***

5. Tighten all loosened screws until they are snug.

Hinge Adjustments:

Hinge adjustments are necessary when:

1. The seal is not sealed sufficiently along the hinge side of the door.

2. The seal is compressed more than 1/16" on the hinge side (causing a poor seal elsewhere around the door).

3. The distance between the door and cabinet is greater at the top than it is at the bottom, or vice versa.

4. The handle side of the door does not line up with the cabinet side (viewed

© 1997 Maytag Corporation

from the front), or when the door panel top is not parallel with the cabinet top.

5. If one or more of these conditions exist, adjust one or both hinges to correct the trouble. Raising the hinge side may correct a door sag.

Door Alignment:

The cabinet door on each model covered in this manual is in correct alignment when:

1. The hinge side of the door is an equal distance from the cabinet flange at the top and bottom.

2. The gasket seals smoothly and is compressed no more than 1/16" along the hinge side with the door closed.

3. The handle side of the door lines up with the handle side of the cabinet (viewed from the front). The door panel is parallel with the cabinet top.

In many cases, leveling the refrigerator will eliminate the need for cabinet door adjustments. Make sure the refrigerator is plumb by checking all edges as well as both sides of the cabinet with a carpenter's level.

Door Switch

Disconnect the unit from the power source.

The door switches can be easily removed by using a flat blade screw driver or putty knife. Pry from the liner and disconnect wires.

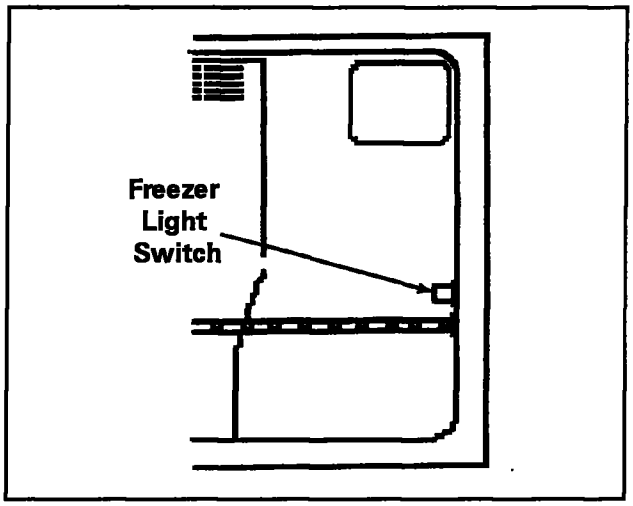

Freezer Door Switch

© 1997 Maytag Corporation

SECTION 4. SERVICING OF AUTOMATIC ICE MAKERS IN TOP MOUNT REFRIGERATORS

SERVICING

The design of this ice maker allows all of the components to be tested without removing the ice maker or moving the refrigerator away from the wall to access the water valve.

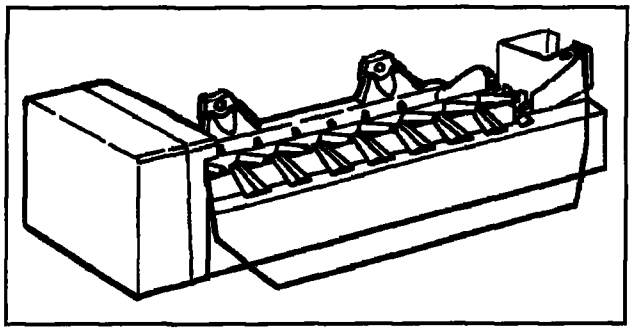

Remove the cover and you will see the test points identified on this module.

N	Neutral side of line
M	Motor connection
H	Heater connector
T	Thermostat connection
L	L1 side of line
V	Water valve connection

NOTE: ***Read this section completely before doing any testing or adjusting. Refer to the tech sheet for complete testing information.***

The test holes are identified as "N", "M", and "V", etc.

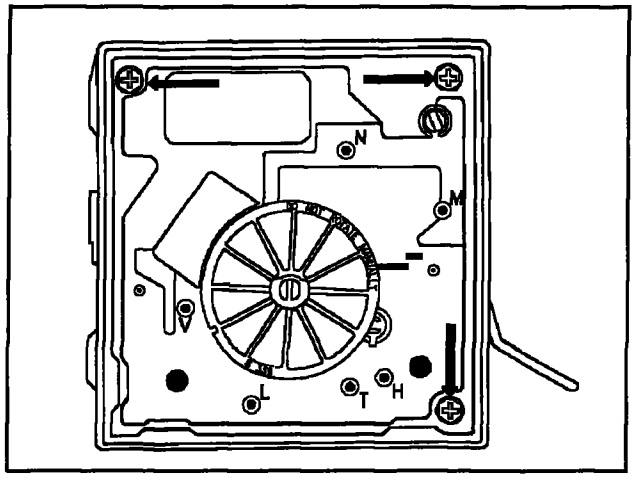

Test Procedures

Ice maker plugged into power / Shut-off arm down / Freezer cold:

- Test points L & N will verify 120 volts to ice maker module.

  (Make sure your test probes go into the test points 1/2".)

- Test points T & H will verify if the bi-metal thermostat is open or closed.

  Short T & H with an insulated piece of wire (14 gauge) to run the motor. If the motor doesn't run, replace the module assembly. If the motor runs, replace the bimetal thermostat.

- If you leave the jumper in for half of a revolution, you can feel the heater in the mold heat up, if it is good.

  Remove the jumper, and the water valve will be energized in the last half of the revolution.

© 1997 Maytag Corporation

(Make sure that the freezer temperature is cold enough to close the bimetal.)

NOTE: ***Do not short any contacts other than those specified. Damage to the ice maker can result.***

Ice Maker Unplugged:

- Test points L & H will check the resistance of the heater (72 ohms). Replace the mold and heater assembly if not near this value (+/- 10 ohms).

  (Ejector blades should be at the end of the cycle position.)

Service Procedures

Cover: Pull water adjustment knob first and snap off cover. Index knob and reinstall in same position for same water fill. (Some units may not have index knobs.)

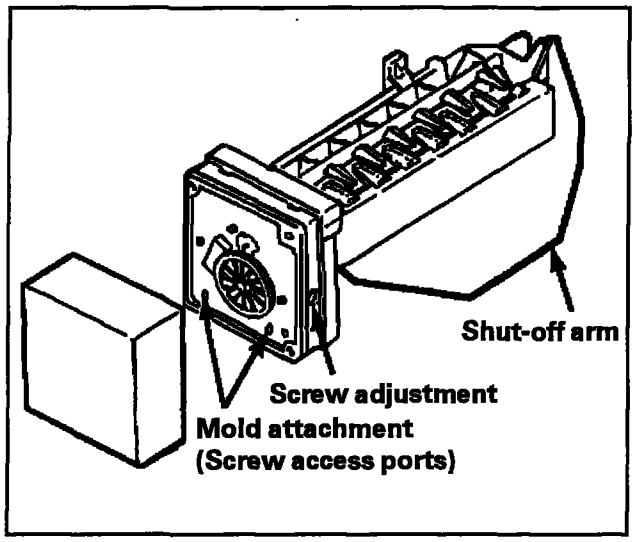

Module, Motor, and Support Assembly: Insert Phillips screwdriver in access ports in module. Loosen both screws. Disconnect shut-off arm. Pull mold from support assembly. To remove module only, remove 3 Phillips screws and pull module out of housing.

Shut-Off Arm: Pull out from white bushing. Reinsert to full depth. See page 5-15 for detailed position.

Mold & Heater: Remove module and support assembly. Install on new mold and heater assembly.

Bimetal: Remove module and support assembly. Pull out retaining ring clips with bimetal.

Fill Cup: Remove module and support assembly. Remove ejector blades and shut-off arm. Pull fill cup up from mold.

Ejector Blades or Stripper: Remove module and support assembly. When reinstalling ejector blades, realign "D" coupling with module cam.

Accessing The Control Box

To remove motor and contact assembly from control box, take out three screws (arrows) and pull free after disconnecting the shut-off arm.

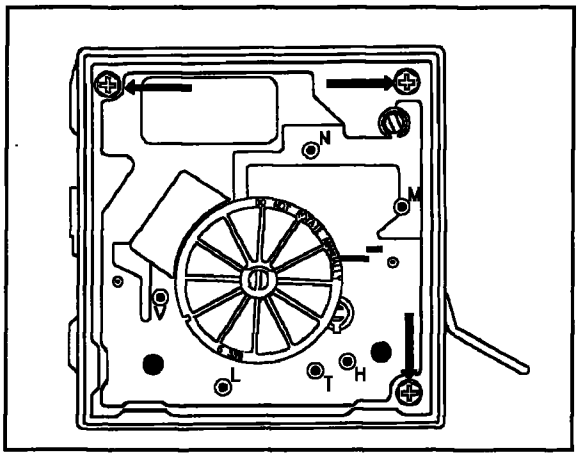

© 1997 Maytag Corporation

⚠ CAUTION

Never rotate the blade or the drive gear... It will ruin the main assembly.

There are several switches which will jam if manually turned counterclockwise. And the gears will be destroyed if turned clockwise. If you need to advance the ice maker into the cycle, use a jumper to bridge **"H"** to **"T"**. And unless the motor is defective, it will run. (The shut-off arm must be in the **"ON"** position.)

NOTE: ***There are several slotted shafts on the motor assembly board. Do not under any circumstances insert a screwdriver and attempt to turn these shafts. These slots are to permit assembly only.***

NOTE: ***There are no repairable or replaceable components in the module. Unless your are replacing the module, there should be no need to remove it when diagnosing or repairing the ice maker.***

MODULE COMPONENTS

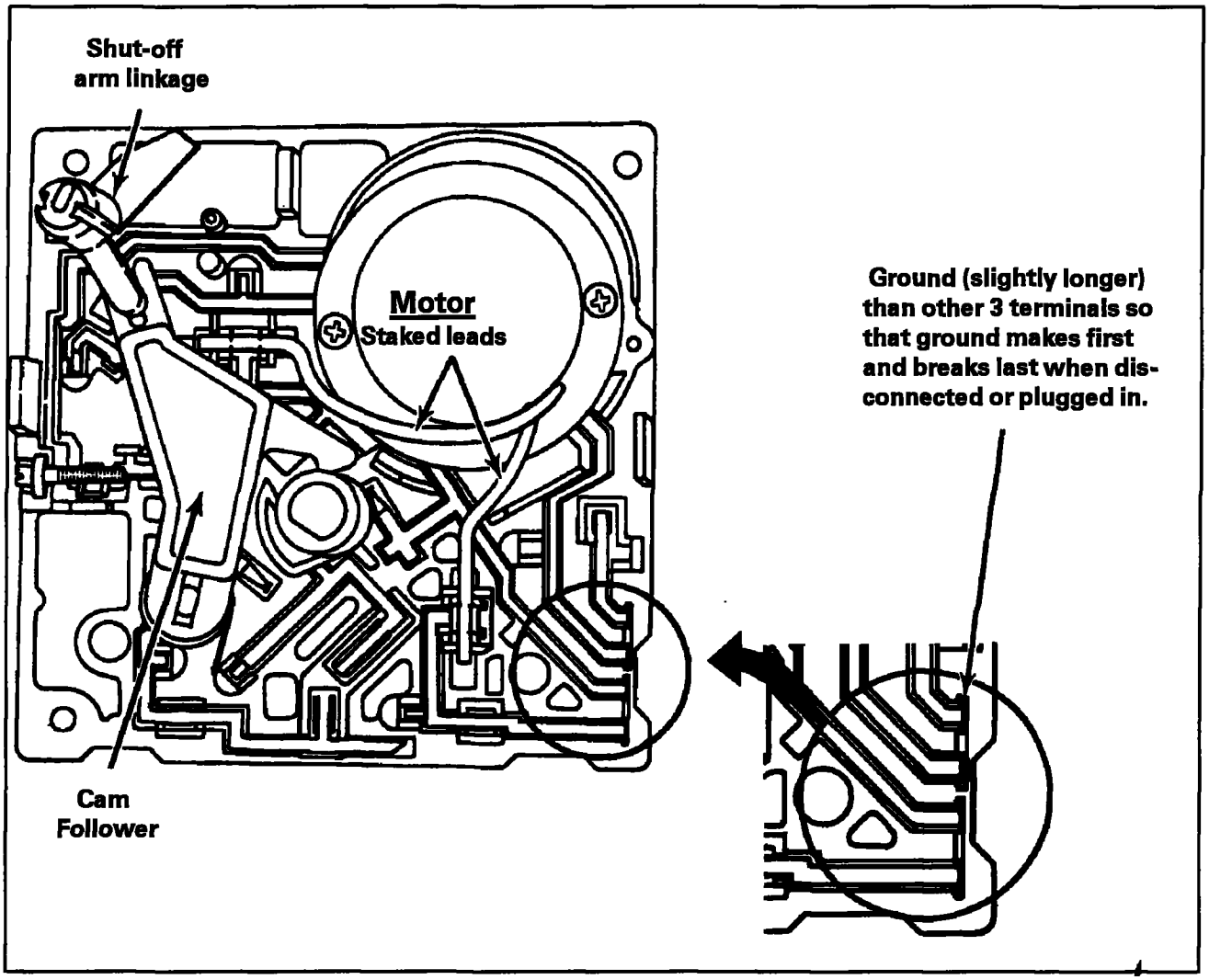

© 1997 Maytag Corporation

Water Fill Adjustment

Turning the water level adjustment screw will move the contact in its relationship with the contact ring segment. This causes the contact to vary the time that the water valve is energized since the contact ring is tapered at the end of the fill time.

- 360° will affect fill by 40cc - 180° varies the fill by 20cc.
- Future adjustment could damage module.
- If water valve adjustment screw falls out, just put it back in and align the hole in the hole as shown.

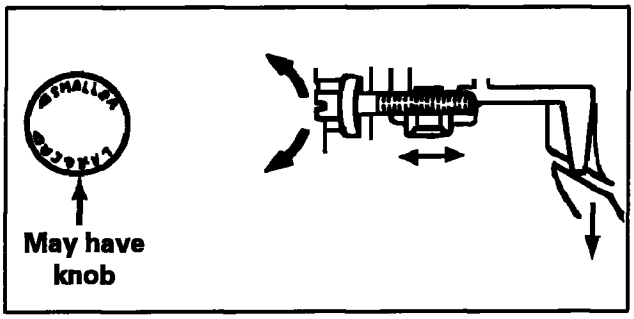

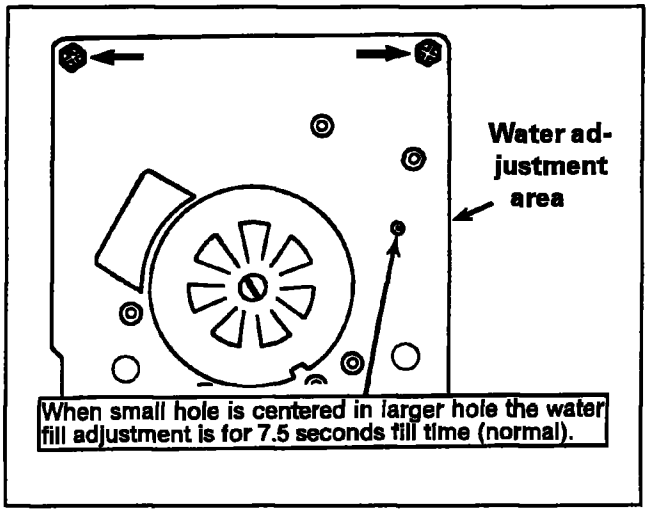

- Turning the knob or screw clockwise decreases fill - counterclockwise increases the fill amount.
- Only one revolution is possible with the cover on, due to a stop molded on cover.

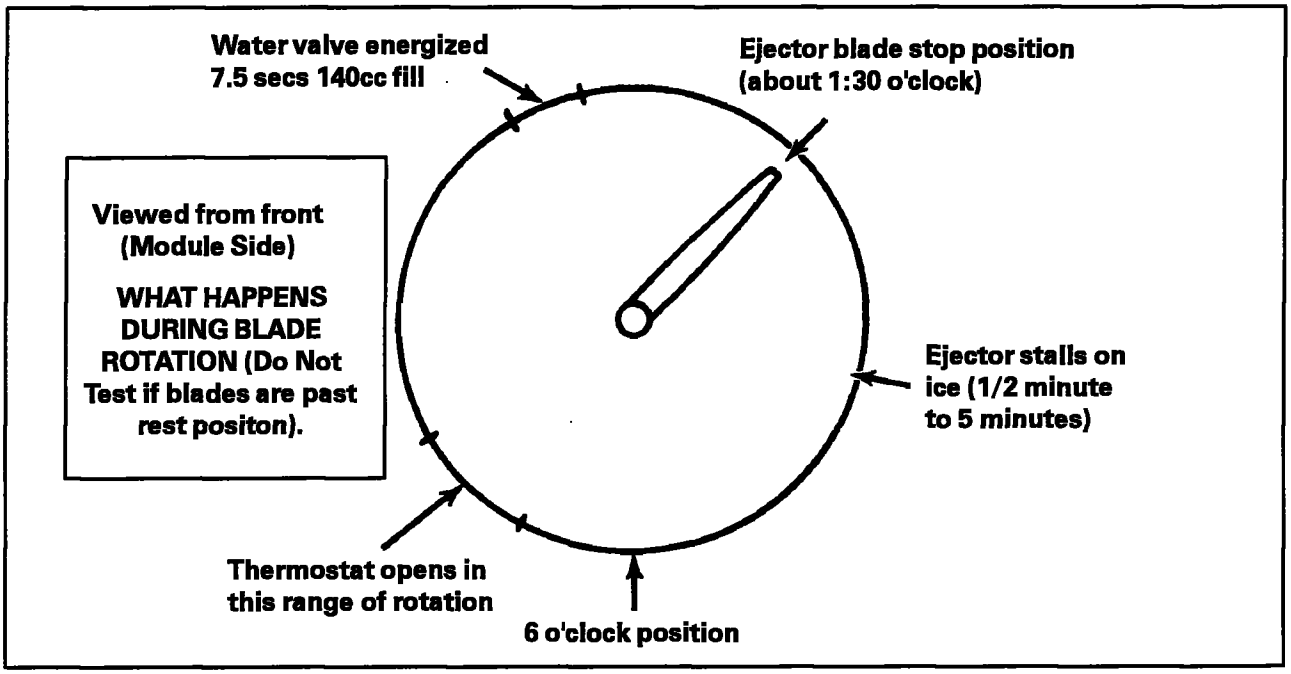

NOTE: ***Some ice makers will have a water adjustment knob. Pull off the knob to remove the cover. Be sure to replace the knob in the same setting position.***

© 1997 Maytag Corporation

Water Problems

Water quality can cause ice makers to fail or produce unacceptable cubes. If mineral content or sand is a problem, the screen in the fill valve can restrict. A particle of sand can keep the valve from seating properly. Results will be small crescents (or no ice) or flooding of the ice container if the water valve does not close.

Mineral content can also lime up the mold causing wicking of water over the mold and poor cube release. Silicone is applied at the upper edges, around the fill cup and stripper.

Temperature Problems

Temperatures in the freezer section which average above the normal 0° + / - 5° will slow the production of ice. Complaints of inadequate crescent production may be corrected by simply setting the freezer to a colder temperature in this 1-revolution ice maker is 17° + / - 3. Obviously, the ice will be well frozen when these temperatures are achieved, but cycling time will be slowed if the freezer temperature is not cold enough to achieve these mold temperatures easily.

NOTE: ***Only the thermostat, mold, with heater and wiring harness are replaceable. Any other failure (including the motor) requires replacement of the module assembly. If you are replacing the mold assembly, it comes with a new mold heater installed. External plastic parts are also replaceable.***

A failed mold heater requires complete replacement of the mold and mold heater assembly.

Thermostat

If the thermostat is diagnosed as defective, it can be removed and replaced easily. Remove the control box from the mold by taking out two Phillips screws.

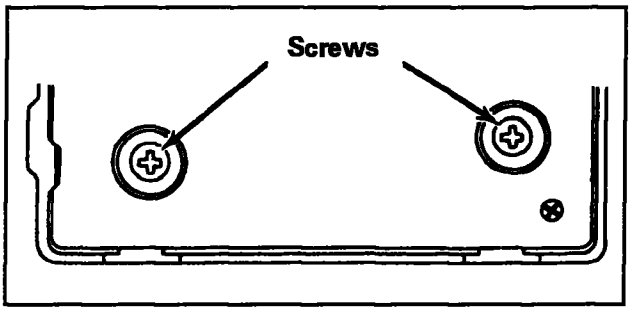

Pull
(Front of Black Housing)

Pull the housing free of the mold and you will see the thermostat on the mold side.

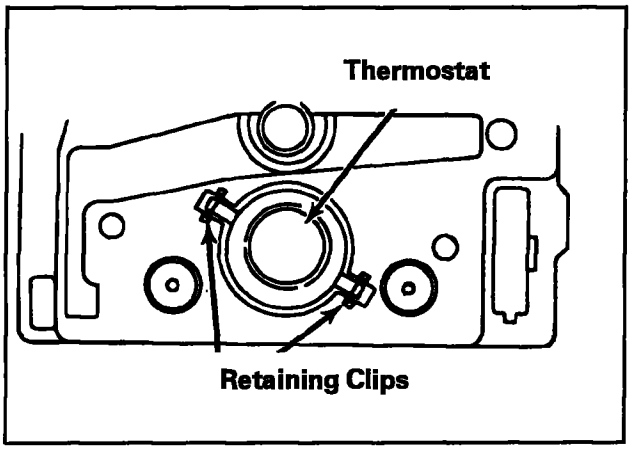

Using needle nose pliers, grasp one of the thermostat clips and pull out. Press in new thermostat, making sure that pins are properly indexed. Using this procedure, it is not necessary to remove the electrical assembly. If you are replacing the module, transfer the clips to the new mold support. (Use new thermal bonding material.)

© 1997 Maytag Corporation

Shut-Off Arm

(Short Arm - Regular I / M)

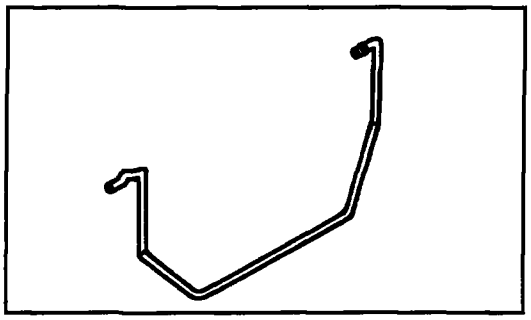

Installation Procedure (same for both arms):

1. Start with arm in "down" position.
2. Follow steps 1, 2, and 3.

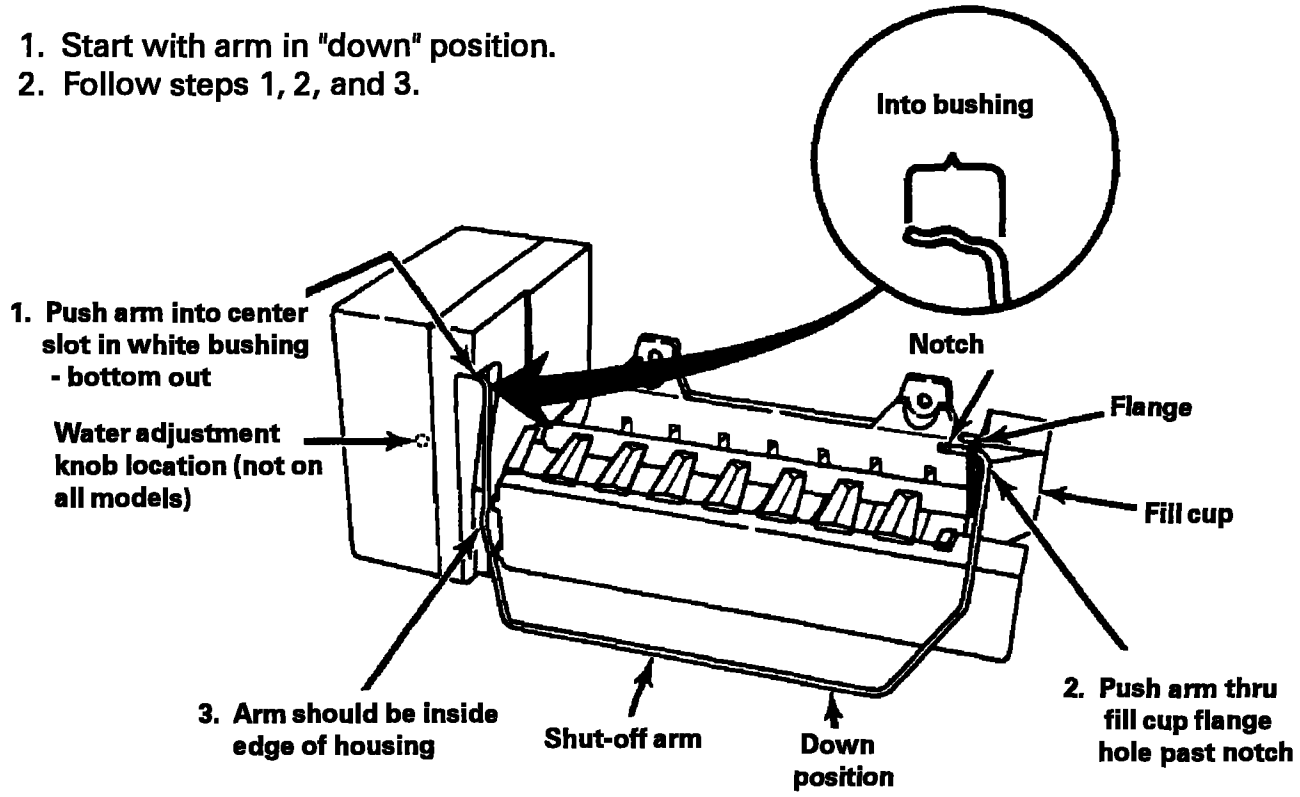

Harness

To remove the wiring harness, depress the retaining tab and pull the plug free.

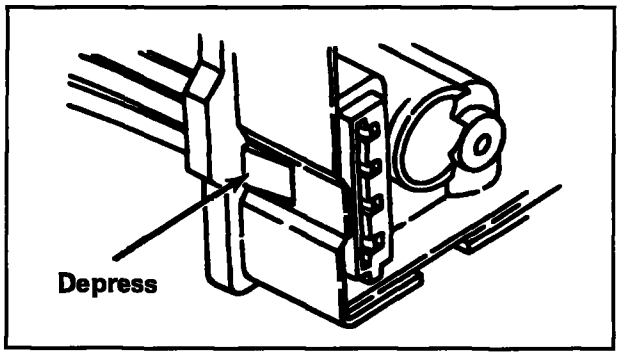

© 1997 Maytag Corporation

Leveling of Ice Maker

(Assure uniform ice crescents)

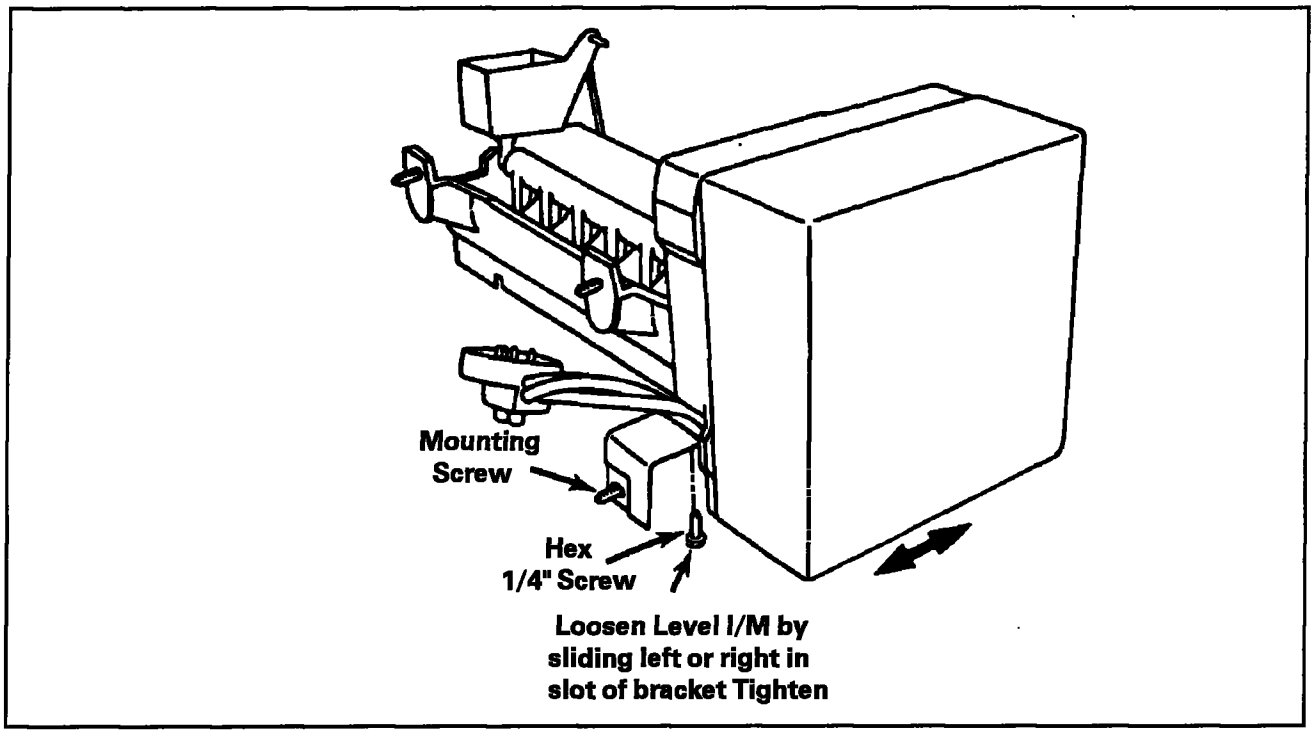

Make sure the refrigerator is level front to back (adjust legs or rollers).

Removing And Replacing Fill Cup

To remove fill cup, you must separate mold and blade from module housing. Remove blade from fill cup.

The appropriate break-out plug needs to be removed from the fill cup for your special model. Check old ice maker.

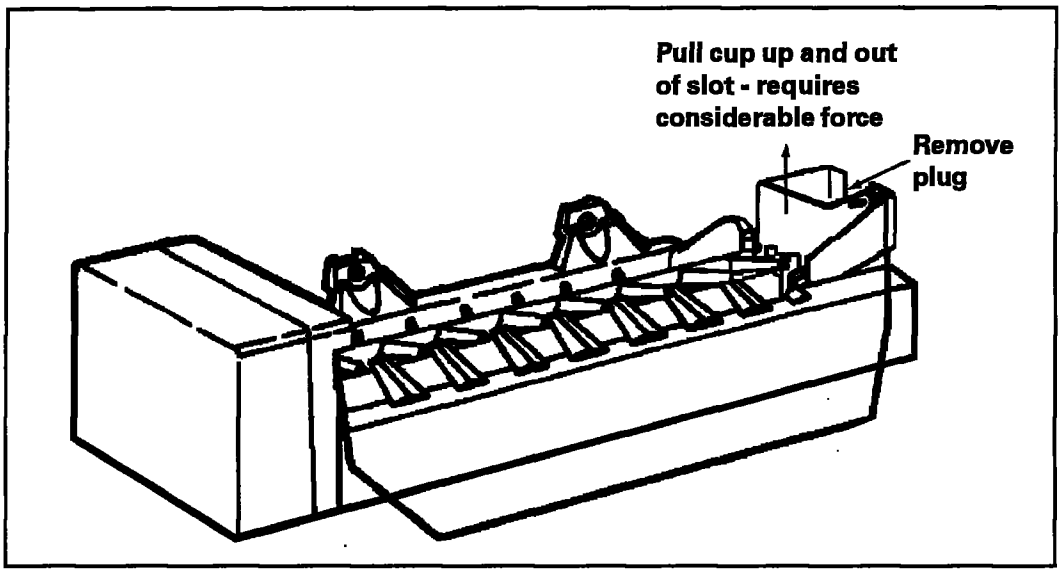

© 1997 Maytag Corporation

OTHER INFORMATION

- Motor connectors can be damaged if leads are removed.
- The motor is available only as part of the complete module assembly.
- One revolution of blade takes three minutes (plus stall time on ice).
- Bench test cord can be made from cabinet socket.
- Tan and black wires on socket plug are water valve leads.

SPECIFICATIONS	
Mold Heater	**185 watts, 72 ohms**
Thermostat (Bimetal)	**Close 17° (+ / -) 3° Open 32° (+ / -) 3°**
Water Fill	**140cc, 7.5 seconds**
Motor	**1.5 watts, 8,450 ohms**
Module	**Stamped circuit, Plug-in connectors**
Cycle	**One revolution (ejects and water fill)**

© 1997 Maytag Corporation

SECTION 5. TROUBLESHOOTING

DISCONNECT THE UNIT FROM THE POWER SOURCE

CONDITION	POSSIBLE CAUSE	CORRECTION
Unit does not run. No light in refrigerator.	• No power at AC distribution panel of house. • AC outlet. --Defective outlet. --Open circuit to AC outlet. • Defective service cord plug. • Open service cord or open machine compartment wiring harness. • Two simultaneous problems-light bulb out and open AC circuit to compressor.	• Check and advise customer to call an electrician. • Advise customer: --to have defective outlet replaced. --Replace fuse. If problem not corrected, advise customer to call electrician. • Replace. • Repair or replace if necessary. Refer to wiring diagrams and check circuit. • Replace light bulb. Refer to wiring diagrams and check circuit.
Unit does not run, light in refrigerator works.	• Temperature control. --Defective or adjusted incorrectly. --AC circuit open to control. • Defrost timer. --Defective (contacts completing compressor circuit are open). --AC circuits open to timer (motor winding or contacts). --May be defrosting. • Overload protector. --AC circuit open to overload. --Defective overload. • Starting relay. --AC circuit open to coil (overload does not click). --Defective relay. • Compressor motor. --AC circuit open to compressor. --Defective compressor (overload may or may not click depending upon what is wrong with compressor). • Low line voltage (overload will click on and off as unit tries to start).	• See below: --Replace or adjust if necessary. --Refer to wiring diagrams and check circuit. • See below: --Replace. --Refer to wiring diagrams and check circuit. --Repair or replace. • See below: --Refer to wiring diagrams and check circuit. --Replace. • See below: --Refer to wiring diagrams an check circuit. --Replace. • Check voltage. Must be at least 100V with all other load on the line.

© 1997 Maytag Corporation

DISCONNECT THE UNIT FROM THE POWER SOURCE

CONDITION	POSSIBLE CAUSE	CORRECTION
	• Complete or possible partial restriction under high ambient (cycles on overload protector after unit stops and tries to restart).	• See "Checking Operating Pressure".
Unit run excessively or continuously.	• Check to ensure light does not stay on continuously.	• Check light switch and replace if needed. Check door adjustment.
	• Dirty or restricted condenser, due to particularly greasy, dusty, or significant pet traffic in the home	• Advise customer that it may require cleaning periodically in this environment.
	• Defective cold control.	• Repair or replace.
	• Condenser fan not running.	• Repair or replace.
Unit does not run for period of time after defrost.	• Defrost timer is defective (does not advance - advance to cool cycle).	--Replace.
Unit runs continuously but there is no cooling in refrigerator and freezer compartments.	• Substantial loss of sealed system charge (low wattage readings).	• Locate and repair leak before recharging.
	• Restricted capillary or drier on high side (low wattage readings while running). Will cycle on overload when unit tries to start after defrost cycle, or after having been shut-off and restriction is still present.	• Replace defective part or parts.
	• Defective compressor.	• Repair or replace.
Unit runs continuously. The refrigerator and freezer compartment are both too cold (normal wattage reading).	• Temperature control is defective (short contacts or not adjusted).	• Replace or adjust as required.
	• Freezer control not adjusted properly.	• See "Freezer Cold Control" for proper adjustment.
Unit runs continuously. The refrigerator compartment not cold enough, but freezer compartment is colder than normal.	• Air duct from freezer to refrigerator is blocked (normal wattage reading).	• Remove what is blocking the air duct. See "Air Flow Diagram".
Unit runs excessively or continuously. The refrigerator and freezer compartments are cooling, but are not cold enough.	• Freezer fan.	• See below:
	--Defective fan motor.	--Replace.

© 1997 Maytag Corporation

DISCONNECT THE UNIT FROM THE POWER SOURCE

CONDITION	POSSIBLE CAUSE	CORRECTION
	--AC circuit to fan open (lower wattage readings).	--Refer to wiring diagrms and check circuit.
	• Not defrosting (lower wattage readings than normal and frost buildup or evaporator).	• See below:
	--Defective defrost timer, defrost heater or defrost terminal thermostat.	--Replace defective part or parts.
	--AC circuit to defrost system open.	--Refer to wiring diagrams and check circuit.
	• Temperature control.	• See below:
	• High setting of temperature control may result in these conditions under very severe environmental and usage conditions (high humidity and large number of freezer and refrigerator door openings).	• Check and adjust for proper setting.
	• Sealed system.	• See below:
	--Overcharge (high wattage readings).	--Evacuate and recharge with proper amount of refrigerant.
	--Undercharged (low wattage readings).	--Check and see "Checking Operating Pressure".
	--Partial restriction.	--Check and see "Checking Operating Pressure".
	• Compressor motor defective. Inefficient compressor (low wattage readings).	• Replace.
	• Condenser fan.	• See below:
	--AC circuit to fan open (high wattage reading).	--Refer to wiring diagrams and check circuit.
	--Defective fan (high wattage reading).	--Replace.
	• Dirty or restricted condenser due to particularly greasy, dusty or significant pet traffic in the home.	• Advise customer that it may require cleaning periodically in this environment.
	• Too much warm food placed in refrigerator at one time.	• Advise customer.
	• Air (no leak) in sealed system.	• Replace drier and evacuate system thoroughly, recharge with proper amount of refrigerant.
Unit runs excessively. Refrigerator compartments eventually gets cold enough, but freezer compartment is too cold.	• Partial restriction in air duct from freezer to refrigerator.	• Check and remove what is causing the restriction. See "Air Flow Diagram".
	• Freezer cold control setting too cold.	• Adjust control for proper adjustment, see "Freezer Cold Control".

© 1997 Maytag Corporation

DISCONNECT THE UNIT FROM THE POWER SOURCE

CONDITION	POSSIBLE CAUSE	CORRECTION
	• High usage of refrigerator especially in high ambient.	• Advise customer.
Unit run excessively. The refrigerator compartment and freezer compartment both too cold (normal wattage readings).	• Setting of temperature control too high for prevailing environmental and usage conditions.	• Reset control.
	• Defective temperature control.	• Replace.
	• Door seals may be leaking	• Adjust door or replace door gasket.
Unit runs excessively, but temperature appears to be normal in refrigerator.	• Problem is one of customer usage and education with severe environmental conditions after confirmation by a temperature recording. Frequent door openings.	• Advise customer.
	• Light may stay on constantly in refrigerator.	• Check light switch and replace if needed. Check door adjustment.
	• Inefficient compressor.	• Replace.
Short running cycle. Refrigerator and freezer compartment are cooling, but are not cold enough.	• Temperature control.	• See below:
	--Defective control (normal wattage readings).	• Replace.
	--Improper setting of temperature control for prevailing environmental and usage conditions.	• Reset control.
	• Air circulation.	• See below:
	--Ventilation around condenser is blocked.	--Check and advise customer.
	--Condenser fan is defective.	--Replace.
	--Dirty or restricted condenser, due to particularly greasy, dusty, or significant pet traffic in the home.	--Advise customer that it may require cleaning periodically in this enviornment.
	--AC circuit to condenser fan is defective (high wattage readings, unit may be cycling on the overload protector).	--Refer to wiring diagrams and check circuit.
	• Compressor motor defective (high wattage readings. Unit may be cycling on the overload protector).	• Replace. --Replace

© 1997 Maytag Corporation

DISCONNECT THE UNIT FROM THE POWER SOURCE

CONDITION	POSSIBLE CAUSE	CORRECTION
	• High resistance contacts or too many broken wire stands in compressor motor AC circuit (high wattage readings, unit may be cycling on the overload protector).	• Check and replace broken part. Refer to wiring diagrams and check circuit.
	• Overload protector defective (normal wattage readings).	• Replace.
	• Too much warm food placed in the unit at one time. May be cycling on overload.	• Advise customer.
Unit runs and cycles about normally. Both compartments cooling, but not enough.	• Defective or temperature control adjusted incorrectly.	• Adjust control or replace if necessary
Unit runs and cycles. Refrigerator is normal, but freezer is not cold enough (normal wattage readings).	• Poor freezer door seal.	• Adjust door or replace if necessary.
	• Freezer air baffle control setting too warm.	• Reset control. For proper setting see "Freezer Cold Control".
	• Room temperature too cold.	• Advise customer.
	• Excessive freezer door openings.	• Advise customer.
	• Too much warm food placed in freezer at one time.	• Advise customer.
	• Few refrigerator door openings (low usage in low ambient temperature).	• Advise customer.
	• Check for refrigerant leaks.	• Repair or replace.
Run time normal. Refrigerator compartment is not cold enough, but freezer compartment is normal or possibly colder than normal. Sweating, but refrigerator and freezer are working normally otherwise.	• Air flow problem.	• Check and remove what is causing the restriction. See "Air Flow Diagram".
	• Interior sweating.	• See below:
	--Bad door seals.	--Replace.
	--Excessive door openings during hot humid weather.	--Advise customer.
	--Storage of excessive uncovered liquids especially if they are inserted into refrigerator while warm.	• Advise customer.

© 1997 Maytag Corporation

DISCONNECT THE UNIT FROM THE POWER SOURCE

CONDITION	POSSIBLE CAUSE	CORRECTION
	--Void in insulation.	--Check and add insulation if possible.
	--Overcharged.	--Evacuate system and recharge with proper amount of refrigerant.
	--Bad door seals.	•Replace.
	--Condenser fan not running.	--Check fan motor and replace part if needed.
Excessive dehydration of food.	•Condition requires covering of food.	•Advise customer.
	•Sublimation of ice cubes is normal in no frost freezers, but should not be a problem in these units equipped with covered ice storage bins.	•Advise customer.
Excessive noisy, but works normally otherwise.	•Refrigerator not level or firmly setting on all four corners.	•Level the unit, lower the level-leveling legs if necessary to make sure that unit is firmly on the floor.
	•Structural weakness in floor.	•Advise customer.
	•Compressor mounting defective.	•Check and replace if necessary.
	•Poor tubing dress.	•Adjust tubes so they do not touch.
		•Advise customer.
	•Compressor operation is noisy due to inherent conditions.	•Tighten loose part or parts.
	•Unit base mounting loose.	•Adjust pan or install foam pad if necessary.
	•Defrost water pan rattles.	•Replace.
	•Freezer or condenser fan is noisy. May have defective motor.	
	•Containers inside refrigerator rattle.	•Advise customer.

© 1997 Maytag Corporation

SECTION 6. SPECIFICATIONS

INDEX

MODEL	DESCRIPTION	PAGE
TOP MOUNT	15 CUBIC FT.	6 - 2
TOP MOUNT	17 CUBIC FT.	6 - 3
TOP MOUNT	19 CUBIC FT.	6 - 4
TOP MOUNT	21 CUBIC FT.	6 - 5
TOP MOUNT	24 CUBIC FT.	6 - 6
TOP MOUNT	26 CUBIC FT.	6 - 7
*TOP MOUNT	19 CUBIC FT. (AUTO DAMPER)	6 - 8
* TOP MOUNT	21 CUBIC FT. (AUTO DAMPER)	6 - 9
*TOP MOUNT	24 CUBIC FT. (AUTO DAMPER)	6 - 10
* TOP MOUNT	26 CUBIC FT. (AUTO DAMPER)	6 - 11

**** MAYTAG, JENN-AIR ONLY***

© 1997 Maytag Corporation

15 Cubic Ft.

Power Requirement	115 VAC 60 HZ
Operating Amps (Max.)	7.2
Refrigerant Charge R134A (oz.)	3.75
Compressor Oil Charge (oz.)	7.1
Compressor (BTU/hr.)	720
Cabinet Liner	High Impact Laminated Polystyrene
Door Liners	High Impact Laminated Polystyrene
Cabinet & Divider Insulation	Foam

***Single Temp Control**	Normal Setting
Cut / Out (±1.5° F)	+16.5° F
Cut / In (±1.5° F)	+36.5° F
****Dual Temp Control**	
Cut / Out (±1.5° F)	+ 19.5° F
Cut / In (±1.5° F)	+ 38.5° F
Condenser	Fan Cooled
Capillary Tube	
Length	96 inches
Diameter	0.028 inches I.D.
Defrost thermostat	
Cut / Out (± 3° F)	+38° F
Cut / In (± 11° F)	+15° F
Defrost Timer	
Defrost Cycle	8 hrs.
Defrost Time	23 ± 2.5 Min.
Defrost Heater	
Ohms	38.3
Watts	345
Defrost Amps. (Max.)	3.0

* Single Control in the Fresh Food Compartment
** Dual Controls in the Fresh Food Compartment

PERFORMANCE TEST DATA

The laboratory test data in this chart was obtained under the following conditions: **(1)** power source of 115V AC, 60 Hz, **(2)** no door openings, **(3)** no load, **(4)** customer control(s) set at mid-point. The pressuress and awattages shown were taken: **(a)** during a normal running cycle, **(b)** with freezer temperature near 0° F (refrigerator temperature, if applicable, near +37° F). **(c)** no sooner than 5 minutes after compressor start-up. In the home, measurements will vary depending upon environmental and usage conditions.

	70° F (Ambient)	**90° F (Ambient)**	**110° F (Ambient)**
% Operating Timer	25 - 35	45 - 55	70 - 80
KWH/24 Hours	1.1 - 1.4	1.9 - 2.2	3.0 - 3.3
Suction Pressure (psig)	- 2 to + 2	- 2 to + 4	0 to + 6
High Side Pressure (psig)	115 - 135	150 - 170	190 - 220
Running Watts	150 - 175	155 - 180	160 - 185

© 1997 Maytag Corporation

17Cubic Ft.

Power Requirement	115 VAC 60 HZ
Operating Amps (Max.)	7.2
Refrigerant Charge R134A (oz.)	3.4
Compressor Oil Charge (oz.)	8.5
Compressor (BTU/hr.)	789
Cabinet Liner	High Impact Laminated Polystyrene
Door Liners	High Impact Laminated Polystyrene
Cabinet & Divider Insulation	Foam

***Single Temp Control**	Normal Setting
Cut / Out (±1.5° F)	+16.5° F
Cut / In (±1.5° F)	+36.5° F
****Dual Temp Control**	
Cut / Out (±1.5° F)	+ 19.5°F
Cut / In (±1.5° F)	+ 38.5° F
Condenser	Fan Cooled
Capillary Tube	
Length	96 inches
Diameter	0.028 inches I.D.
Defrost thermostat	
Cut / Out (± 3° F)	+38°F
Cut / In (± 11° F)	+15° F
Defrost Timer	
Defrost Cycle	8 hrs.
Defrost Time	23 ± 2.5 Min.
Defrost Heater	
Ohms	38.3
Watts	345
Defrost Amps. (Max.)	3.0

* Single Control in the Fresh Food Compartment
** Dual Controls in the Fresh Food Compartment

PERFORMANCE TEST DATA

The laboratory test data in this chart was obtained under the following conditions: **(1)** power source of 115V AC, 60 Hz. **(2)** no door openings, **(3)** no load, **(4)** customer control(s) set at mid-point, The pressures and wattages shown were taken: **(a)** during a normal running cycle, **(b)** with freezer temperature near 0° F (refrigerator temperature, if applicable, near +37° F), **(c)** no sooner than 5 minutes after compressor start-up. In the home, measurements will vary depending upon environmental and usage conditions.

	70° F (Ambient)	90° F (Ambient)	110°F (Ambient)
% Operating Time	25 - 35	45 - 55	70 - 80
KWH/24 Hours	1.1 - 1.4	1.9 - 2.2	3.0 - 3.3
Suction Pressure (psig)	-2 to +2	-2 to +4	0 to +6
High Side Pressure (psig)	115 - 135	150 - 170	190 - 220
Running Watts	160 - 180	165 - 185	170 - 190

© 1997 Maytag Corporation

19 Cubic Ft.

Power Requirement	115 VAC 60 HZ
Operating Amps (Max.)	7.2
Refrigerant Charge R134A (oz.)	3.6
Compressor Oil Charge (oz.)	8.5
Compressor (BTU/hr.)	789
Cabinet Liner	High Impact Laminated Polystyrene
Door Liners	High Impact Laminated Polystyrene
Cabinet & Divider Insulation	Foam

***Single Temp Control**	Normal Setting
Cut / Out (±1.5° F)	+16.5° F
Cut / In (±1.5° F)	+36.5° F
****Dual Temp Control**	
Cut / Out (±1.5° F)	+ 19.0° F
Cut / In (±1.5° F)	+ 37.0° F
Condenser	Fan Cooled
Capillary Tube	
Length	96 inches
Diameter	0.028 inches I.D.
Defrost thermostat	
Cut / Out (± 3° F)	+38° F
Cut / In (± 11° F)	+15° F
Defrost Timer	
Defrost Cycle	10 hrs.
Defrost Time	21 ± 2.0 Min.
Defrost Heater	
Ohms	28.6
Watts	400
Defrost Amps. (Max.)	3.7

* Single Control in the Fresh Food Compartment
** Dual Controls in the Fresh Food Compartment

PERFORMANCE TEST DATA

The laboratory test data in this chart was obtained under the following conditions: **(1)** power source of 115V AC, 60 Hz. **(2)** no door openings, **(3)** no load, **(4)** customer control(s) set at mid-point, The pressures and wattages shown were taken: **(a)** during a normal running cycle, **(b)** with freezer temperature near 0° F (refrigerator temperature, if applicable, near +37° F), **(c)** no sooner than 5 minutes after compressor start-up. In the home, measurements will vary depending upon environmental and usage conditions.

	70° F (Ambient)	90° F (Ambient)	110°F (Ambient)
% Operating Time	25 - 35	45 - 55	70 - 80
KWH/24 Hours	1.1 - 1.4	1.9 - 2.2	3.0 - 3.3
Suction Pressure (psig)	-2 to +2	-2 to +4	0 to +6
High Side Pressure (psig)	115 - 135	150 - 170	190 - 220
Running Watts	160 - 180	165 - 185	170 - 190

© 1997 Maytag Corporation

21 Cubic Ft.

Power Requirement	115 VAC 60 HZ
Operating Amps (Max.)	7.2
Refrigerant Charge R134A (oz.)	4.0
Compressor Oil Charge (oz.)	8.5
Compressor (BTU/hr.)	789
Cabinet Liner	High Impact Laminated Polystyrene
Door Liners	High Impact Laminated Polystyrene
Cabinet & Divider Insulation	Foam

Dual Temp. Control	Normal Setting
Cut / Out (±1.5° F)	+19.0° F
Cut / In (±1.5° F)	+37.0° F
Condenser	Fan Cooled
Capillary Tube	
Length	96 inches
Diameter	0.028 inches I.D.
Defrost thermostat	
Cut / Out (± 3° F)	+38° F
Cut / In (± 11° F)	+15° F
Defrost Timer	
Defrost Cycle	10 hrs.
Defrost Time	21 ± 2.0 Min.
Defrost Heater	
Ohms	29.0
Watts	435
Defrost Amps. (Max.)	3.9

PERFORMANCE TEST DATA

The laboratory test data in this chart was obtained under the following conditions: **(1)** power source of 115V AC, 60 Hz. **(2)** no door openings, **(3)** no load, **(4)** customer control(s) set at mid-point, The pressures and wattages shown were taken: **(a)** during a normal running cycle, **(b)** with freezer temperature near 0° F (refrigerator temperature, if applicable, near +37° F), **(c)** no sooner than 5 minutes after compressor start-up. In the home, measurements will vary depending upon environmental and usage conditions.

	70° F (Ambient)	**90° F (Ambient)**	**110°F (Ambient)**
% Operating Time	25 - 35	45 - 55	70 - 80
KWH/24 Hours	1.1 - 1.4	1.9 - 2.2	3.0 - 3.3
Suction Pressure (psig)	-2 to +2	-2 to +4	0 to +6
High Side Pressure (psig)	115 - 135	150 - 170	190 - 220
Running Watts	160 - 180	165 - 185	170 - 190

© 1997 Maytag Corporation

24 Cubic Ft.

Power Requirement	115 VAC 60 HZ
Operating Amps (Max.)	7.2
Refrigerant Charge R134A (oz.)	4.25
Compressor Oil Charge (oz.)	8.5
Compressor (BTU/hr.)	789
Cabinet Liner	High Impact Laminated Polystyrene
Door Liners	High Impact Laminated Polystyrene
Cabinet & Divider Insulation	Foam

Dual Temp. Control	Normal Setting
Cut / Out (±1.5° F)	+23.0° F
Cut / In (±1.5° F)	+37.0° F
Condenser	Fan Cooled
Capillary Tube	
Length	96 inches
Diameter	0.028 inches I.D.
Defrost thermostat	
Cut / Out (± 3° F)	+38° F
Cut / In (± 11° F)	+15° F
Defrost Timer	
Defrost Cycle	10 hrs.
Defrost Time	21 ± 2.0 Min.
Defrost Heater	
Ohms	29.0
Watts	435
Defrost Amps. (Max.)	3.9

PERFORMANCE TEST DATA

The laboratory test data in this chart was obtained under the following conditions: **(1)** power source of 115V AC, 60 Hz. **(2)** no door openings, **(3)** no load, **(4)** customer control(s) set at mid-point, The pressures and wattages shown were taken: **(a)** during a normal running cycle, **(b)** with freezer temperature near 0° F (refrigerator temperature, if applicable, near +37° F), **(c)** no sooner than 5 minutes after compressor start-up. In the home, measurements will vary depending upon environmental and usage conditions.

	70° F (Ambient)	**90° F (Ambient)**	**110°F (Ambient)**
% Operating Time	25 - 35	45 - 55	70 - 80
KWH/24 Hours	1.1 - 1.4	1.9 - 2.2	3.0 - 3.3
Suction Pressure (psig)	-2 to +2	-2 to +4	0 to +6
High Side Pressure (psig)	115 - 135	150 - 170	190 - 220
Running Watts	160 - 180	165 - 185	170 - 190

© 1997 Maytag Corporation

26 Cubic Ft.

Power Requirement	115 VAC 60 HZ
Operating Amps (Max.)	7.2
Refrigerant Charge R134A (oz.)	4.5
Compressor Oil Charge (oz.)	8.5
Compressor (BTU/hr.)	789
Cabinet Liner	High Impact Laminated Polystyrene
Door Liners	High Impact Laminated Polystyrene
Cabinet & Divider Insulation	Foam

Dual Temp. Control	Normal Setting
Cut / Out (±1.5° F)	+16.5° F
Cut / In (±1.5° F)	+36.5° F
Condenser	Fan Cooled
Capillary Tube	
Length	96 inches
Diameter	0.028 inches I.D.
Defrost thermostat	
Cut / Out (± 3° F)	+38° F
Cut / In (± 11° F)	+15° F
Defrost Timer	
Defrost Cycle	10 hrs.
Defrost Time	21 ± 2.0 Min.
Defrost Heater	
Ohms	26.5
Watts	475
Defrost Amps. (Max.)	4.2

PERFORMANCE TEST DATA

The laboratory test data in this chart was obtained under the following conditions: **(1)** power source of 115V AC, 60 Hz. **(2)** no door openings, **(3)** no load, **(4)** customer control(s) set at mid-point, The pressures and wattages shown were taken: **(a)** during a normal running cycle, **(b)** with freezer temperature near 0° F (refrigerator temperature, if applicable, near +37° F), **(c)** no sooner than 5 minutes after compressor start-up. In the home, measurements will vary depending upon environmental and usage conditions.

	70° F (Ambient)	**90° F (Ambient)**	**110°F (Ambient)**
% Operating Time	25 - 35	45 - 55	70 - 80
KWH/24 Hours	1.1 - 1.4	1.9 - 2.2	3.0 - 3.3
Suction Pressure (psig)	-2 to +2	-2 to +4	0 to +6
High Side Pressure (psig)	115 - 135	150 - 170	190 - 220
Running Watts	160 - 180	165 - 185	170 - 190

© 1997 Maytag Corporation

19 Cubic Ft. Auto Damper

Power Requirement	115 VAC 60 HZ
Operating Amps (Max.)	7.2
Refrigerant Charge R134A (oz.)	3.4
Compressor Oil Charge (oz.)	13.0
Compressor (BTU/hr.)	825
Cabinet Liner	High Impact Laminated Polystyrene
Door Liners	High Impact Laminated Polystyrene
Cabinet & Divider Insulation	Foam

Auto Damper Control	Normal Setting +29° F
Temperature Control	**Normal Setting**
Cut / Out (±1.5° F)	- 4° F
Cut / In (±1.5° F)	+14.0° F
Condenser	Fan Cooled
Capillary Tube	
Length	96 inches
Diameter	0.028 inches I.D.
Defrost thermostat	
Cut / Out (± 3° F)	+38° F
Cut / In (± 11° F)	+15° F
Defrost Timer	
Defrost Cycle	10 hrs.
Defrost Time	21 ± 2.0 Min.
Defrost Heater	
Ohms	28.6
Watts	400
Defrost Amps. (Max.)	3.7

PERFORMANCE TEST DATA

The laboratory test data in this chart was obtained under the following conditions: **(1)** power source of 115V AC, 60 Hz. **(2)** no door openings, **(3)** no load, **(4)** customer control(s) set at mid-point, The pressures and wattages shown were taken: **(a)** during a normal running cycle, **(b)** with freezer temperature near 0° F (refrigerator temperature, if applicable, near +37° F), **(c)** no sooner than 5 minutes after compressor start-up. In the home, measurements will vary depending upon environmental and usage conditions.

	70° F (Ambient)	**90° F (Ambient)**	**110°F (Ambient)**
% Operating Time	25 - 35	45 - 55	70 - 80
KWH/24 Hours	1.1 - 1.4	1.9 - 2.2	3.0 - 3.3
Suction Pressure (psig)	-2 to +2	-2 to +4	0 to +6
High Side Pressure (psig)	115 - 135	150 - 170	190 - 220
Running Watts	135 - 165	140 - 170	145 - 175

© 1997 Maytag Corporation

21 Cubic Ft. Auto Damper

Power Requirement	115 VAC 60 HZ
Operating Amps (Max.)	7.2
Refrigerant Charge R134A (oz.)	3.6
Compressor Oil Charge (oz.)	13.0
Compressor (BTU/hr.)	825
Cabinet Liner	High Impact Laminated Polystyrene
Door Liners	High Impact Laminated Polystyrene
Cabinet & Divider Insulation	Foam

Auto Damper Control	Normal Setting +29° F
Temperature Control	**Normal Setting**
Cut / Out (±1.5° F)	- 4° F
Cut / In (±1.5° F)	+14.0° F
Condenser	Fan Cooled
Capillary Tube	
Length	96 inches
Diameter	0.028 inches I.D.
Defrost thermostat	
Cut / Out (± 3° F)	+38° F
Cut / In (± 11° F)	+15° F
Defrost Timer	
Defrost Cycle	10 hrs.
Defrost Time	21 ± 2.0 Min.
Defrost Heater	
Ohms	29.0
Watts	435
Defrost Amps. (Max.)	3.0

PERFORMANCE TEST DATA

The laboratory test data in this chart was obtained under the following conditions: **(1)** power source of 115V AC, 60 Hz. **(2)** no door openings, **(3)** no load, **(4)** customer control(s) set at mid-point, The pressures and wattages shown were taken: **(a)** during a normal running cycle, **(b)** with freezer temperature near 0° F (refrigerator temperature, if applicable, near +37° F), **(c)** no sooner than 5 minutes after compressor start-up. In the home, measurements will vary depending upon environmental and usage conditions.

	70° F (Ambient)	**90° F (Ambient)**	**110°F (Ambient)**
% Operating Time	25 - 35	45 - 55	70 - 80
KWH/24 Hours	1.1 - 1.4	1.9 - 2.2	3.0 - 3.3
Suction Pressure (psig)	-2 to +4	-2 to +4	0 to +6
High Side Pressure (psig)	115 - 135	150 - 170	190 - 220
Running Watts	135 - 165	140 - 170	145 - 175

© 1997 Maytag Corporation

24 Cubic Ft. Auto Damper

Power Requirement	115 VAC 60 HZ
Operating Amps (Max.)	7.2
Refrigerant Charge R134A (oz.)	4.0
Compressor Oil Charge (oz.)	13.0
Compressor (BTU/hr.)	825
Cabinet Liner	High Impact Laminated Polystyrene
Door Liners	High Impact Laminated Polystyrene
Cabinet & Divider Insulation	Foam

Auto Damper Control	Normal Setting +20° F
Temperature Control	**Normal Setting**
Cut / Out (±1.5° F)	- 3.5° F
Cut / In (±1.5° F)	+17.0° F
Condenser	Fan Cooled
Capillary Tube	
Length	96 inches
Diameter	0.028 inches I.D.
Defrost thermostat	
Cut / Out (± 3° F)	+38° F
Cut / In (± 11° F)	+15° F
Defrost Timer	
Defrost Cycle	10 hrs.
Defrost Time	21 ± 2.0 Min.
Defrost Heater	
Ohms	20.0
Watts	435
Defrost Amps. (Max.)	3.9

PERFORMANCE TEST DATA

The laboratory test data in this chart was obtained under the following conditions: **(1)** power source of 115V AC, 60 Hz. **(2)** no door openings, **(3)** no load, **(4)** customer control(s) set at mid-point, The pressures and wattages shown were taken: **(a)** during a normal running cycle, **(b)** with freezer temperature near 0° F (refrigerator temperature, if applicable, near +37° F), **(c)** no sooner than 5 minutes after compressor start-up. In the home, measurements will vary depending upon environmental and usage conditions.

	70° F (Ambient)	**90° F (Ambient)**	**110°F (Ambient)**
% Operating Time	25 - 35	45 - 55	70 - 80
KWH/24 Hours	1.1 - 1.4	1.9 - 2.2	3.0 - 3.3
Suction Pressure (psig)	-2 to +4	-2 to +4	0 to +6
High Side Pressure (psig)	115 - 135	150 - 170	190 - 220
Running Watts	135 - 165	140 - 170	145 - 175

© 1997 Maytag Corporation

26 Cubic Ft. Auto Damper

Power Requirement	115 VAC 60 HZ
Operating Amps (Max.)	7.2
Refrigerant Charge R134A (oz.)	4.5
Compressor Oil Charge (oz.)	13.0
Compressor (BTU/hr.)	825
Cabinet Liner	High Impact Laminated Polystyrene
Door Liners	High Impact Laminated Polystyrene
Cabinet & Divider Insulation	Foam

Auto Damper Control	Normal Setting +20° F
Temperature Control	**Normal Setting**
Cut / Out (±1.5° F)	- 3.5° F
Cut / In (±1.5° F)	+17.0° F
Condenser	Fan Cooled
Capillary Tube	
Length	96 inches
Diameter	0.028 inches I.D.
Defrost thermostat	
Cut / Out (± 3° F)	+38° F
Cut / In (± 11° F)	+15° F
Defrost Timer	
Defrost Cycle	10 hrs.
Defrost Time	21 ± 2.0 Min.
Defrost Heater	
Ohms	26.5
Watts	475
Defrost Amps. (Max.)	4.2

PERFORMANCE TEST DATA

The laboratory test data in this chart was obtained under the following conditions: **(1)** power source of 115V AC, 60 Hz. **(2)** no door openings, **(3)** no load, **(4)** customer control(s) set at mid-point, The pressures and wattages shown were taken: **(a)** during a normal running cycle, **(b)** with freezer temperature near 0° F (refrigerator temperature, if applicable, near +37° F), **(c)** no sooner than 5 minutes after compressor start-up. In the home, measurements will vary depending upon environmental and usage conditions.

	70° F (Ambient)	**90° F (Ambient)**	**110°F (Ambient)**
% Operating Time	25 - 35	45 - 55	70 - 80
KWH/24 Hours	1.1 - 1.4	1.9 - 2.2	3.0 - 3.3
Suction Pressure (psig)	-2 to +4	-2 to +4	0 to +6
High Side Pressure (psig)	115 - 135	150 - 170	190 - 220
Running Watts	135 - 165	140 - 170	145 - 175

© 1997 Maytag Corporation

© 1997 Maytag Corporation

SECTION 7. SCHEMATICS

INDEX

MODEL	DESCRIPTION	PAGE
TOP MOUNT	ON PROVISIONAL & PROVISIONAL ICE MAKER MODELS	7-2 - 7-4
TOP MOUNT	DUAL SLIDE CONTROL MODELS (MAYTAG & JENN-AIR)	7-5 - 7-7

© 1997 Maytag Corporation

DISCONNECT THE UNIT FROM THE POWER SOURCE

PICTORIAL WIRING DIAGRAM
ALLOW 10 PERCENT TOLERANCE ON ALL RESISTANCE

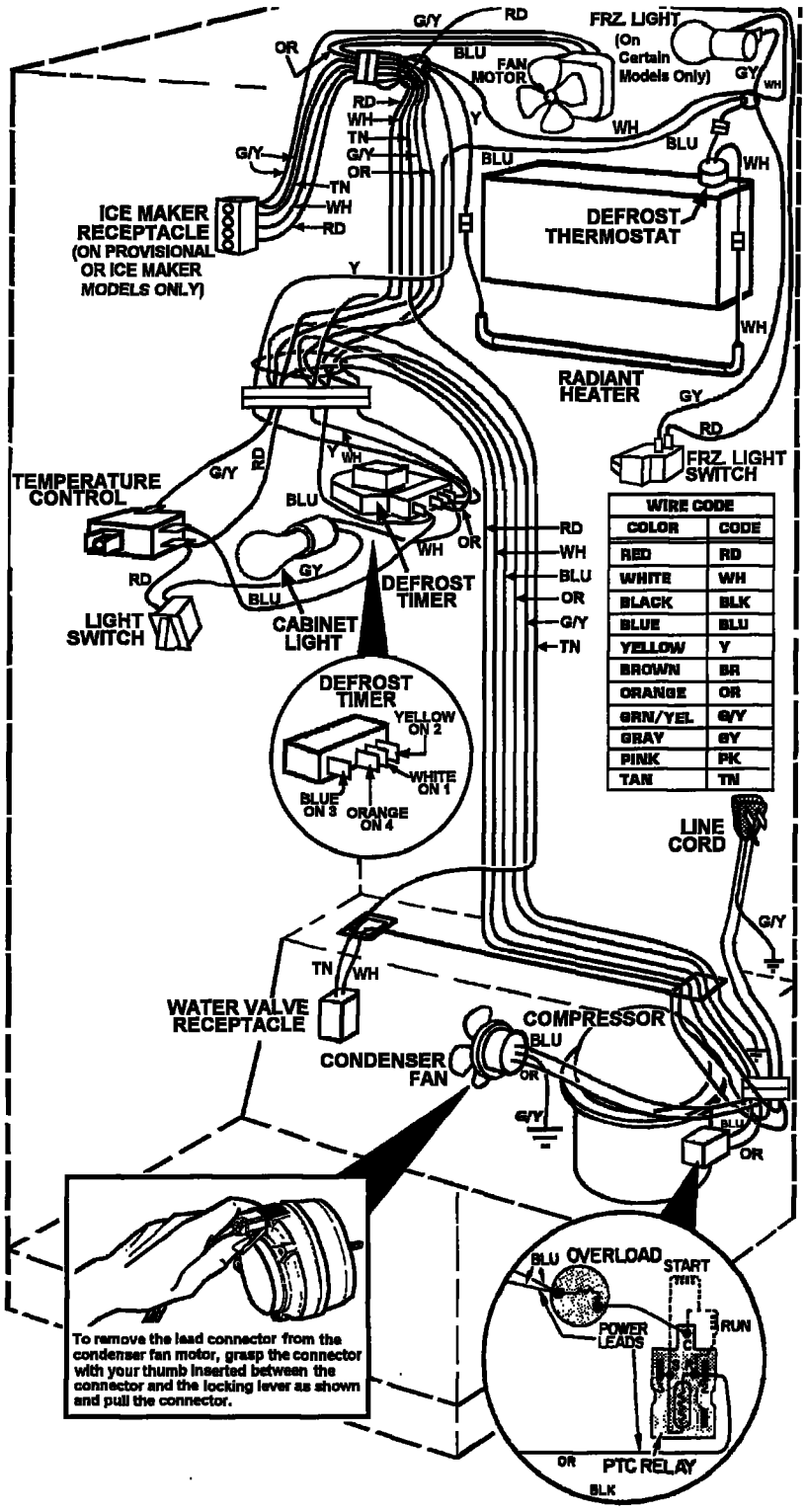

© 1997 Maytag Corporation

SCHEMATIC WIRING DIAGRAM

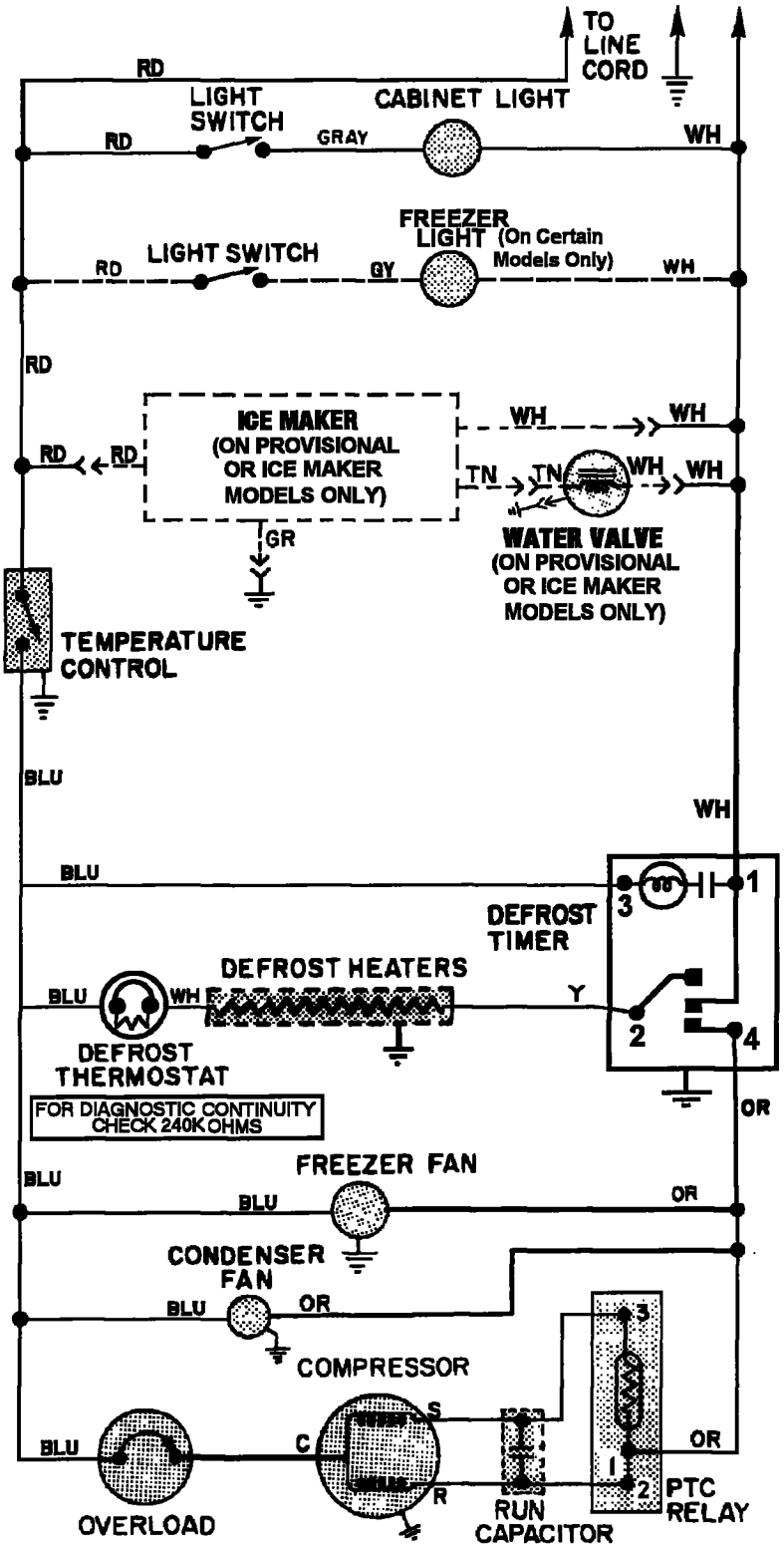

© 1997 Maytag Corporation

REFRIGERANT FLOW

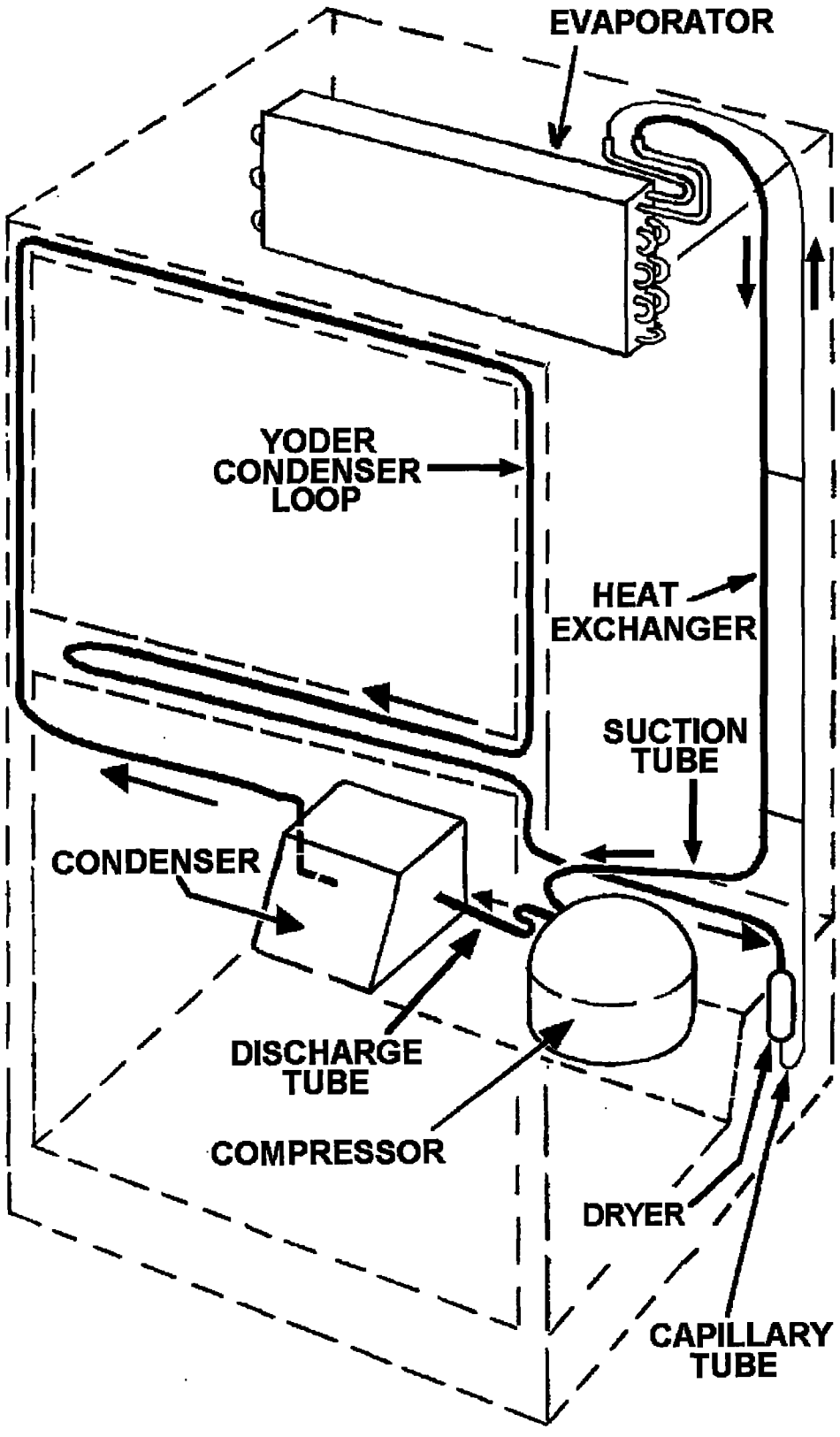

© 1997 Maytag Corporation

AUTO DAMPER MODELS

DISCONNECT THE UNIT FROM THE POWER SOURCE

PICTORIAL WIRING DIAGRAM

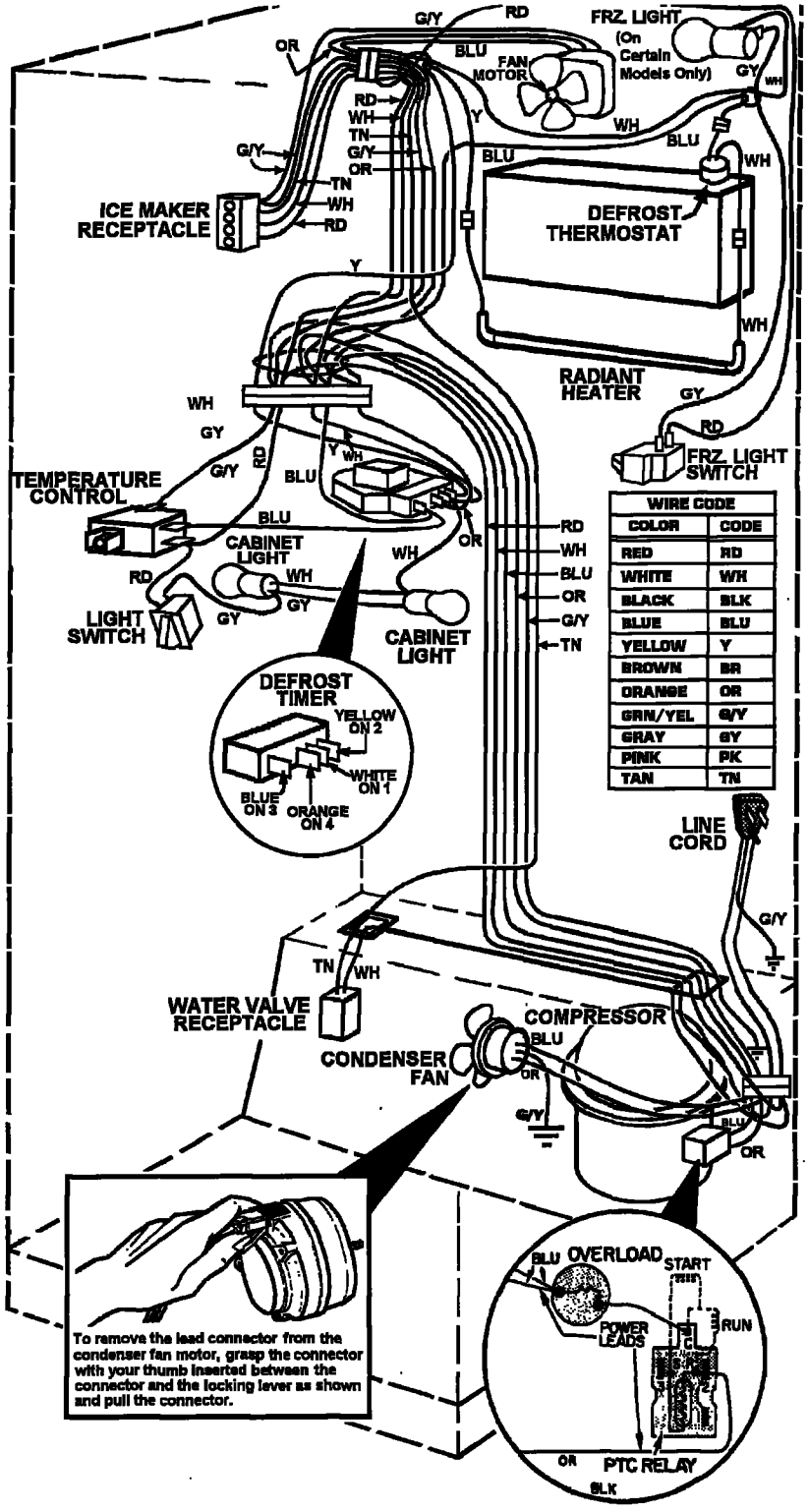

WIRE CODE	
COLOR	CODE
RED	RD
WHITE	WH
BLACK	BLK
BLUE	BLU
YELLOW	Y
BROWN	BR
ORANGE	OR
GRN/YEL	G/Y
GRAY	GY
PINK	PK
TAN	TN

© 1997 Maytag Corporation

SCHEMATIC WIRING DIAGRAM

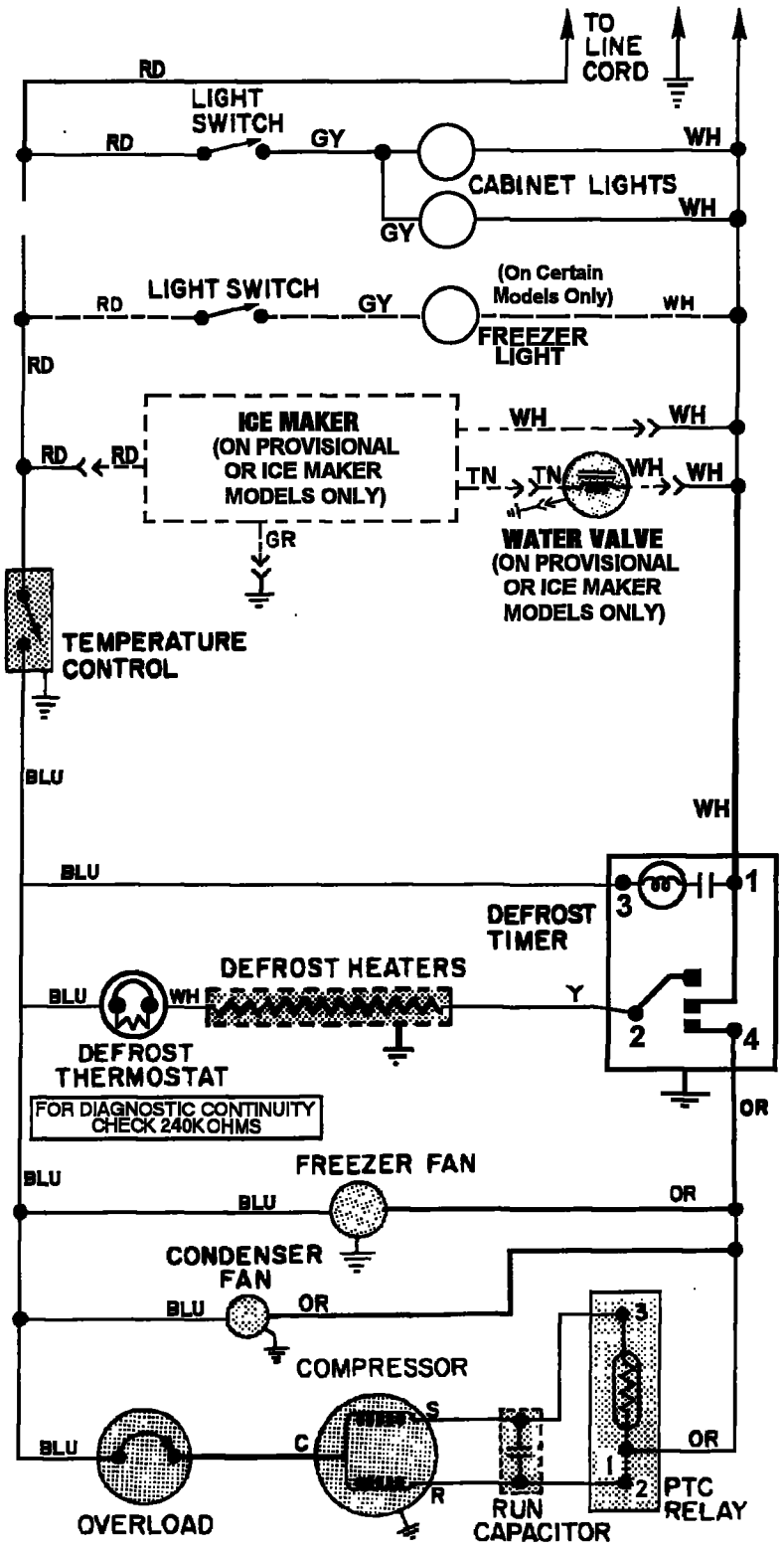

© 1997 Maytag Corporation

REFRIGERANT FLOW

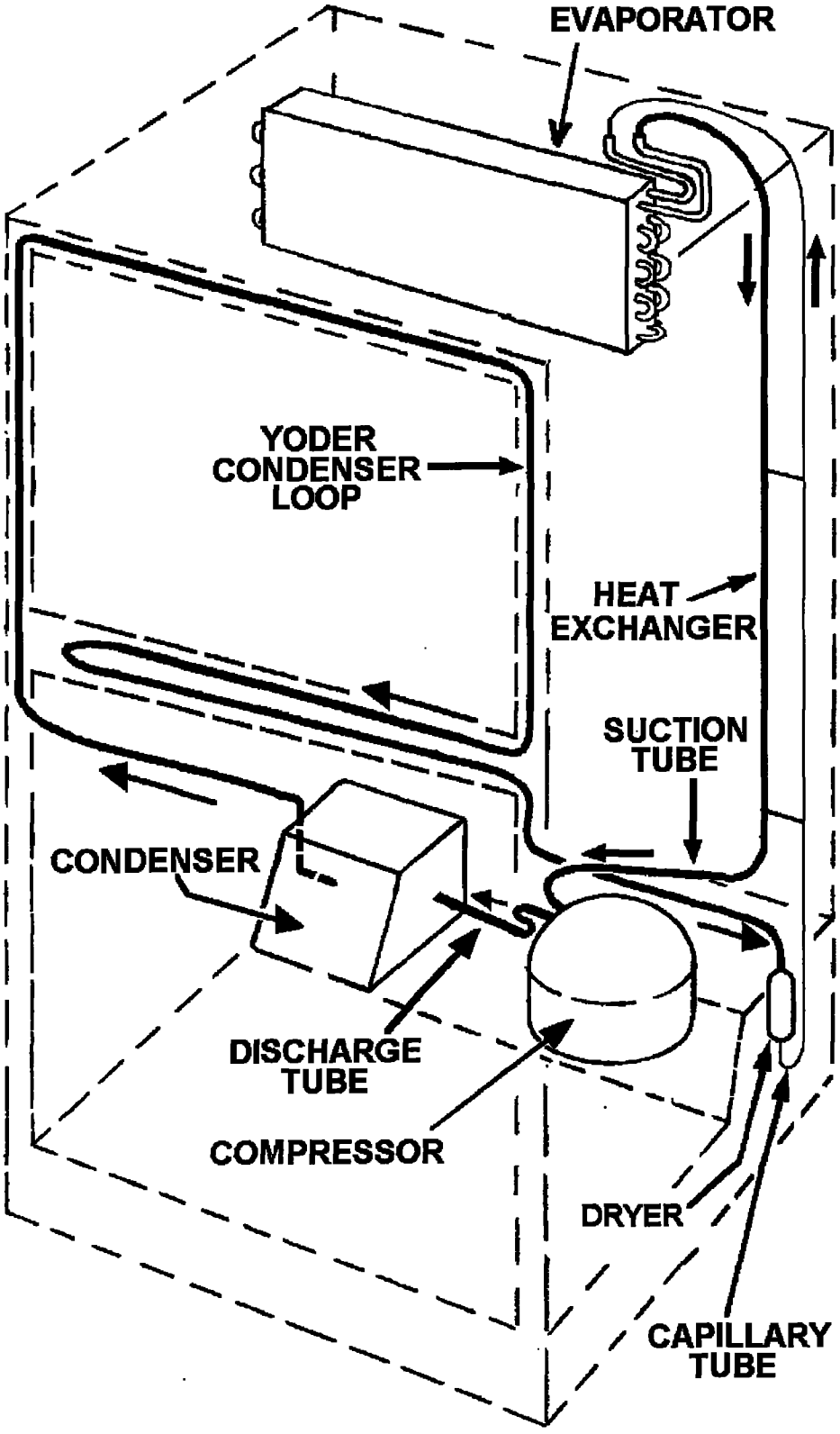

© 1997 Maytag Corporation

© 1997 Maytag Corporation

MAYTAG

Customer Service
240 Edwards St.
Cleveland, TN 37311