S/M No. : FR33000011

DAEWOO

Service Manual

Refrigerator

Model: FR-330

✔ Caution

: In this Manual, some parts can be changed for improving, their performance without notice in the parts list. So, if you need the latest parts information,please refer to PPL(Parts Price List) in Service Information Center (http://svc.dwe.co.kr).



DAEWOO ELECTRONICS CO., LTD.

Download from Www.Somanuals.com. All Manuals Search And Download.

CONTENTS

contents

1. SPECIFICATION 1

2. NAME OF PARTS 2

3. REFRIGERANT CYCLE DIAGRAM 3

4. MACHINE ROOM VIEW AND PART LIST 4

5. METHODS OF EXCHANGING MAIN PARTS 5

6. EXPLODE VIEW AND PARTS LIST 9

7. PARTS LIST 10

Download from Www.Somanuals.com. All Manuals Search And Download.

1.Specification

Refrigerant	R134a	100g
COOLING System	Fan Cooling Convection Type	
Refrigeration System	Air Forced Convection	
Defrost System	Forced Fin-Evaporator Type	
Defrost Operation	Automatic Start & Stop	
Cold Control	Adjustable Dial	
Capacity	Freezer	61L
	Refrigerator	207L
	Total	268L
External Dimension	Height	1636mm
	Width	600mm
	Depth	729mm
Net Weight	57Kg	

Download from Www.Somanuals.com. All Manuals Search And Download.

2. NAME OF PARTS

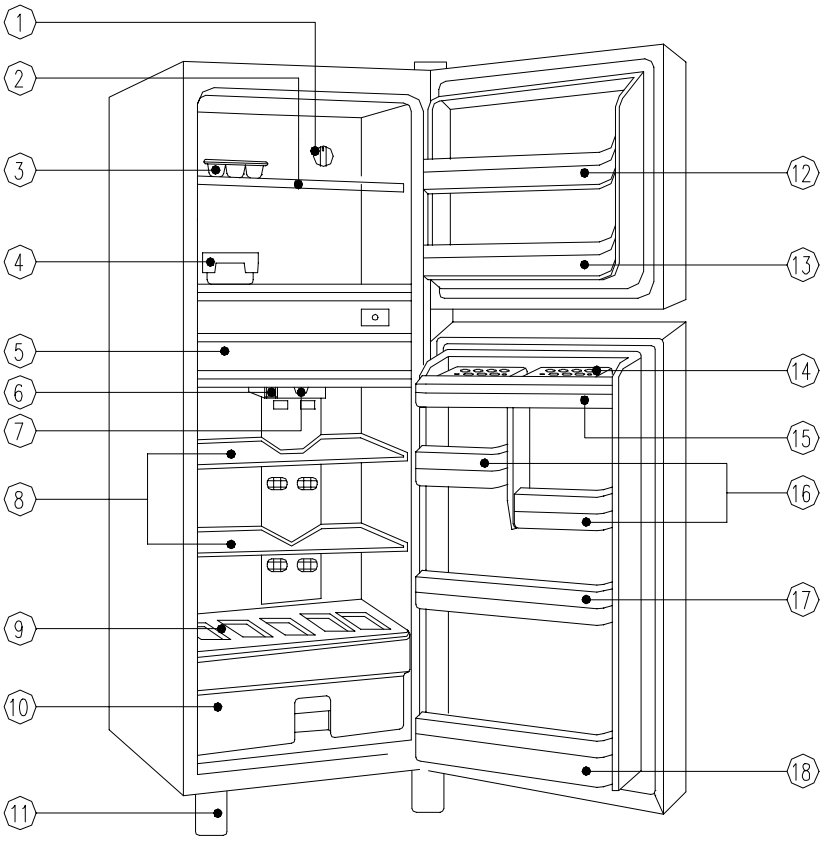

1. FREEZER TEMPERATURE CONTROL KNOB
2. F SHELF
3. CASE ICING
4. CASE ICE
5. CHILLED CORNER
6. LAMP COVER
7. REFRIGERATOR TEMPERATURE CONTROL SWITCH
8. R SHELF
9. CRISPER COVER
10. CRISPER
11. ADJUSTABLE FOOT
12. POCKET F T
13. POCKET F U
14. EGG CASE
15. EGG POCKET
16. POCKET MULT
17. POCKET BOTL
18. POCKET SM

Download from Www.Somanuals.com. All Manuals Search And Download.

3. REFRIGERANT CYCLE DIAGRAM

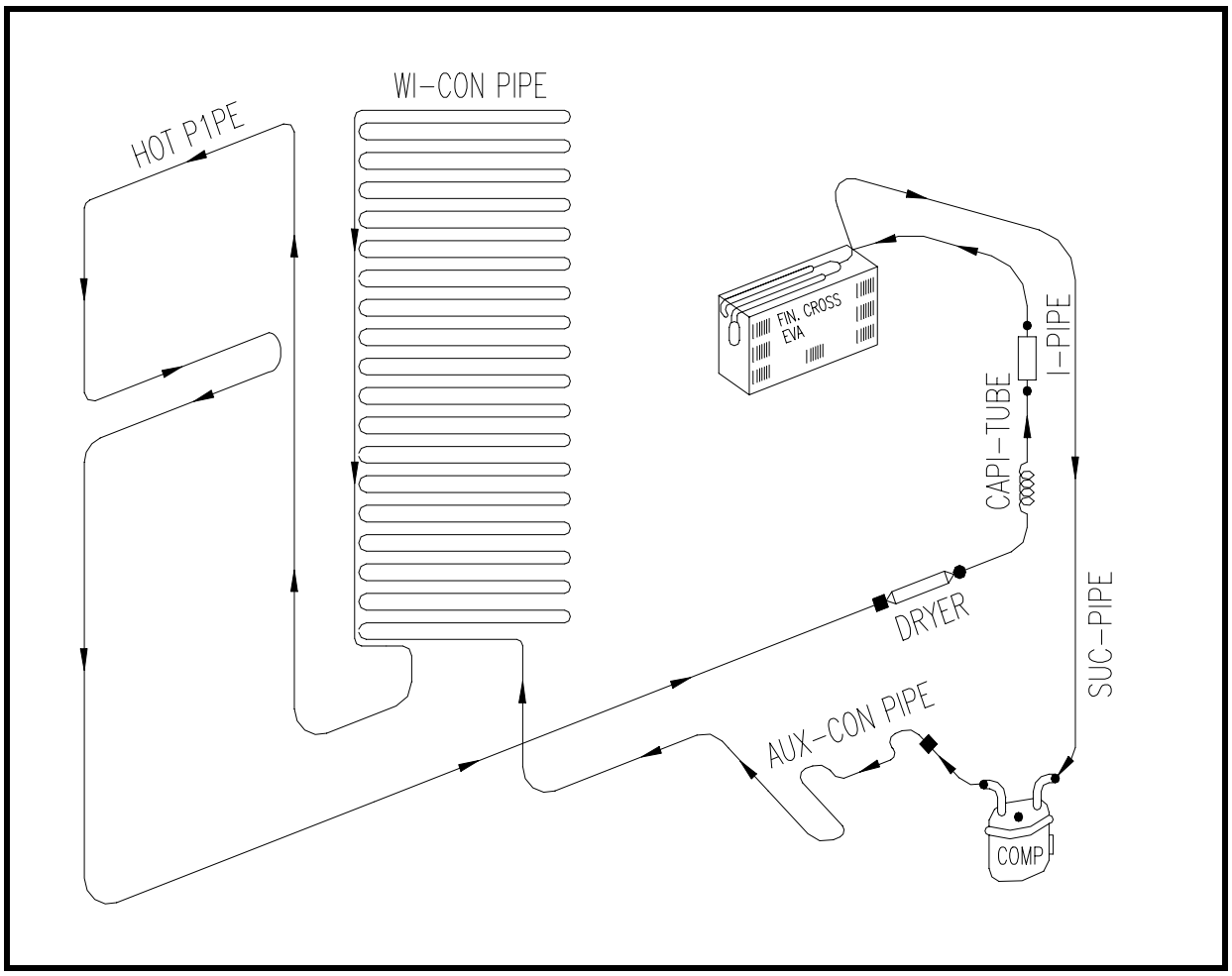

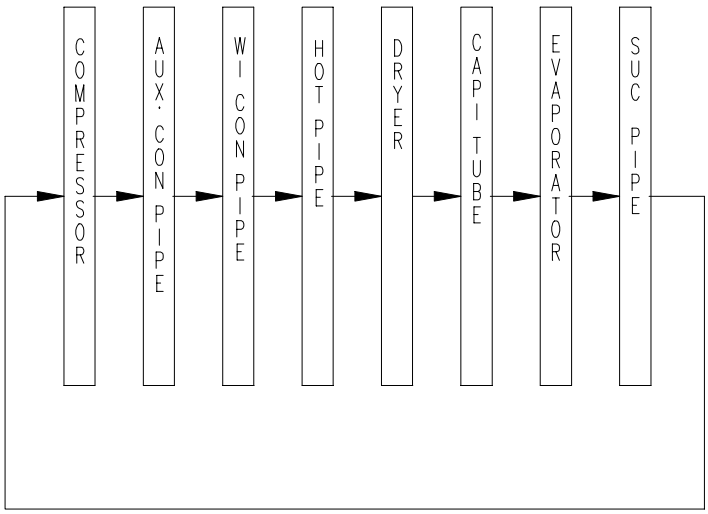

Download from Www.Somanuals.com. All Manuals Search And Download.

4. MACHINE ROOM VIEW AND PART LIST

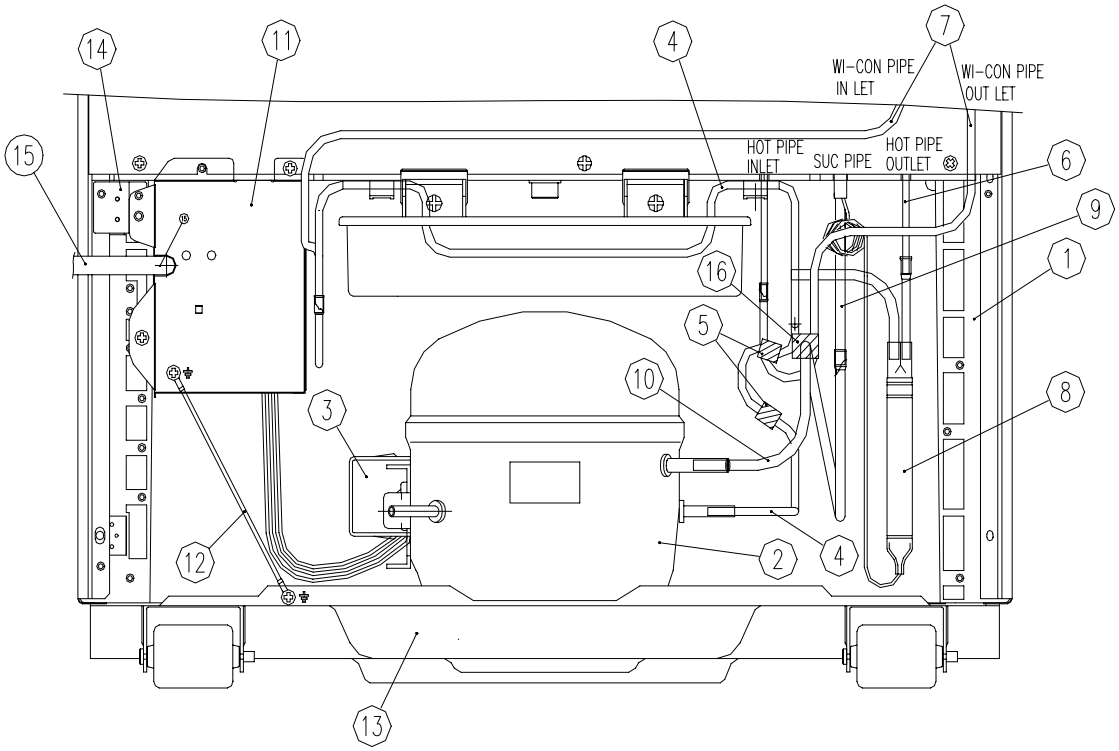

NO	PART NAME	NO	PART NAME	NO	PART NAME
1	BASE CAB AS	7	WI-CON PIPE	13	BASE COMP AS
2	COMPRESSOR	8	DRYER AS	14	BRACKET EARTH
3	P-RELAY AS	9	PIPE SUC AS	15	POWER CORD AS
4	PIPE VAPORI AS	10	PIPE SUC CONN	16	ABSORBER PIPE A
5	ABSORBER PIPE B	11	BOX POWER AS		
6	PIPE HOT	12	HARNESS EARTH		

Download from Www.Somanuals.com. All Manuals Search And Download.

5. METHODS OF EXCHANGING MAIN PARTS

(1) Freezing room louver

1) Unscrew, remove the F-louver by pulling forward with inserting screwdriver into the hole of F louver.



2) Assemble it by pressing triangle shape (△) by hand.

(2) R control box

1) After pressing both bottom surfaces of shade and pull forward.



2) To exchange the interior lamp, unscrew the lamp counterclockwise.

3) Remove two screws



Download from Www.Somanuals.com. All Manuals Search And Download.

Methode of exchanging main parts

4) Pull slightly forward with instant force.



5) Remove the housing



6) After romoving the control switch knob and two screws for fixing control switch, change the control switch to new one.

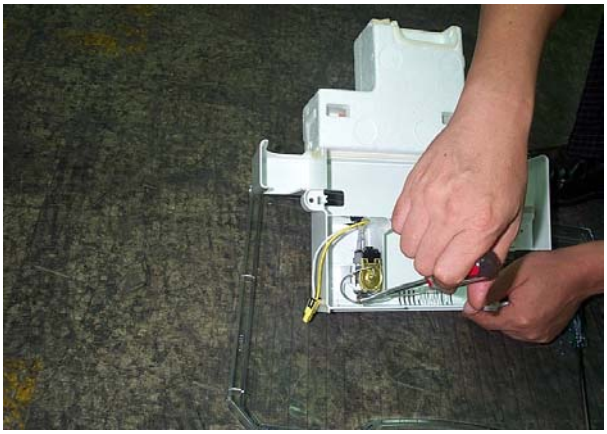

Download from Www.Somanuals.com. All Manuals Search And Download.

Methode of exchanging main parts

(3) Bimetal

1) Cut off the wire bind.

2) Take out the bimetal.

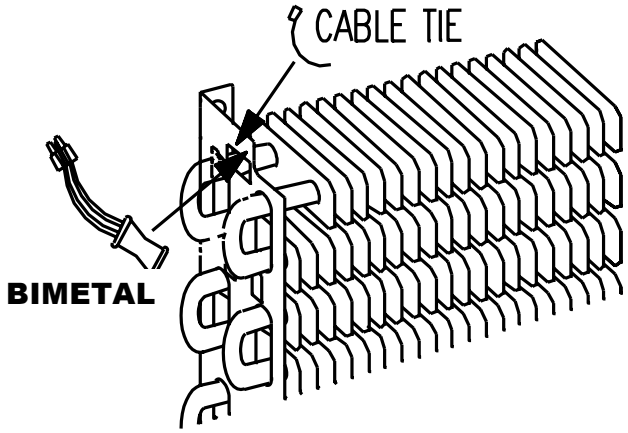

(4) Glass tube heater

1) Remove 2 screws that fasten the evaporator

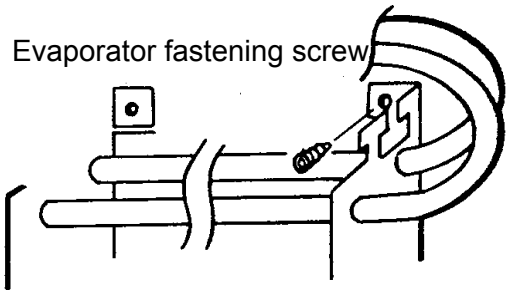

2) Slightly pull the evaporator to the arrow's direction.

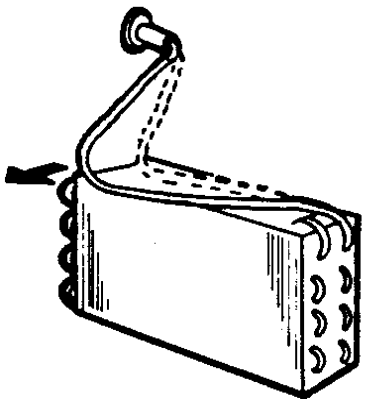

3) Move the entire eveporator upward the pipe center to the arrow's direction.
(Do not crumble the part A of the accumulator during the process.)

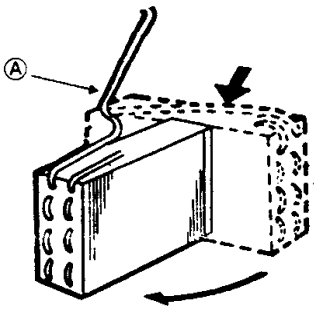

Download from Www.Somanuals.com. All Manuals Search And Download.

4) Cut the both ends of glass tube heater tube heater lead wires and insulate and seal lead tip remaining in refrigerator with tape etc.

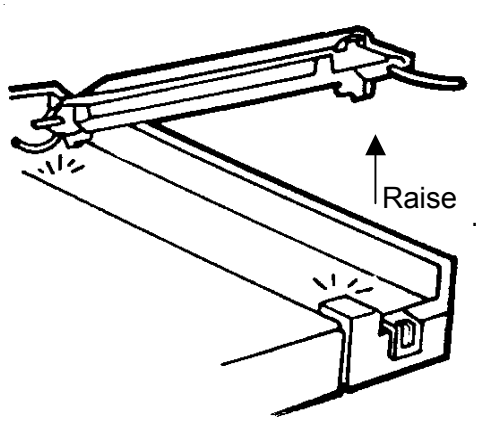

5) Pull out the glass tube heater from the heate supporter with heater covers remaining. (upper and lower) (Do not apply much power on the heater supporter.)

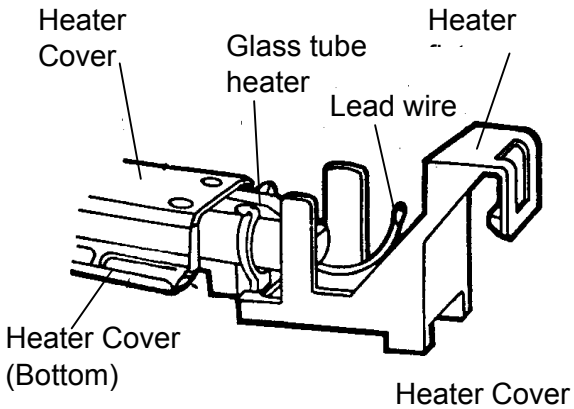

6) Install the heater covers (upper and lower) on a new glass tube heater. (Make the cover with holes the lower one)

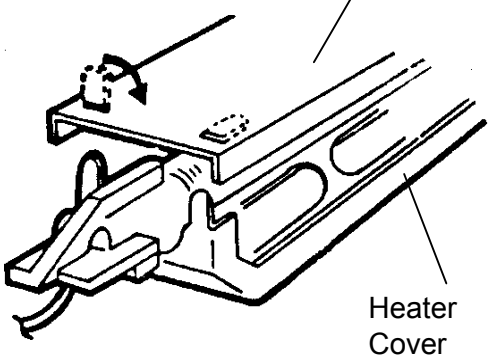

7) Place the glass tube heater lead wire shown as below and fasten the shaded area with type.
8) Fin insert the lead wire connection terminals. (Same colored lead wires)
9) Set the evaporator on normal position and secure the fastening screws.

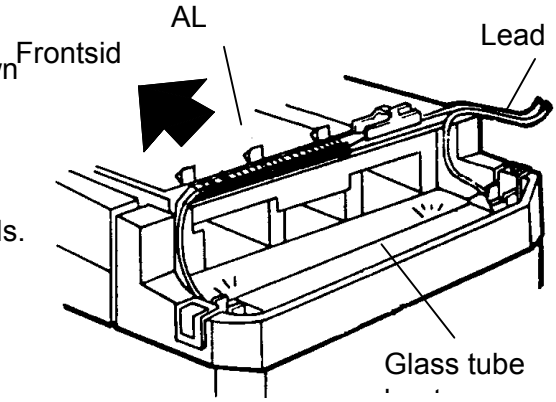

Download from Www.Somanuals.com. All Manuals Search And Download.

6. EXPLODE VIEW AND PARTS LIST

1. Expoloded views

SPAIN DESPA (DAEWOO,FR-330)

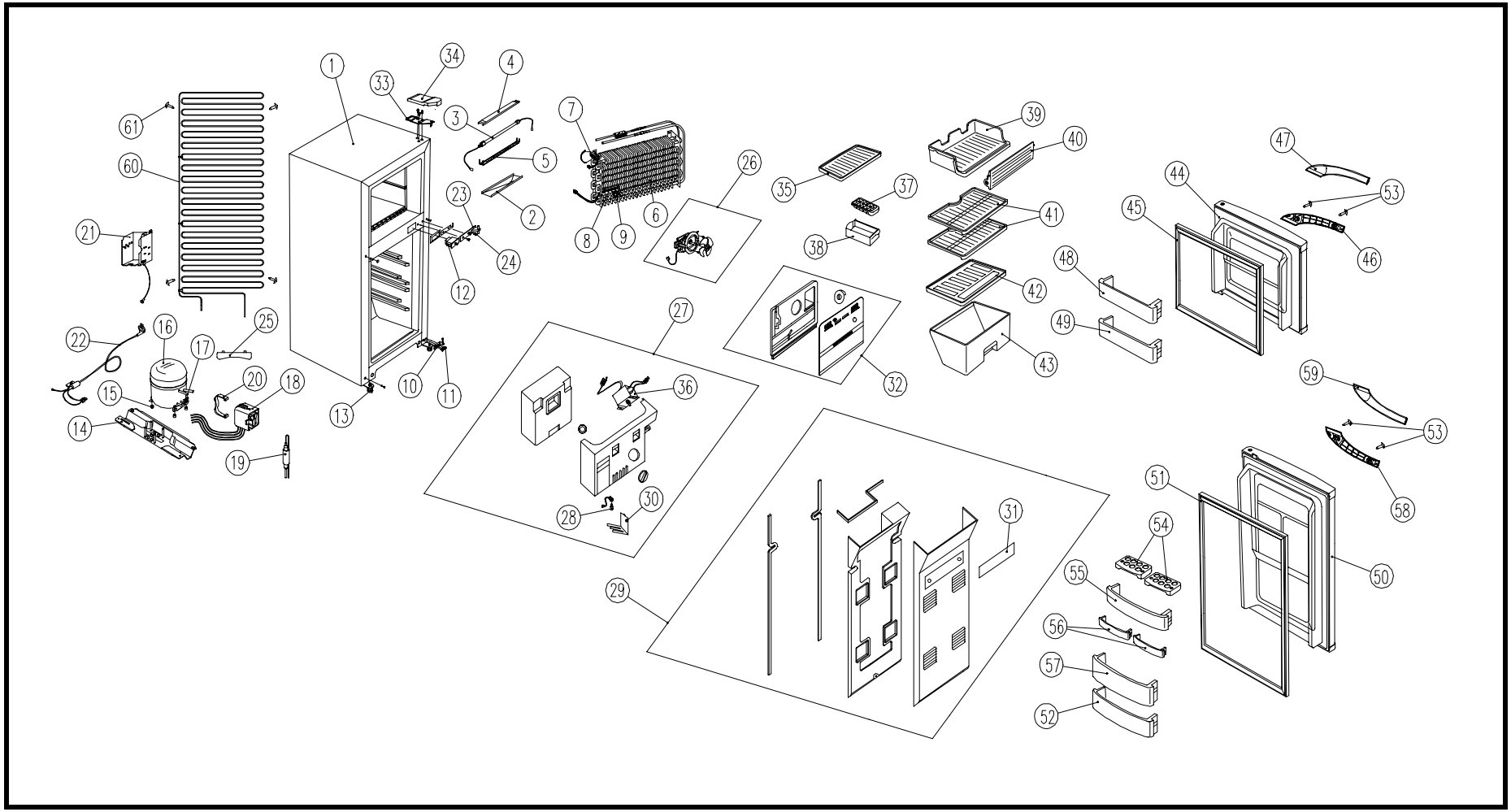

Download from Www.Somanuals.com. All Manuals Search And Download.

✔ **Caution**: In this Service Manual, some parts can be changed for improving, their performance without notice in the parts list. So, if you need the latest parts information, please refer to PPL(Parts Price List) in Service information Center(http://svc.dwe.co.kr)

7. PARTS LIST

SPAIN DESPA (DAEWOO , FR-330)

NO	PART CODE	PART NAME	DESCRIPTION	Q'TY	REMARK
1	-	ASS'Y CAB URT	HCFC-141B	1	
2	4019R54111	GUIDE DRN	AL	1	
3	3012800501	HEATER GLAS AS	150W	1	
4	4019R73571	COVER DEFR HTR *T	GALVANIED	1	
5	4019R73581	COVER DEFR HTR *U	GALVANIED	1	
6	4019R03208	EVAPPORATOR AS		1	NO ACCUM
7	3018100603	SWITCH BIMTL AS	110V,220V	1	
8	3017200202	FUSE TEMP AS		1	
9	4017Z90590	FIXTURE FUSE TEMP	PP	1	
10	3012906701	HINGE *U AS	P/O T3.2 ZN-COATING	1	
11	3016000600	SPECIAL BOLT	M6 X 20	3	
12	3011721300	SWITCH DR AS	1 BUTTON	1	
13	3012101300	ADJ FOOT AS		2	
14	3010302311	BASE COMP AS		1	
15	3010100201	ABSORBER COMP	NR H=40	4	
16	3956125S50	COMPRESSOR	HPL25YH-5 , 240/50	1	
17	4019H09030	SPECIAL WASHER	SWRH	4	
18	3018101470	SWITCH P RELAY AS	213NHBYY, S330	1	
19	3016801112	DRYER AS	HCFC 15G	1	
20	3816100100	RELAY BAND	SK-5, T0.7, ZN-3-A	1	
21	3010519020	BOX POWER AS	R/C 400VAC/5MF	1	
22	3011316700	POWER CORD AS	CP-2PIN , EUROP	1	
23	3012906300	HINGE *M AS		1	
24	3016004000	SPECIAL BOLT	M6XL10 SWCH22A	2	
25	3011161200	CASE VAPORI	PP	1	
26	3010005900	FAN MOTOR ASS	2311DW18AC, 240/50	1	
27	3010530411	ASSY R CONTL BOX	220-240V/50HZ	1	
28	3013600020	LAMP AS	240V/15W	1	
29	3010008502	DUCT M/F AS		1	
30	4017Z87570	SHADE R	HC-2	1	
31	4010C75252	LABEL DUCT	PC	1	
32	3018913600	LOUVER F AS		1	
33	3012914500	HINGE *T AS		1	
34	3014558300	COVER *T HI	PP	1	
35	3017800305	SHELF F	GPPS	1	
36	3018301301	THERMOSTAT	PFN-175D-01	1	
37	4010G56012	CASE ICING	PP(J-360)	1	
38	4017Z99112	CASE ICE	HC-2	1	
39	4019R30133	CASE CHILD	GPPS	1	
40	4019R30143	DOOR CHILD	GPPS	1	
41	4010R55212	SHELF R	GPPS	2	
42	4019R30824	COVER V/CASE	GPPS	1	
43	4019R30812	CASE VEGTB	GPPS	1	
44	-	ASSY F DOOR URT	HCFC-141B	1	
45	3012309910	GASKET F DR AS	PVC-S	1	

Download from Www.Somanuals.com. All Manuals Search And Download.

NO	PART CODE	PART NAME	DESCRIPTION	Q'TY	REMARK
46	3012624000	HANDLE F A	ABS	1	A TYPE
47	3011610810	DECO F HNDL AS		1	A TYPE
48	3019015700	POCKET F *T	GPPS	1	
49	3019015800	POCKET F *U	GPPS	1	
50	-	ASSY R DOOR URT	HCFC-141B	1	
51	3012310010	GASKET R DR AS	PVC-S	1	
52	3019016200	POCKET SM	GPPS	1	
53	7002501611	SCREW MACHINE	TRS 5X16 MFZN	4	
54	3011165700	CASE EGG	GPPS	2	
55	3019015900	POCKET EGG	GPPS	1	
56	3019016000	POCKET MULT	GPPS	2	
57	3019016100	POCKET BOTL	GPPS	1	
58	3012624200	HANDLE R A	ABS	1	A TYPE
59	3011611110	DECO F HNDL AS		1	A TYPE
60	3014443500	PIPE WI-CON AS	FR-330	1	
61	7112401211	SCREW TAPPING	T1 TRS 4X12 MFZN	4	

Download from Www.Somanuals.com. All Manuals Search And Download.

Free Manuals Download Website

http://myh66.com

http://usermanuals.us

http://www.somanuals.com

http://www.4manuals.cc

http://www.manual-lib.com

http://www.404manual.com

http://www.luxmanual.com

http://aubethermostatmanual.com

Golf course search by state

http://golfingnear.com

Email search by domain

http://emailbydomain.com

Auto manuals search

http://auto.somanuals.com

TV manuals search

http://tv.somanuals.com