INSTRUCTION MANUAL

COMMERCIAL GRADE KEGERATOR

MODEL：XCK-2448/XCK-2460/XCK-2472



BEFORE USE, PLEASE READ AND FOLLOW ALL SAFETY RULES AND OPERATING INSTRUCTIONS.

Kegco has a policy of continuous improvement on its products and
reserves the right to change materials and specifications without notice

KEGCO

8520 Miralani Dr., San Diego, CA 92126

Table of Contents

Diagram and Description 3

Safety Tips 4

Installation Instructions 5

Setting Temperature 6

Keg Configuration 7

Care and Maintenance 8

Troubleshooting 9

Technical Specifications 10

Warranty Information 11

Diagram and Description

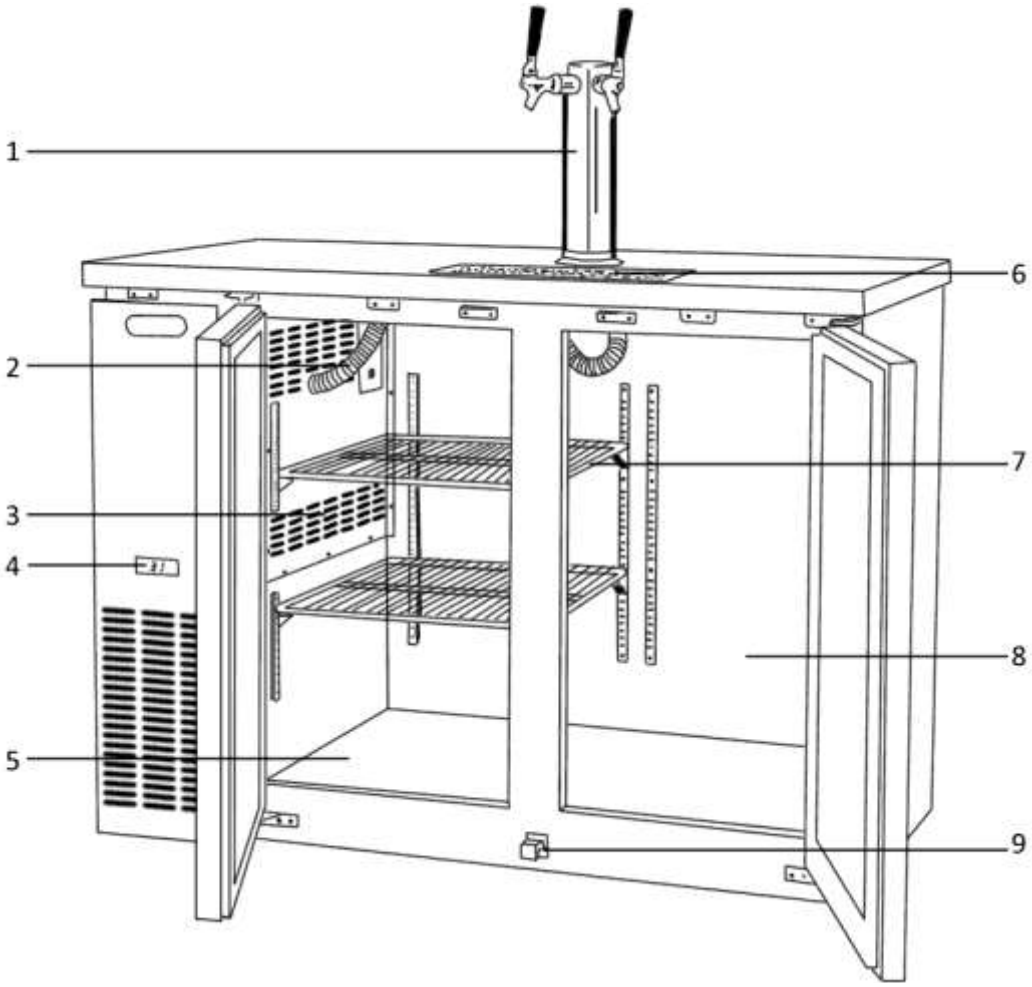

1. Draft Tower
2. Blower Hose for Air-Cooled Beer Tower
3. Heavy-Duty Evaporator Fan
4. Digital Temperature Display and Controls
5. Shock Reducing Rubber Floor Mat
6. Drip Tray
7. Adjustable Shelves
8. Stainless Steel Interior
9. Drip Tray Drain

Safety Tips

Before using this appliance, it must be properly positioned and installed as described in this manual, so please read the manual carefully. To reduce the risk of fire, electrical shock or injury when using the appliance, follow these basic precautions. Failure to heed these safety requirements may result in severe personal injury or death.

⚠ DANGER ⚠

- Plug into a grounded 3-prong outlet. Do not under any circumstances cut or remove the third ground prong from the power cord supplied, do not use an adapter, and do not use an extension cord.
- It is recommended that a separate circuit, serving only your appliance be used. Do not use outlets that can be turned off by a switch or pull chain.
- Never clean appliance parts with flammable fluids and do not store or use gasoline or other flammable vapors and liquids in the vicinity of this or any other appliance. The fumes can create a fire hazard or explosion.
- Unplug the appliance or disconnect power before cleaning or servicing. Failure to do so can result in electrical shock or death.
- Do not attempt to repair or replace any part of your appliance unless it is specifically recommended in this manual. All other servicing should be referred to a qualified technician.

⚠ WARNING ⚠

- Use two or more people to move and install appliance. Failure to do so can result in back or other injury.
- To ensure proper ventilation for your appliance, the front of the unit must be completely unobstructed. Choose a well-ventilated area that is protected from the elements, such as wind, rain, water spray or drips.
- The appliance should not be located next to ovens, grills or other high heat sources or in areas of extreme cold.
- The appliance must be installed in accordance with state and local codes. A standard electrical supply (115 V AC only, 60 Hz), properly grounded in accordance with the National Electrical Code and local ordinances is required.
- Do not kink or pinch the power supply cord of appliance.
- The fuse (or circuit breaker) size should be 15 amperes.
- It is important for the appliance to be leveled in order to work properly.
- Never allow children to operate, play with or crawl inside the appliance. Child entrapment and suffocation are not just problems of the past, junked or abandoned appliances are still dangerous. When no longer using your old appliance, take off the door and leave the shelves in place so that children may not climb inside easily.
- Do not use solvent-based cleansers or abrasives on the interior as they may damage or discolor the interior.
- Because of potential safety hazards under certain conditions, it is strongly recommended that you do not use an extension cord with this appliance. However, if you must use an extension cord, it is absolutely necessary that it be a UL/CUL-Listed, 3-wire grounding type appliance extension cord having a grounding type plug and outlet and that the electrical rating of the cord be 115 volts and at least 10 amperes.
- If the appliance is going to be used in an area that is prone to power surges/outages, it is suggested that you use a power surge protector. The surge protector that you select must have a surge block high enough to protect the appliance it is connected to. Damages due to power surges are not considered a manufacturer covered defect and will void your product warranty.
- The cord should be secured behind the appliance and not left exposed or dangling to prevent accidental injury. Never unplug the appliance by pulling the power cord. Always grip the plug firmly and pull straight out from the receptacle. Repair or replace immediately all power cords that have become frayed or otherwise damaged. Do not use a cord with cracks or abrasion damage along its length or at either end. When moving the appliance, be careful not to damage the power cord.
- Do not use this apparatus for other than its intended purpose.
- **California Proposition 65 Warning:** This product may contain a substance known to the State of California to cause cancer, birth defects or other reproductive harm.

Failure to heed these safety warnings may result in extensive product damage, serious personal injury, or death.

Installation Instructions

BEFORE USE:

- Remove the exterior and interior packaging.
- Move the unit as close to the final location as possible before removing the wooden pallet.
- To remove the pallet, use a screwdriver to remove the screws from the L-bracket connecting the unit to the pallet. Unscrew all base rail anchor brackets and place the pallet to the side. Then, carefully upright the unit.
- Before connecting the unit to the power source, let it stand upright for approximately 24 hours. This will reduce the possibility of a malfunction in the cooling system from handling during transportation.
- Clean the interior surface with lukewarm water using a soft cloth.
- This appliance is designed for freestanding use. A space of at least 3" should be allowed between the surrounding walls and the cabinet wall for air circulation.
- Place the unit on a flat, solid floor that is strong enough to support it when it is fully loaded
- When moving your refrigerator, please do not incline it more than 45 degrees.
- Locate the appliance away from direct sunlight and sources of heat (stove, heater, radiator, etc.). Direct sunlight may affect the acrylic coating and heat sources may increase electrical consumption. Extreme cold ambient temperatures may also cause the unit to perform improperly. Do not mount the draft tower remotely, as the exposed beer line will not be refrigerated, causing foam.
- Install the unit in a dry place to prevent rust from forming on the compartment body, which may affect the electrical insulation.
- Plug the kegerator into an exclusive, properly installed and grounded wall outlet. Do not under any circumstances cut or remove the third (ground) prong from the power cord. Any questions concerning power and/or electrical grounding should be directed to a certified electrician or authorized products service center.
- After plugging the appliance into a wall outlet, allow the unit to cool down for 3 to 4 hours before installing a keg in the appliance.

SEALING THE CABINET TO THE FLOOR:

This method may be used when sanitation codes require sealing the kegerator to the floor.

1. Position the Cabinet
   Allow 1 inch between the wall and the rear to assure proper ventilation
2. Level Cabinet
   The cabinet should be level side to side and front to back. Place a carpenter's level in the interior cabinet floor in four places:
   - The inside floor of the unit near the door. Level should be parallel to the front of the cabinet.
   - The inside rear of the unit near the door. Level should be parallel to the back of the cabinet.
   - The inside left and right sides. Level should be parallel to the depth of the cooler.
3. Apply Sealant
   - Draw an outline on the base of the floor
   - Raise and block the front sides of the cabinet
   - Apply a bead of NSF approved sealant to the floor half an inch inside of your drawn outline. The bead must be heavy enough to seal the entire cabinet surface when it is set down on the sealant.
   - Raise and block the rear of the cabinet.
   - Apply sealant on the floor as outline above.
   - Examine to see that the cabinet is sealed to the floor around the entire perimeter.

SHELF INSTALLATION:

1. Hook the shelf clips onto the clip hanger
2. Place the shelves on the shelf clips, making sure that all corners are seated properly.



INSTALLING THE AIR HOSE:



1. Insert the air hose into the beer tower and secure the beer tower to the cabinet with the gasket under the beer tower.



2. In order to keep the beer faucet cold, make sure that the air hose closes to the top of the beer tower at all times.

Setting the Temperature

The Kegco Kegerator is able to maintain the proper dispensing temperature for beer, provided it is installed correctly in the proper environment. Avoid opening and closing the door of the kegerator too often to ensure a consistent temperature inside the unit. Beer is dispensed best between 32°F - 38°F (1°C - 3.3°C). If it is kept below or above that range, you may experience foam issues.

To set the desired temperature, press **SET** for 1 second or until the value starts to flash, then adjust the value using the **UP** or **DOWN** button. Press **SET** again to confirm the new value. For rapid cooldown of warm kegs, you can set a continuous cycle by holding the **UP** and **DOWN** buttons together for more than 3 seconds.



To turn the unit **ON/OFF**, press **UP** for more than 3 seconds. The control and defrost algorithms are now disables and the display will read **OFF** alternating with the current temperature inside the unit as measured by the temp sensor. To engage the manual defrost, hold the **DOWN** button for more than 3 seconds. It will still show the current temperature.

CAUTION: Leaving the temperature control on the coldest setting may cause the evaporator coil to freeze and ice up. This will eventually result in a warmer cabinet temperature.

If you are going on vacation, you may leave the kegerator operating during vacations of less than three weeks. If the appliance will not be used for several months, you should remove all items and turn off the appliance. Clean and dry the interior thoroughly. To prevent mold growth, leave the door open slightly, blocking it open if necessary.

Keg Configuration

Kegco XCK-24 Series Kegerators are large enough to fit multiple full-size kegs or a number of smaller kegs, giving you the flexibility to serve a combination of many different beers from one kegerator. Some configurations require mounting the CO2 tank outside the cabinet, which is explained on the next page.

XCK-2448

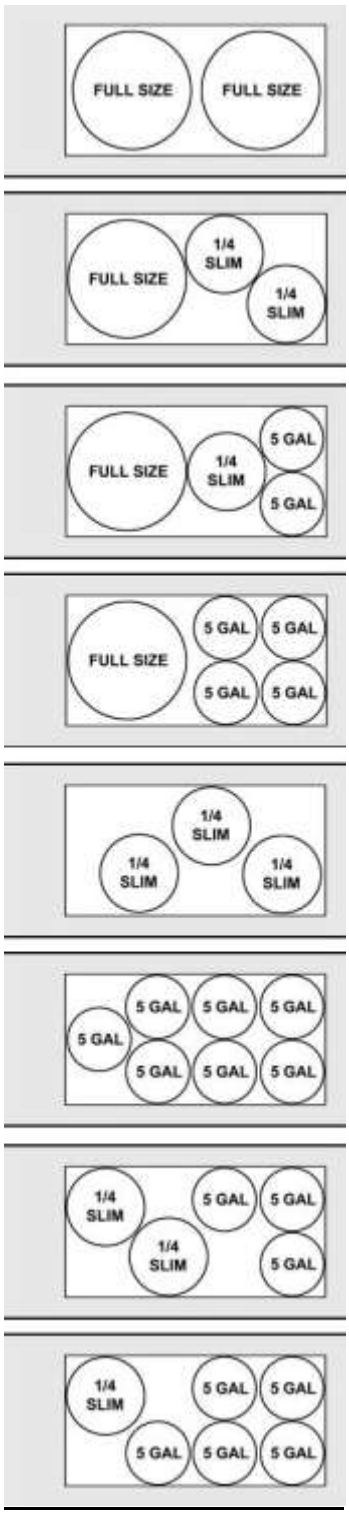

XCK-2460

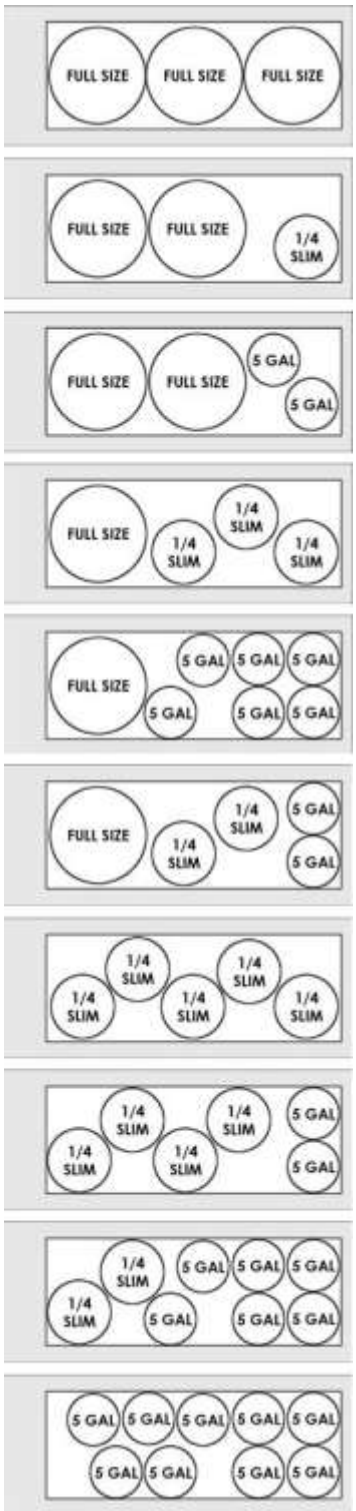

XCK-2472

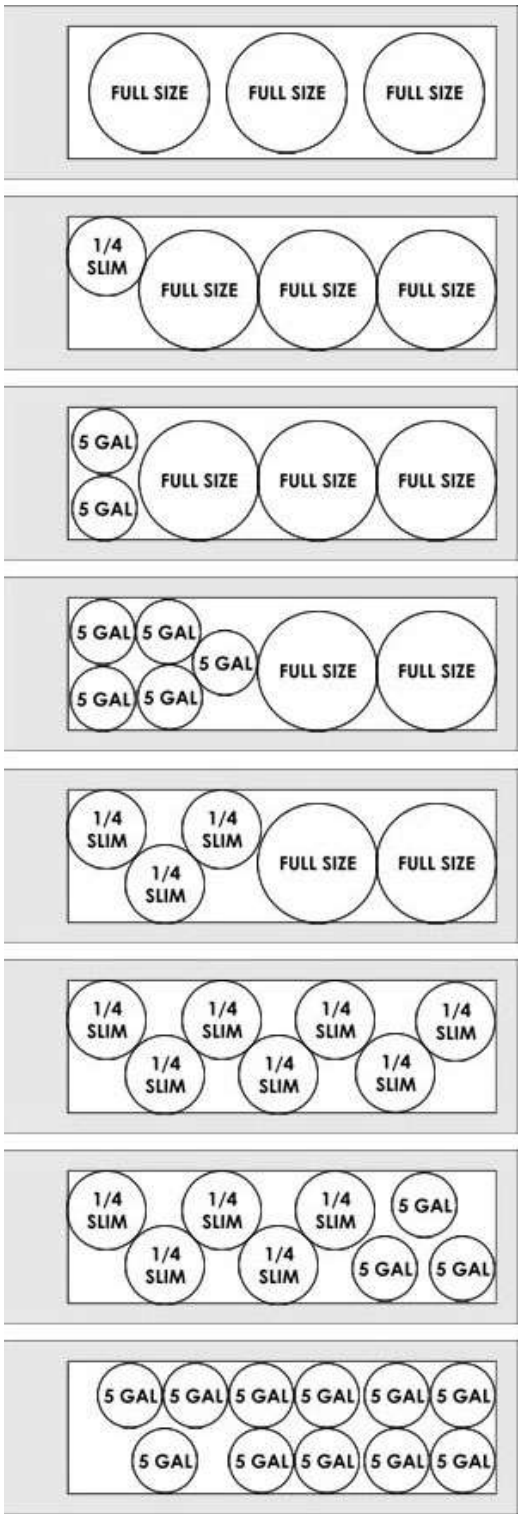

EXTERNAL CO2 TANK MOUNT



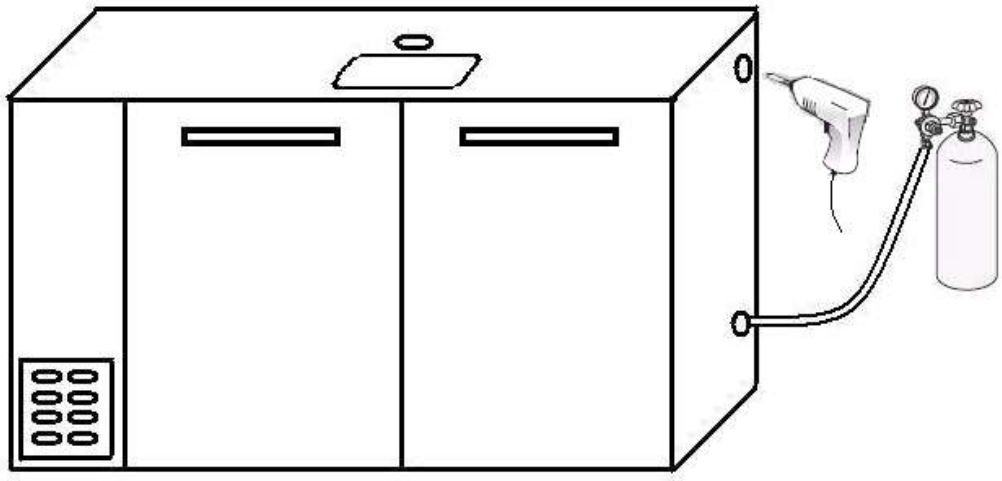

1. Drill and bore a hole through the wall in either of the places where the foam insulation is exposed.
2. Insert the CO2 line through the hole.
3. Seal the hole around the CO2 line with silicone sealer to prevent cold air leakage.

Care and Maintenance

Cleaning your kegerator:

- Turn off the power, unplug the appliance, and remove all items including the dispense kit.
- Wash the inside surfaces with warm water and baking soda solution. The solution should be about 2 tablespoons of baking soda to a quart of water.
- Wring excess water out of the sponge or cloth when cleaning area of the controls, or any electrical parts.
- Wash the outside cabinet with warm water and mild liquid detergent. Rinse and wipe dry with a clean soft cloth.
- Do not use steel wool or a steel brush, caustic soap, abrasive cleaners or bleach on the stainless steel. These will damage the stainless steel or contaminate the stainless steel with steel particles and rusting may occur.
- Wash door gaskets on a regular basis, preferably weekly. Simply remove the door gasket from the frame of the door, soak in warm water and soap for 30 minutes, dry with a soft cloth, and replace.
- Check door gaskets for a proper seal after they are replaced.
- Periodically remove the shelves and pilasters from the unit and clean them with mild soap and warm water. To remove the pilasters, first remove the shelves and shelf brackets. Then, simply lift the pilaster up and out.
- It is recommended to clean the unit completely inside and out yearly to maximize the longevity of the product.

Cleaning the condenser coil:

- For efficient operation, it is important that the condenser surface be kept free of dust, dirt, and lint. We recommend clearing the condenser coil and fins at least once per month.
- Turn off the power and unplug the appliance.
- Clean with a commercial condenser coil cleaner, available from any kitchen equipment retailer. Brush the condenser fins from top to bottom, not side to side.
- After cleaning, straighten any bent condenser fins with a fin comb.

Cleaning the fan blade and motor:

- If necessary, clean the fan blades and motor with a soft cloth
- If it is necessary to wash the fan blades, cover the fan motor to prevent moisture damage.

Troubleshooting

There are many common issues you may experience with your kegerator that can be solved very easily, without the need of a service call. Try the tips below to troubleshoot your unit should you experience any problems:

PROBLEM	POSSIBLE CAUSE
Kegerator does not operate	Not plugged in or the appliance is turned off. The circuit breaker tripped or a fuse has blown out. The thermostat is set too high. The kegerator is in defrost cycle.
Kegerator is not cold enough	Check the temperature control setting. The circuit breaker tripped or a fuse has blown out. External environment may require a higher setting. There is too much warm product in the kegerator. Air flow is being blocked. The door is opened too often. The door is not closed completely. The door gasket is not sealing properly. The condenser coil is dirty. The evaporator coil has iced over.
Condensing unit runs for long periods of time	There is too much warm product in the kegerator. The door is opened too often. The door is not closed completely. The door gasket is not sealing properly. The condenser coil is dirty. The evaporator coil has iced over.
The light does not work	Not plugged in. The circuit breaker tripped or a fuse has blown. The light bulb has burned out.
Vibrations	Check to assure that the Kegerator is on a level surface.
The door will not close properly	The kegerator is not on a level surface. The gasket is dirty. The shelves are out of position.

Technical Specifications

	XCK-2448	XCK-2460	XCK-2472
Keg Capacity	Two Full-Size Kegs **or** Two Pony Kegs **or** Three Quarter Slims **or** Seven 5 Gallon Kegs	Three Full-Size Kegs **or** Three Pony Kegs **or** Five Quarter Slims **or** Nine 5 Gallon Kegs	Two Full-Size Kegs **or** Two Pony Kegs **or** Three Quarter Slims **or** Eleven 5 Gallon Kegs
Dimensions	36.2" H x 48.8" W x 24.5" D	36.2" H x 60.8" W x 24.5" D	36.2" H x 72" W x 24.5" D
Weight	315 lbs.	380 lbs.	410 lbs.
Voltage / Frequency	115v / 60 Hz	115v / 60 Hz	115v / 60 Hz
Running Amps	6.4 A	6.4 A	6.4 A
Operating Temperature	31°F - 41°F	31°F - 41°F	31°F - 41°F

Warranty Information

WHAT IS COVERED LIMITED ONE-YEAR WARRANTY:

For one year from the date of purchase by the original owner, Kegco will, at its option, repair or replace any part of the unit, which proves to be defective in material or workmanship under normal use. During this period Kegco will provide all parts and labor necessary to correct such defects free of charge, so long as the unit has been installed and operated in accordance with the written instructions in this manual. Kegco will provide you with a reasonably similar replacement product that is either new or factory refurbished. In rental or commercial use, the warranty period is 90 days. All Kegco Appliances of 3.5 cubic feet capacity or less must be brought/sent to the appliance service shop for repair.

LIMITED SECOND THROUGH FIFTH YEAR WARRANTY:

For the second through the fifth year from date of original purchase, Kegco Products will provide a replacement compressor free of charge due to a failure. You are responsible for the service labor and freight charges. In rental or commercial use, the limited compressor warranty is one year and nine months. Cost to move the appliance to the servicers' shop and back to the user's home, as may be required, are the user's responsibility.

WHAT IS NOT COVERED:

- Content losses of food or other, due to spoilage.
- Incidental or consequential damages.
- Parts and labor costs for the following will not be considered as warranty:
    - Door springs, and/or frames.
    - Inner door panels, door rails and/or door supports.
    - Light bulbs and/or plastic housing.
    - Plastic cabinet liners.
    - Punctured evaporator that voids the warranty on the complete sealed system.
    - Repairs performed by unauthorized servicers.
    - Shipping and handling costs associated with the replacement of the unit.
    - Service calls that do not involve defects in material or workmanship such as customer education, door reversal, or proper installation.
    - Surcharges including, but not limited to, any after hour, weekend, or holiday service calls, tolls, ferry trip charges, or mileage expense for service call to remote areas, including the State of Alaska.
    - Service calls that are related to external problems, such as abuse, misuse, inadequate electrical power, accidents, fire, floods, or acts of God.
    - Replacement of house fuses or resetting circuit breakers.
- Failure of the product if it is used for other than its intended purpose.
- This warranty does not apply outside the Continental USA.

SERVICE FOR YOUR KEGERATOR:
With the purchase of your Kegco appliance, you can have the confidence that if you ever need additional information or assistance, the Kegco Customer Service team will be here for you. Whatever your questions are about our products, help is available. Just call us toll-free.

KEGCO PRODUCT CUSTOMER SERVICES:
Product Information, Part Orders and In-Home Repair Service: **888-980-4810**