VISSANI™

Item # 1009025767
Model # VXK320BSSE

USE AND CARE GUIDE

18 IN. 1/6 BARREL BEER KEG DISPENSER WITH ELECTRONIC CONTROL IN STAINLESS STEEL

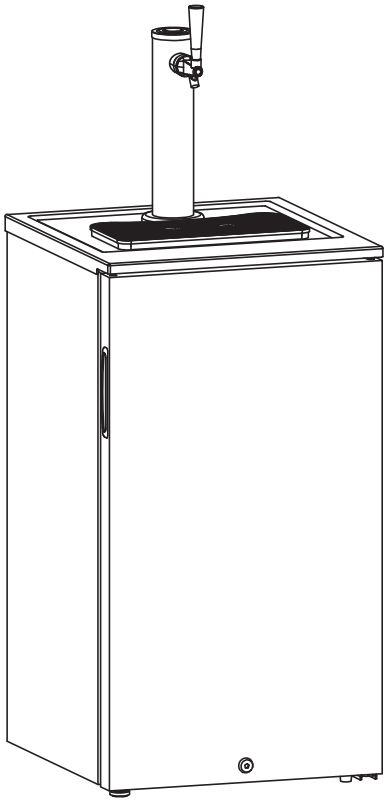

Questions, problems, missing parts? Before returning to the store,
call Vissani Customer Service
8 a.m. – 7 p.m., EST, Monday-Friday, 9 a.m. – 6 p.m., EST, Saturday

1-855-847-7264

HOMEDEPOT.COM

THANK YOU

We appreciate the trust and confidence you have placed in Vissani through the purchase of this kegerator. We strive to continually create quality products designed to enhance your home. Visit us online to see our full line of products available for your home improvement needs. Thank you for choosing Vissani!

Table of Contents

Table of Contents.....2
Safety Information.....2-3
Warranty.....4
What is covered.....4
What is not covered.....4
Pre-operation.....5
Before you begin.....5
Setting up the appliance.....5
Tools Required.....5
Package contents.....6
Installation.....7-9
Operation.....10
Maintenance.....11
Care and Cleaning.....11
Troubleshooting.....12

Safety Information

- This appliance is not intended for use by persons (including children) whose physical, sensory or mental capabilities may be different or reduced, or who lack experience or knowledge, unless such persons receive supervision or training to operate the appliance by a person responsible for their safety.
- This appliance is intended to be used in household and similar applications such as:
  - Staff kitchen areas in shops, offices and other working environments;
  - Farmhouses and by clients in hotels, motels and other residential type environments;
  - Bed and breakfast type environments;
  - Catering and similar non-retail applications.
- This appliance must be grounded. Grounding reduces the risk of electrical shock by providing an escape wire for the electrical current. This appliance has a cord that has a grounding wire with a 3-prong plug. The power cord must be plugged into an outlet that is properly grounded. If the outlet is a 2-prong wall outlet, it must be replaced with a properly grounded 3-prong wall outlet. The serial rating plate indicates the voltage and frequency the appliance is designed for.

WARNING:
- Keep ventilation openings, in the appliance enclosure or in the built-in structure, clear of obstruction.
- Do not use mechanical devices or other means to accelerate the defrosting process, other than those recommended by the manufacturer.
- Do not damage the refrigerant circuit.
- Do not use electrical appliances inside the food storage compartments of the appliance, unless they are of the type recommended by the manufacturer.
- Improper use of the grounding plug can result in a risk of electric shock. Consult a qualified electrician or service agent if the grounding instructions are not completely understood, or if doubt exists as to whether the appliance is properly grounded.

DANGER:
- Risk of fire or explosion. Flammable refrigerant used. Do not puncture refrigerant tubing.
- Do not use mechanical devices to defrost refrigerator.
- Ensure that servicing is done by factory authorized service personnel, to minimize product damage or safety issues.
- If the power supply cord is damaged, it must be replaced by the manufacturer, its service agent or similar qualified person in order to avoid hazard.
- Consult repair manual or owner's guide before attempting to service this product. All safety precautions must be followed.
- Dispose of properly in accordance with federal or local regulations.
- Follow handling instructions carefully.
- Do not store explosive substances such as aerosol cans with a flammable propellant in this appliance.
- Risk of child entrapment. Before throwing away an old appliance:
  - Remove the door or lid.
  - Leave shelves in place so that children may not easily climb inside.
  - Do not add a lock to the door or lid. This can cause child entrapment and harm.

CAUTION: Children should be supervised to ensure that they do not play with the appliance.

NOTE: Do not connect your appliance to extension cords or together with another appliance in the same wall outlet. Do not splice the power cord. Do not under any circumstances cut or remove the third ground prong from the power cord. Do not use extension cords or ungrounded (two prongs) adapters.

Safety Information (continued)

WARNING: CO2 can be dangerous!

CO2 cylinders, when charged, contain high-pressure compressed gas which can be hazardous if not handled properly. Read and understand the following procedures for CO2 cylinders before installation.

- Always check the D.O.T. (Department of Transportation) as well as the T.C. (Transport Canada) test date located on the neck of the cylinder before installation. If the date is older than five (5) years, do not use! Return the gas cylinder to a gas supplier for recertification (service charges may be applicable).
- Always connect a CO2 gas cylinder to a regulator. Failure to do so could result in an explosion which can possibly result in death or injury when the cylinder valve is opened.
- Always follow correct procedures when cylinders are changed as per local codes.
- Always secure a CO2 gas cylinder in an “upright” position.
- Always keep a CO2 gas cylinder away from heat. Store extra cylinders in a cool place (preferably 70°F/21°C). Securely fasten with a chain in an upright position when storing.
- Always ventilate and leave the area immediately after any leakage of CO2.
- Never connect a CO2 gas cylinder directly to a beer keg.
- Never drop or throw a CO2 cylinder.
- Never connect a keg without at least one safety pressure release. There are two safety mechanisms in the pressure system:
  - One at or on the CO2 regulator.
  - One at or on the product container coupler in the pressure gas line.

NOTE: The regulator and keg coupler supplied with this appliance are inclusive of such safety mechanisms.

WARNING: If it becomes difficult to breathe and/or your head starts to ache, abnormal concentrations of carbon dioxide (CO2) may be present in the area. Close the main valve on the CO2 cylinder, ventilate and leave the room immediately!

- Beer is easily available with this kegerator; however, it is not intended to be available to people under the legal age to consume beer. Vissani does not assume liability for the unlawful use or consumption of the beer.
- PLEASE DRINK RESPONSIBLY AND PLEASE DON’T DRINK AND DRIVE!

WARNING: CO2 gas can be dangerous. CO2 cylinders contain high-pressure compressed gas which can be hazardous if not handled properly. Make sure to read and understand all safety procedures for CO2 cylinders before installation.

Warranty

WHAT IS COVERED

This quality product is warranted to be free from manufacturer's defects in material and workmanship, provided that the unit is used under the normal operating conditions intended by the manufacturer.This warranty is available only to the person to whom the unit was originally sold by The Home Depot and is non-transferable.

- Plastic parts are warranted for thirty (30) days from the date of purchase, with no extensions provided.
- During the first twelve (12) months, any functional parts of this product found to be defective, will be repaired or replaced, at warrantor's option, at no charge to the original purchaser.
- To obtain service, contact The Home Depot where the unit was purchased. If service is performed on the unit by anyone other than an authorized service depot, all obligations of The Home Depot under this warranty shall be void.
- It is the responsibility of the purchaser to transport the appliance to the nearest authorized service depot.
- Transportation charges to and from the service location are not protected by this warranty and are the responsibility of the purchaser.
- Nothing within this warranty shall imply that The Home Depot will be responsible or liable for any spoilage or damage to food or other contents of this appliance, where due to any defect of the appliance, or its use, whether proper or improper.

WHAT IS NOT COVERED

No warranty or insurance herein contained or set out shall apply when damage or repair is caused by any of the following:

1) Power failure.

2) Damage in transit or when moving the appliance.

3) Improper power supply such as low voltage, defective house wiring or inadequate fuses.

4) Accident, alteration, abuse or misuse of the appliance such as inadequate air circulation in the room or abnormal operating conditions (ie. extremely high or low room temperature).

5) Use for commercial or industrial purposes (ie. If the appliance is not installed in a domestic residence).

6) Fire, water damage, theft, war, riot, hostility, acts of God such as hurricanes, floods etc.

7) Service calls resulting in customer education.

8) Improper installation (ie. building-in of a free standing appliance or using an appliance outdoors that is not approved for outdoor application, including but not limited to: garages, patios, porches or anywhere that is not properly insulated or climate controlled).

Proof of purchase date will be required for warranty claims; retain bills of sale. In the event that warranty service is required, present the proof of purchase to our authorized service depot.

Contact the Customer Service Team at 1-855-847-7264 or visit www.homedepot.com.

Pre-operation

BEFORE YOU BEGIN

IMPORTANT: If the appliance is placed on its back or side for any length of time during this process, it must be allowed to remain upright for 24 hours before plugging it in to avoid damage to the internal components.

Read instructions carefully before operating.

SETTING UP THE APPLIANCE

- Before using your kegerator.
  The kegerator should be installed in accordance with local electrical code requirements. The kegerator should also be placed in a location that is strong enough to support its total weight, keeping in mind that it will weigh substantially more when fully loaded than when empty. Before you plug the kegerator into a power supply, be sure to let it stand upright for at least 24 hours to allow the compressor's oils to settle.
- Finding a suitable location.
  To ensure the kegerator will last, install it in a location where there is proper air circulation and electrical connections. Keep the refrigerator away from heat and direct sunlight. This refrigerator is designed for indoor use only and should not be used outdoors. It should not be placed in a built-in or recessed area as it is designed to be a freestanding kegerator.
- The following dimensions are the recommended clearances around the beer dispenser.
  Sides: 2 to 3 in. (76 mm)
  Back: 4 to 5 in. (127 mm)
- Providing a proper power supply.
  Before you move your kegerator into its final location, it is important to make sure you have the proper electrical connection:
  - A standard electrical supply (115 V, 60Hz), properly grounded in accordance with the National Electrical Code and local codes and ordinances, is required.
  - It is recommended that a separate circuit, serving only your kegerator, be provided. Use receptacles that cannot be turned off by a switch or pull chain. The fuse (or circuit breaker) size should be 15 Amps.

WARNING: Use two more people to move and install the kegerator. Failure to do so can result in back or other injury. Carefully remove the packaging materials. Remove any shipping tape and glue from your kegerator before using. Do not use sharp instruments, rubbing alcohol, flammable fluids, or abrasive cleaners to remove tape or glue. These products can damage the surface of your kegerator.

WARNING:
- Plug into a grounded 3-prong outlet.
- Never remove the grounding prong from the plug.
- Never use an adapter to bypass the grounding prong.
- DO NOT use an extension cord.
- Failure to follow these instructions can result in fire, electrical shock, or death.

IMPORTANT: Do not remove any safety, warning, or product information labels from your kegerator.

TOOLS REQUIRED



Flat head screwdriver



Phillips head screwdriver



Wrench

Pre-operation (continued)

PACKAGE CONTENTS

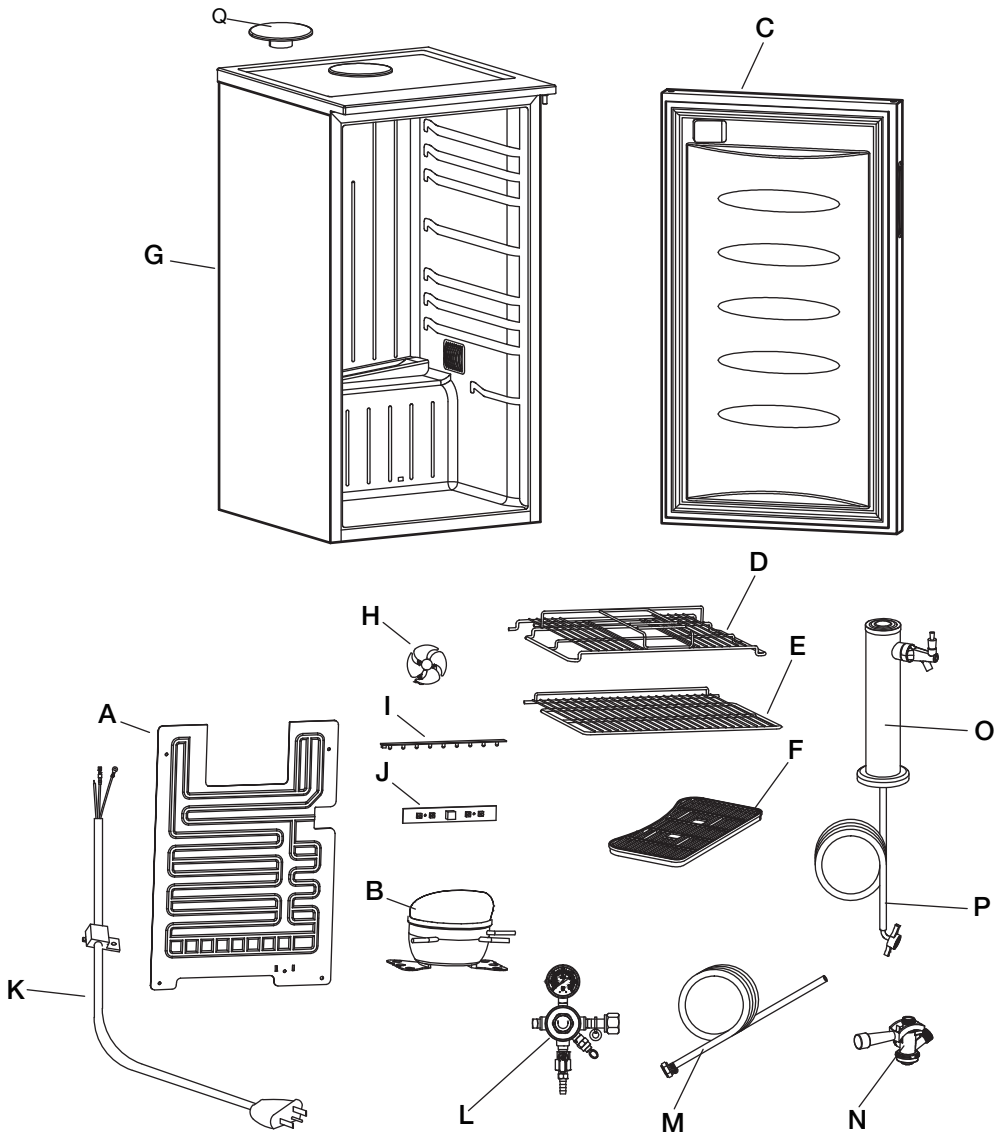

Part	Description
A	Evaporator
B	Compressor
C	Door
D	Flat shelf
E	Flat shelf (2)
F	Wine tray
G	Cabinet
H	Fan
I	LED light

Part	Description
J	Display panel
K	Power plug
L	Regulator
M	CO2 gas line
N	D-type coupler
O	Beer tower
P	Beer line
Q	Tower plug

Installation

1 Leveling the Kegerator

- ☐ It is important for the kegerator to be leveled for optimum efficiency.
- ☐ It can be raised or lowered by rotating the plastic sheaths around each of the feet on the bottom of the machine.
- ☐ If you find that the surface is not level, rotate the feet until the kegerator becomes level. You may need to make several adjustments to level it.
- ☐ If available, place a carpenter's level on top of the product to see if the kegerator is level from front to back and side to side.
- ☐ To adjust the height of the kegerator, simply turn the feet (right = lower / left = raise).

IMPORTANT: Kegerator should be level before installation.

2 Removing the Plug

- ☐ Carefully remove the tower plug (Q) located on the top of the unit by opening the cabinet (G), and with your hand.
- ☐ Push the tower plug (Q) through the top of the cabinet (G) from the inside.
- ☐ Use a flat head screwdriver as a prying tool if necessary.

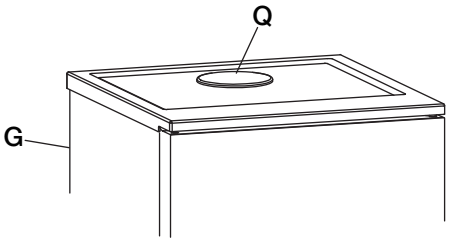

3 Mounting the Tower

- ☐ Place the black rubber tower gasket (4) flat on the top of the cabinet (G) and line up the pre-drilled holes.
- ☐ Unbox the beer tower (O) and unravel the beer line hose (P) from the bottom. Feed the clear beer line (P) through the large opening at the top of the cabinet (G).
- ☐ Place the beer tower (O) on top of the unit and align the screw holes at the bottom of the beer tower (O) to the pre-drilled holes located on the top of the cabinet (G). Secure the tower (O) by attaching the four tower screws (3) with a phillips head screwdriver to the top of the cabinet (G).
- ☐ The faucet connection for the tower (O) should now face the front of the cabinet (G).
- ☐ If the faucet (2) is not facing the front of the cabinet (G), remove it and reinstall it to the proper position.
- ☐ Screw the black faucet handle (1) onto the faucet (2).

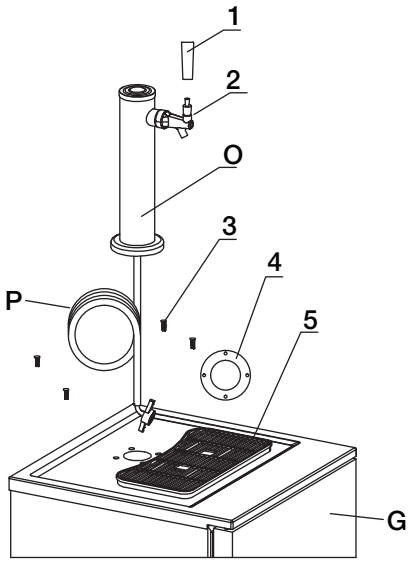

4 Installing the CO2 Regulator and Tank

- ☐ Feed a hose clamp (10) over the end of the CO2 gas line (M).
- ☐ Attach that end to the gas line connector (7) on the CO2 regulator (L).
- ☐ Tighten the clamp to prevent leaks. Leave about ½ inch between the top of the clamp and the end of the hose.
- ☐ Attach the CO2 regulator (L) to the CO2 tank (9) by screwing the regulator nut onto the CO2 tank (9) valve and tightening with an adjustable wrench.

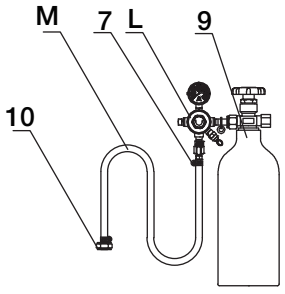

Installation (continued)

5 Installing the Keg Coupler

- ☐ Remove the rubber protective cap(14) located on the side of the D-type coupler (N).
- ☐ Secure the hex nut at the end of the CO2 gas line (M) to the side of the D-type coupler (N).Use a wrench to tighten hex nut to the coupler.
- ☐ Do not remove or discard the gray check valve located on the side of the coupler. This part prevents liquid from going into the regulator and also provides a seal between the air line and coupler.
- ☐ Remove the rubber cap (13) from the top of the D-type coupler (N). Place the neoprene washer (12) located under the rubber cap to the top of the coupler (N).
- ☐ Take the hex nut from the end of the beer line (P) and screw it onto the top of the keg coupler (N) so that the neoprene washer is between it.
- ☐ To connect the D-type coupler (N) to the keg (11), first make sure the black pull handle of the D-type coupler (N) is in the up position (45° angle). Insert the D-type coupler (N) into the valve on top of the keg and turn clockwise until it stops about 90° to lock the coupler into place.
- ☐ Pull the tap handle out (away from the D-type coupler (N) and push down until it locks into position. Listen for the "click" of the pull handle when it shifts into the final downward position. The keg is now tapped.

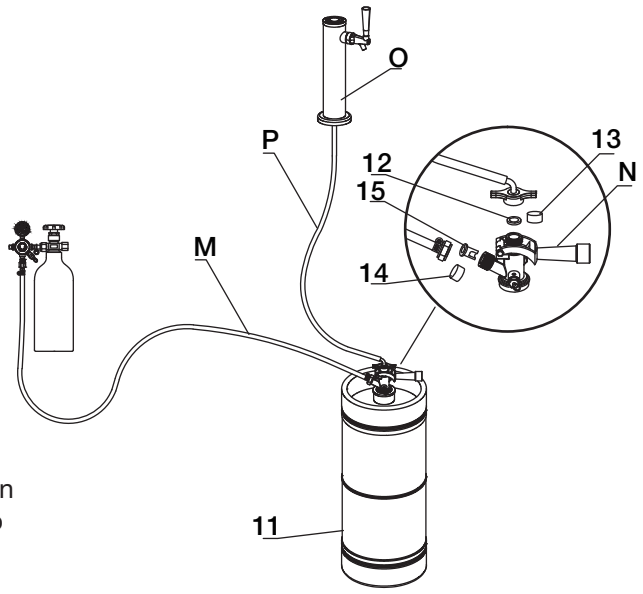

Barrel	Liters	Gallons	Ounces	12 oz. Glasses
1/6	20	5.2	661	55

- ☐ Suitable CO2 tank size (lb): 2.5 or 5

6 Attaching the CO2 Tank

- ☐ Place the CO2 tank inside the kegerator for a cleaner look.
- ☐ Attach the tank through the retainer and secure it with the provided bolt and nut.
- ☐ Position the tank so you can read the gauge and have easy access to the shut-off valve.

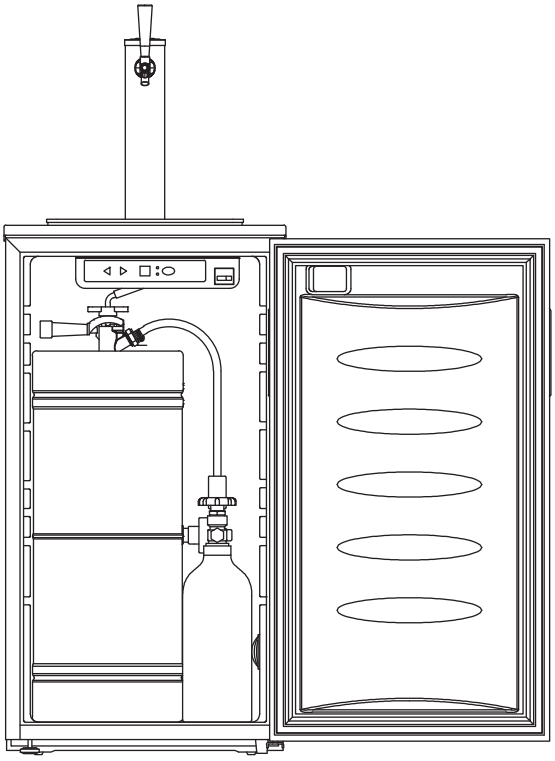

Installation (continued)

7 Adjusting the CO2 Regulator

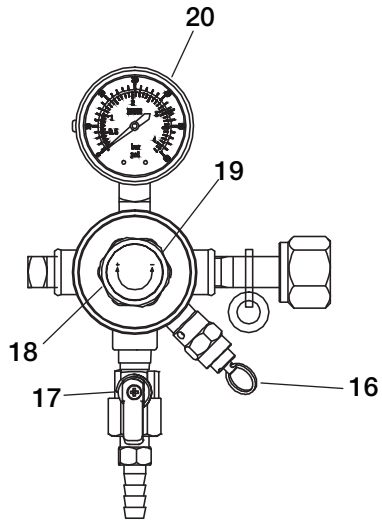

- □ Make sure that the shut-off valve (17) is closed (sideways = closed, down = open), then slowly turn the main valve on the CO2 tank counterclockwise until it is fully open.
- □ Release the adjustment lock nut (18), behind the regulator adjustment knob (19), by turning it counterclockwise about 5-7 turns.
- □ Turn the regulator adjustment knob (19) clockwise to increase pressure. The needle on the gauge (20) starts to climb. Set the gauge to 10-12 PSI.

> **NOTE:** When adjusting pressure from a high pressure to a lower pressure, you will need to release the higher pressure by pulling the manual pressure release valve ring (16) located on the bottom right of the regulator.

- □ Open the shut-off valve (17) to allow gas to flow into the keg.
- □ When the tank is at the correct pressure, tighten the adjustment lock nut (18) by turning it clockwise.
- □ Allow several minutes for the keg to pressurize. The gauge (20) may show a drop in pressure while this happens. Adjust as needed.
- □ Plug the kegerator/beverage cooler into a 120V, 60Hz, 15 Amp grounded outlet.

Operation

1 Using the Temperature Control Panel

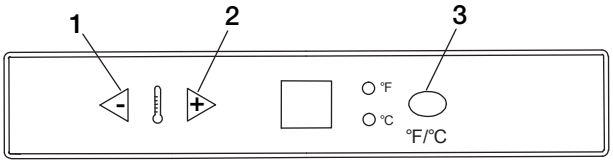

- This kegerator has digital control panel located on the top of the inside of the cabinet. Pressing the temperature buttons will make the unit colder or warmer. Press the "-" button (1) to lower the temperature by one degree. Press the "+" (2) to raise the temperature by one degree. This unit has a temperature range of 32-55° F.
- Press the F and C button (3) to change the display from °F to °C.
- The unit will run automatically once plugged in. Unplug the unit to turn it off.

NOTE: Whether your kegerator can reach a cooler temperature depends on the ambient environmental conditions.

CAUTION: If you powered off the unit, please wait at least 5 minutes before powering it back on.

2 Defrosting

- There is no need to defrost your kegerator/beverage cooler. The defrost water collects at the back of your cooler and passes through a drain outlet into a tray located above the compressor where it evaporates.

3 Preparing the Kegerator For Storage

- If the kegerator will not be used for a long time, or is to be moved to another place, it will be necessary to defrost the unit and dry the interior.
- Disconnect the unit from the power supply by removing the power plug from the wall socket.
- Leave the door open to allow for air circulation and to prevent mold, mildew and unpleasant smells.

IMPORTANT: Do not touch the power plug when your hands are wet. Never unplug the unit by pulling on the power cord.

CAUTION: Store the unit out of the reach of children. If you have children, you may want to take additional precautions such as removing the door to prevent a child from being trapped inside the unit!

Maintenance

REPLACING KEGS

- □ Turn the kegerator/beverage cooler off and disconnect power from the wall outlet.
- □ Close the main valve on the CO2 tank.
- □ Close the shut-off valve on the CO2 regulator.
- □ Pull the black handle on the keg coupler and press it upward to close the connection between the beer keg and the keg coupler.
- □ Pull on the tap handle(s) to help drain beer from the lines.
- □ Disconnect the beer line(s) and CO2 gas line(s) from the keg coupler.
- □ Put the beer lines in a bucket to drain the remaining beer from the lines.
- □ Remove the beer keg(s).
- □ Remove the keg coupler(s) from the keg(s).
- □ Follow the steps in "Installing the keg coupler" to insert a new keg.

REPLACING THE CO2 TANK

- □ Turn the kegerator/beverage cooler off and disconnect power from the wall outlet.
- □ Close the main valve on the CO2 tank.
- □ Close the shut-off valve on the CO2 regulator.
- □ Disconnect CO2 gas line from the keg coupler.
- □ Remove the CO2 tank.
- □ Follow the steps in "Installing the CO2 regulator and tank" to insert a new tank.

CONVERTING YOUR BEER DISPENSER TO A BEVERAGE REFRIGERATOR

- □ Follow the steps in "Replacing kegs" and "Replacing the CO2 tank."
- □ Remove the draft arm assembly and pull the beer line through the top of the cabinet.
- □ Replace the top cabinet plug.
- □ Install the two wire shelves.
- □ Adjust the temperature as desired.

Care and Cleaning

CLEANING AND MAINTENANCE

- □ A regular cleaning once every two weeks of the faucet, beer hose, and keg coupler is extremely important when the kegerator is used frequently. If this is not performed, the beer will foam. Additionally bacteria, yeast, mold, and beer stone will build up and quickly degrade the quality of draft beer. A few minutes spent cleaning on a regular basis will add life to your system, and improve the quality of your draft beer!

EXTERIOR CLEANING

- □ The door and cabinet may be cleaned with a mild detergent and lukewarm water solution such as 2 tablespoons of baking soda to one quart of water.
- □ Do not use solvent based or abrasive cleaners.
- □ Use a soft sponge and rinse with clean water.
- □ Wipe with a soft clean towel to prevent water spotting.
- □ If the door panel is stainless steel, it can discolor when exposed to chlorine gas and moisture.
- □ Clean stainless steel with a cloth dampened with a mild detergent and warm water solution.
- □ Never use an abrasive or caustic cleaning agent.

INTERIOR CLEANING

- □ The kegerator's interior should be cleaned occasionally.
- □ Disconnect power to the unit.
- □ Open the door and remove the contents.
- □ Wait until the unit defrosts.
- □ With a clean cloth, wipe down the interior of the unit.
- □ Reconnect power to the unit.

Troubleshooting

Problems	Possible Causes	Solutions
The kegerator does not turn on.	□ There is a power failure. □ The unit is not plugged in. □ A house fuse has blown or the circuit breaker is tripped.	□ Ensure the unit is plugged in and the power outlet has power. □ Plug the unit in to a power outlet that has sufficient amperage. □ Replace the broken fuse in your fuse box or reset the breaker.
The kegerator will not reach the desired temperature	□ The unit is placed too close to a heat source. □ The door is opened too frequently or for a long period of time.	□ Keep the unit away from direct sun light or other heat sources. □ Close the door tightly and do not open the door too frequently or for a long period of time.
The kegerator is making strange noises	□ Certain sounds are normal. □ The unit is not level or is touching another appliance.	□ Read the “Normal Sounds” section. □ Check to make sure that the kegerator is level, and that it is not in contact with another appliance or furniture.
The body of the kegerator is electrified.	□ The unit is not grounded properly.	□ Contact your local electrician to test your electrical grounding system.
Frost is forming in the kegerator.	□ The environment is humid. □ The ambient temperature is too low. □ The door is being opened too frequently.	□ If frost builds up, manual defrosting may be required. □ You can try running the kegerator on a warmer temperature setting, minimizing the number of times you open the door, or unplugging the unit to allow the frost to melt.
The door will not shut properly.	□ Your unit is not level. □ The door gasket is dirty. □ The door gasket is not installed correctly. □ The keg used is too large.	□ Make sure the unit is on a level surface. □ Clean the door gasket. □ Make sure the door gasket is properly installed. □ This kegerator will not fit oversized kegs.

VISSANI™

Questions, problems, missing parts? Before returning to the store,
call Vissani Customer Service
8 a.m. – 7 p.m., EST, Monday-Friday, 9 a.m. – 6 p.m., EST, Saturday

1-855-847-7264

HOMEDEPOT.COM

Retain this manual for future use.