FISHER & PAYKEL

ACTIVESMART™
INTEGRATED REFRIGERATOR

RS90A, RS9120W,
RS36A72, RS36A80 & RS36W80 models

USER GUIDE

NZ AU GB IE HK SG IN US

CONTENTS

Introduction	3
Safety and warnings	4
Storage features	10
RS90, RS36A72 and RS36A80 models	10
RS9120W and RS36W80 models	12
ActiveSmart™ special features	14
Control panel	14
External display (Ice & Water models only)	15
Humidity control system	16
Fast Freeze	17
Ice On/Off	17
Ice Boost	17
Bottle Chill	17
Operating instructions	18
Cleaning care	23
Food care	28
User warnings and sounds	29
Troubleshooting	30
European Directive 2012/19/EU on Waste Electrical and Electronic Equipment (WEEE)	34
Service & Warranty	35

IMPORTANT!
SAVE THESE INSTRUCTIONS

The models shown in this user guide may not be available in all markets and are subject to change at any time. For current details about model and specification availability in your country, please go to our website fisherpaykel.com or contact your local Fisher & Paykel dealer.

Note that the word 'refrigerator', throughout this user guide, refers to the combination of refrigerator/freezer products.

Registration

Register your product with us so we can provide you with the best service possible.

To register your product visit our website: fisherpaykel.com

INTRODUCTION

Thank you for buying this Fisher & Paykel integrated refrigerator.

Introducing the next generation in Fisher & Paykel refrigeration. With new flush-fit design and the ability to easily slide into existing kitchen spaces or be integrated behind kitchen cabinetry, these family-sized fridges offer a seamless look to the kitchen while providing excellent food care with ActiveSmart™ technology.

As your life changes, so can your refrigerator. This book explains the features and functions, and will help you get the most out of your refrigerator.

We hope you enjoy your new integrated refrigerator.

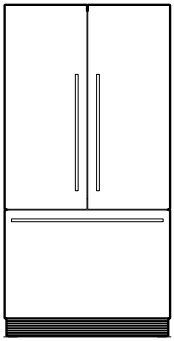

RS90A/RS36A72J

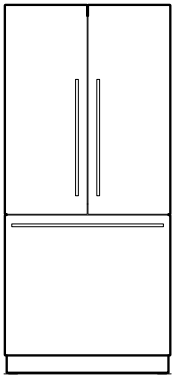

RS36A80J

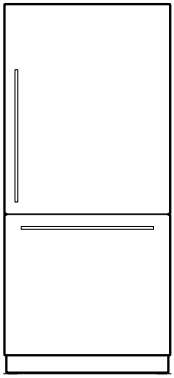

RS9120W/RS36W80J

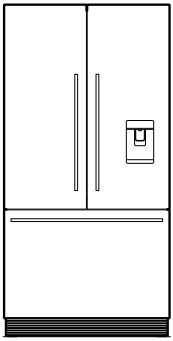

RS90AU/RS36A72U

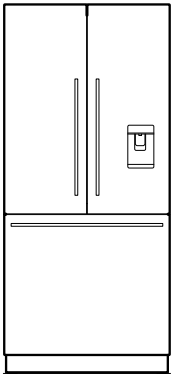

RS36A80U

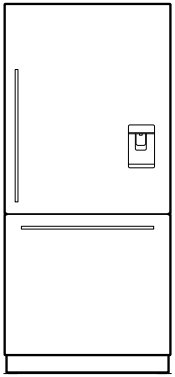

RS9120WU/RS36W80U

Note: Not all models are available in all countries.

⚠ WARNING!	
	**Electric Shock Hazard** **Read and follow the safety and warnings outlined in this user guide before operating this appliance.** **Failure to do so can result in death, electric shock, fire or injury to persons.**

 **R600a**	**This refrigerator may contain flammable refrigerant isobutane (R600a).**

Use this appliance only for the intended purpose as described in the user guide.

IMPORTANT SAFETY INSTRUCTIONS

WARNING!
When using this appliance always exercise basic safety precautions including the following:

- **This appliance is not intended for use by persons (including children under the age of 8 years) with reduced physical, sensory or mental capabilities, or lack of experience and knowledge, unless they have been given supervision or instruction concerning use of the appliance by a person responsible for their safety.**
- **Young children should be supervised to ensure they do not play with the appliance.**
- **The manufacturer's installation instructions for product and cabinetry ventilation must be followed when installing the appliance.**

- **To avoid hazard due to instability of the appliance, it must be fixed in accordance with installation instructions.**
- **Keep ventilation openings, in the appliance enclosure or in the built-in structure, clear of obstruction.**
- **Do not use mechanical devices or other means to accelerate the defrosting process.**
- **Do not damage the refrigerant circuit.**
- **In case of damage to the refrigerant circuit, ventilate the area by opening all windows. Do not operate electrical equipment or any other equipment that may produce arcs, sparks or flames in the area. Contact your Fisher & Paykel Authorized Repairer immediately to arrange for the appliance to be repaired.**
- **It is hazardous for anyone other than an authorized service person to service this appliance. In Queensland, the authorized service person must hold a gas work license or authorization for hydrocarbon refrigerants to carry our service or repairs which involve removal of covers.**
- **Connect to potable water supply only.**

Electrical

- **This appliance must be installed in accordance with the installation instructions before use.**
- **To allow disconnection of the appliance from the supply after installation, incorporate a switch in the fixed wiring in accordance with the wiring rules.**
- **Never unplug your refrigerator by pulling on the power cord. Always grip the plug firmly and pull straight out from the outlet.**

- **Do not plug in any other appliance at the same power point as your refrigerator or use extension cords or double adapters.**
- **Repair or replace immediately all electric service cords that have become frayed or otherwise damaged. Do not use a cord that shows cracks or abrasion along its length or at either the plug or appliance end.**
- **If the power supply cord is damaged, it must only be replaced by your Fisher & Paykel Authorized Repairer because special purpose tools are required.**
- **When moving your appliance away from the wall, be careful not to roll over or damage the power cord.**
- **Do not use electrical appliances inside the food storage compartments of the appliance.**

IMPORTANT!
Your refrigerator is designed to operate for many years without the need for service checks. However, if your refrigerator is malfunctioning, have it attended to by your Fisher & Paykel Authorized Repairer as soon as possible.
All electrical repairs must be carried out by an adequately trained service technician or qualified electrician.

Cleaning

- **Many commercially available cleaning products contain solvents that may attack the plastic components of your refrigerator and cause them to crack.**

- **Avoid using anti-bacterial cleaning products on either the interior or exterior of the cabinet as they may cause rusting of metal components and cracking of plastic components.**
- **Please refer to the 'Cleaning care' section of this user guide for further information.**

Disposal

- **Extreme care must be taken when disposing of your old appliance to avoid hazards:**
  - **The flammable refrigerant gas must be safely removed.**
  - **The thermal insulation foam in this appliance contains flammable insulation blowing gases, any exposed foam may be highly flammable and must be carefully treated during disposal.**
  - **The doors and panels should be removed and the shelves left in place so that children may not easily climb inside.**
- **Your Fisher & Paykel Authorized Repairer will be able to give advice on environmentally friendly methods of disposing of your old refrigerator or freezer.**

Storing food and drinks

- **Do not store explosive substances such as aerosol cans with a flammable propellant in this appliance.**
- **Never store volatile or flammable materials in your refrigerator as they may explode.**
- **Never freeze liquids in glass containers. Liquid expands during freezing, which may cause the container to explode.**

- **Never freeze carbonated drinks. They may explode.**
- **Do not consume food if it is too cold. Food removed from the freezer compartment may be cold enough to cause damage when brought into contact with bare skin, eg frozen ice cubes.**

Power failure – food safety

- **Do not refreeze frozen foods that have thawed completely. The food may be dangerous to eat. Follow the recommendations below if you discover food in your freezer has thawed:**
  - **Ice crystals still visible – food may be refrozen but should be stored for a shorter period than recommended.**
  - **Thawed but refrigerator cold – refreezing generally not recommended. Fruits and some cooked food can be refrozen but use as soon as possible.**
    Meat, fish, poultry – use immediately or cook then refreeze.
    Vegetables – discard as they usually go limp and soggy.
  - **Thawed and warmer than 5°C – discard all food.**

Ice making

IMPORTANT!

- **Avoid contact with the moving parts of the ice maker ejector mechanism, and do not place your fingers on the automatic ice-making mechanism while the appliance is in operation.**
- **Do not use ice cubes that may have become discolored, usually with a green-blue color. If such discoloration is noted, discard the ice cubes and contact your Fisher & Paykel trained and supported service technician.**

RS90, RS36A72 and RS36A80 models

Refrigerator compartment

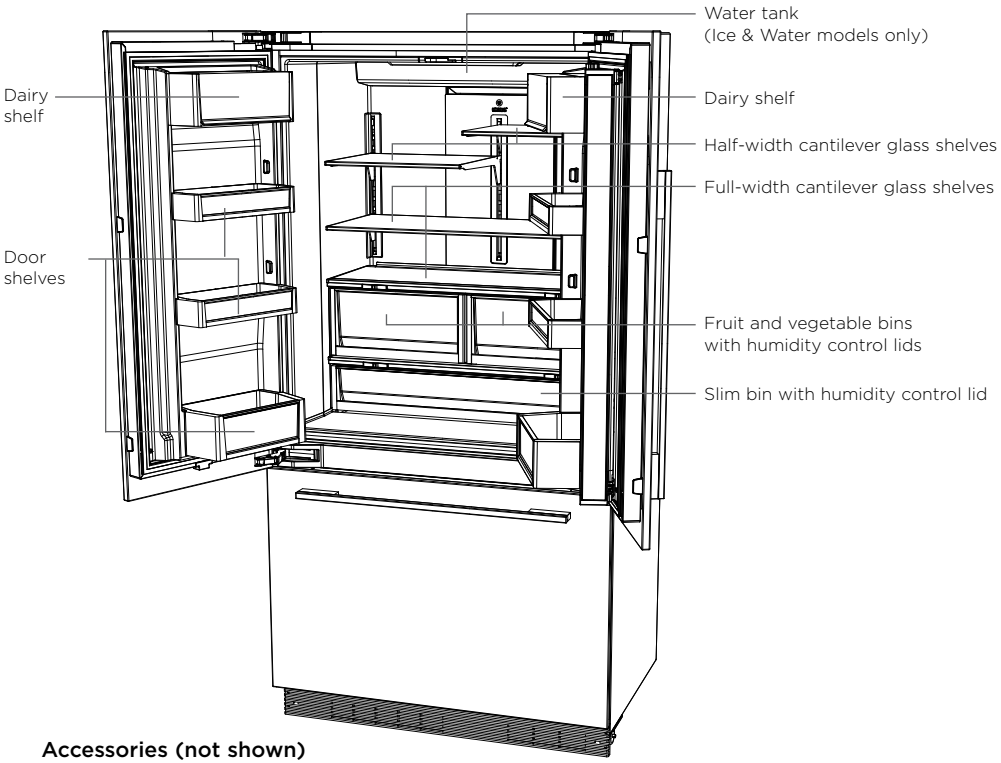

Accessories (not shown)

- Single bottle holders

Freezer compartment

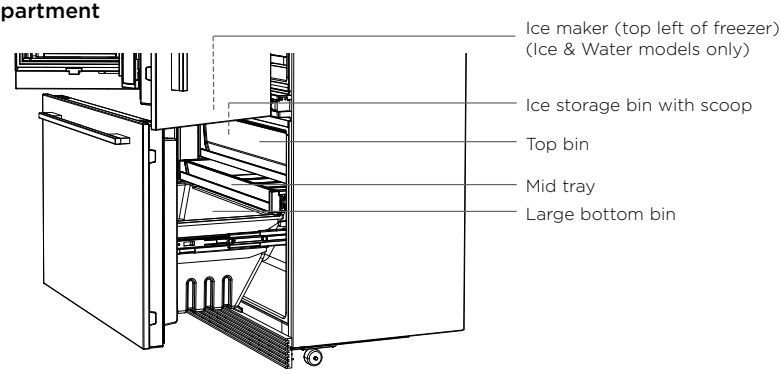

Acessories (not shown)

- Manual ice tray with lid (non-Ice & Water models only)

STORAGE FEATURES

RS90, RS36A72 and RS36A80 models

REFRIGERATOR COMPONENTS	
Fruit and vegetable bins with humidity control lids	• Store all fruits and vegetables in separate bins without external packaging. • Separate the fruits and vegetables to prevent ethylene-sensitive produce from ripening too quickly, and help extend their storage life.
Slim bin with humidity control lid	• The slim bin stores long vegetables which cannot fit in the fruit and vegetable bins. • Also used for storing deli items and beverages, or for defrosting foods.
Cantilever glass shelving	• Heat treated safety glass. • Can be removed and positioned at heights to suit your storage requirements. • The half-width shelves can be positioned side by side, best when storing large items such as platters. • Maximize the storage space when storing items of varying heights by positioning the half-width shelves at different levels.
Dairy shelf and door shelves	• The top shelves are dairy compartments, designed to store butter and cheeses. • The middle shelves are designed for general items, condiments and drinks. • The bottom shelves are designed to store large drinks or those drinks you require frequent access to. • Clear windows give ultimate visibility to what is being stored in the door shelves. • Adjustable door shelves with dividers.
Single bottle holders (not shown)	• Placed along the length of any shelf to store a variety of bottles. • Store bottles with the neck facing the front of the refrigerator. • Unused bottle holders can be stacked up on top of one another to maximize shelf space.

FREEZER COMPONENTS	
Shelving	• Selectable shelf heights. • Heat treated safety glass. • Adjustable door shelf dividers.
Ice maker (Ice & Water models only)	• Removable ice container. • Hygienic ice scoop.
Freezer bins	• Allow for easy storage of frozen food items.

RS9120W and RS36W80 models

Refrigerator compartment

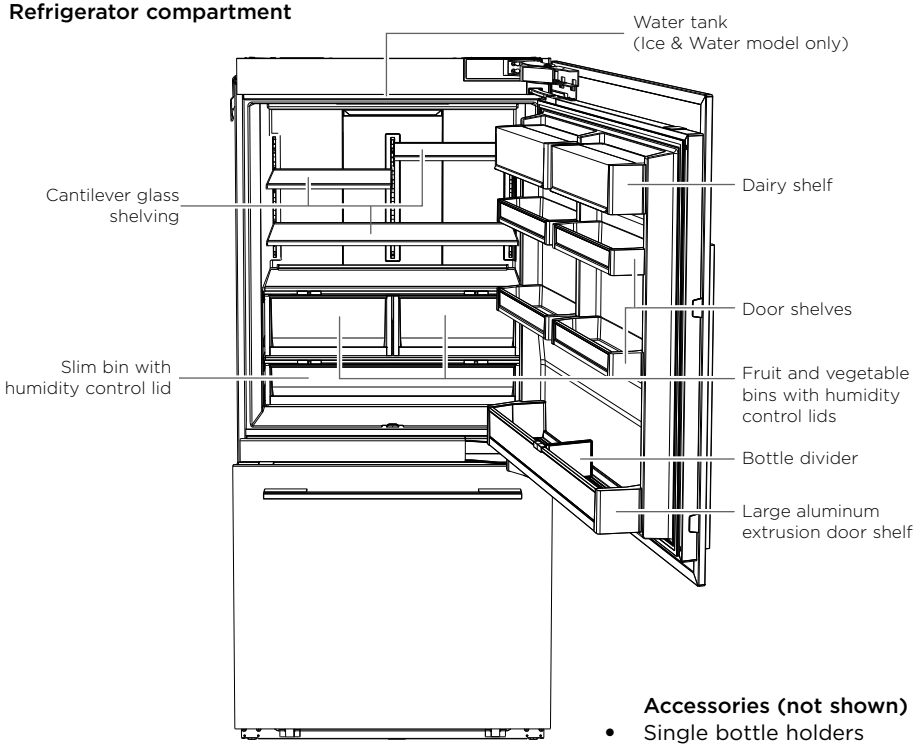

Accessories (not shown)

- Single bottle holders

Freezer compartment

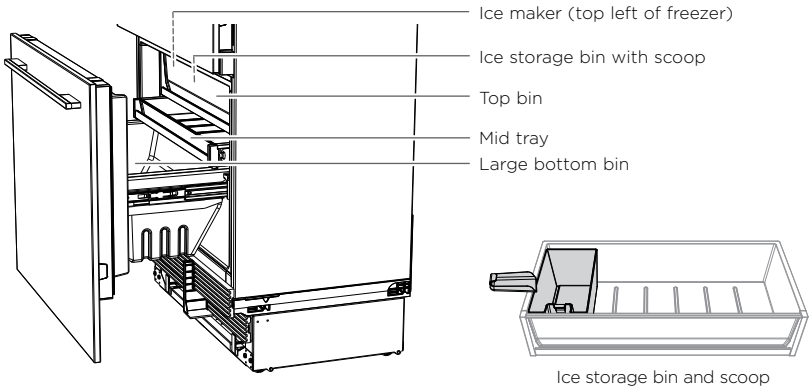

Ice storage bin and scoop

STORAGE FEATURES

RS9120W and RS36W80 models

REFRIGERATOR COMPONENTS	
Fruit and vegetable bins with humidity control lids	• Store all fruits and vegetables in separate bins without external packaging. • Separate the fruits and vegetables to prevent ethylene-sensitive produce from ripening too quickly, and help extend their storage life.
Slim bin with humidity control lid	• The slim bin stores long vegetables which cannot fit in the fruit and vegetable bins. • Also used for storing deli items and beverages, or for defrosting foods.
Cantilever glass shelving	• Heat treated safety glass. • Can be removed and positioned at heights to suit your storage requirements. • The half-width shelves can be positioned side by side, best when storing large items such as platters. • Maximize the storage space when storing items of varying heights by positioning the half-width shelves at different levels.
Dairy shelf and door shelves	• The top shelves are dairy compartments, designed to store butter and cheeses. • The middle shelves are designed for general items, condiments and drinks. • The bottom shelves are designed to store large drinks or those drinks you require frequent access to. • Clear windows give ultimate visibility to what is being stored in the door shelves. • Adjustable door shelves with dividers.
Single bottle holders (not shown)	• Placed along the length of any shelf to store a variety of bottles. • Store bottles with the neck facing the front of the refrigerator. • Unused bottle holders can be stacked up on top of one another to maximize shelf space.

FREEZER COMPONENTS	
Shelving	• Selectable shelf heights. • Heat treated safety glass. • Adjustable door shelf dividers.
Ice maker (Ice & Water models only)	• Removable ice container. • Hygienic ice scoop.
Freezer bins	• Allow for easy storage of frozen food items.

Control panel

The control panel enables you to view and modify all the features and options of your refrigerator.



Control panel
for Ice & Water models

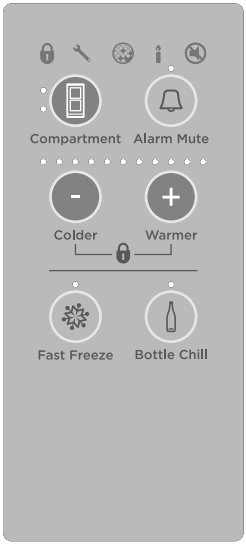

Control panel
for non-Ice & Water models

SmartTouch™ CONTROL PANEL FEATURES		
	Compartment	Allows you to select which compartment to adjust the temperature.
	Alarm mute	Deactivates the door alarm for 20 minutes.
−	**Colder**	Reduces the temperature of compartments.
+	**Warmer**	Increases the temperature of compartments.
	Fast Freeze	Boosts the freezing speed by dropping the freezer to its coldest temperature for 12 hours.
	Bottle Chill	Allows you to rapidly chill your beverage for a set time of 15 minutes.
	Ice On/Off	Indicates when automatic ice maker is on or off.
	Ice Boost	Increases ice production up to 30% from standard ice making, and deactivates automatically after 24 hours.
	Key lock	Allows you to disable the buttons on the control panel.
	Faults	Indicates when an error occurs after you open the fresh food compartment door.
	Filter change indicator	Icon will illuminate indicating that water filter requires changing.
	Sabbath mode	All alarms, lights and displays are deactivated for 80 hours.
	Key mute	Allows you to silence all button presses.

External display (Ice & Water models only)

The external display enables you to lock the water dispenser, indicates to you when ‘Bottle Chill’ is activated and when your water filter requires changing.



EXTERNAL DISPLAY FEATURES		
Lock	**Dispenser lock button and LED light**	Locks/unlocks the water dispenser. When locked the LED above the button will illuminate.
	Bottle Chill indicator	Icon will illuminate indicating when ‘Bottle Chill’ is activated and flashes when beverage is ready.
	Filter change indicator	Icon will illuminate indicating when water filter requires changing.

Humidity control system

Humidity control lids

- The control lids are fitted to the fruit and vegetable bins and slim bin of your refrigerator.
- These lids seal the bins and provide a humid microclimate to extend the storage times of fruit and vegetables.
- The lids have specially designed grooves that retain moisture to prevent condensation from dripping onto the fruits and vegetables at times of high humidity.

Humidity slide

- Each bin has an adjustable humidity slide that enables you to choose a fruit or vegetable setting depending on your storage needs.
- If there is too much water in the bins (due to high humidity), the control can be adjusted towards the fruit setting to reduce drips of water and/or wipe the water dry (if required).
- Be aware that a small amount of water in the bins is beneficial for fruit and vegetable storage.
- We recommend using the vegetable setting when you store ethylene-sensitive vegetables such as lettuce, spinach, broccoli, cabbage, carrots.
- We recommend using the fruit setting when you store high-ethylene fruits such as citrus fruits, stone fruits and some tropical fruits.
- We recommend adjusting the humidity slide to the center when you store both fruits and vegetables.
- We recommend storing all fruits and vegetables without external packaging and in separate bins.
  - Separating the fruits and vegetables prevent ethylene-sensitive produce from ripening too quickly, and help extend their storage life.

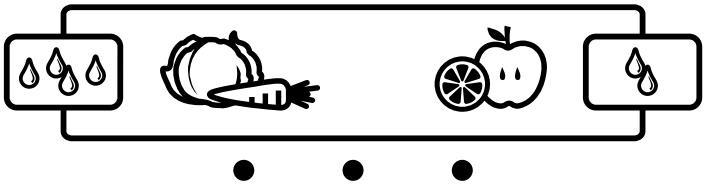

Humidity control graphic

Fast Freeze

'Fast Freeze' boosts the freezing speed by dropping the freezer to its coldest temperature for 12 hours. This helps retain the freshness, texture and taste during the freezing process.

- To activate, press on the control panel. The light above illuminates to indicate this feature is activated.

Ice On/Off

The ice maker is off when you turn on your refrigerator for the first time after installation.

- To activate your automatic ice maker, press once. The light above illuminates to indicate the Ice maker is on.

Ice Boost

Increases ice production by up to 30%, and deactivates automatically after 24 hours.

- The 'Ice Boost' feature is off when you turn on your ice maker for the first time.
- To activate, press . The light above will illuminate when the 'Ice Boost' feature is on.
- To deactivate 'Ice Boost' feature manually, press again. The light above button will not illuminate.
- Activating the 'Ice Boost' feature will automatically turn on the ice maker.
- Deactivating the ice maker automatically deactivates the 'Ice Boost' feature.

Bottle Chill

This feature allows you to rapidly chill your beverage for 15 minutes. The time taken to chill depends on the size of your beverage. If your beverage is not cold enough, return it to the freezer and reset the 'Bottle Chill' feature.

- To activate, press . The light above will illuminates to indicate this feature is activated. For Ice & Water model, the icon will illuminate on the external display.
- An alarm will sound after 15 minutes to remind you to remove your beverage from the freezer.

To silence the alarm — Automatic ice model
Open the fresh food compartment door and press the button on the control panel.

To silence the alarm — Ice & Water model:
Open the fresh food compartment door and press the button on the control panel, or press the button once on the external display.

- When 'Bottle Chill' is deactivated, the light above will not illuminate and the icon is not visible on the **external** display (Ice & Water model only).

Temperature control

- Once you turn on your refrigerator for the first time, the cooling system will automatically cool all compartments to their set temperatures.
- This will take between 2 – 3 hours
- The control panel enables you to change and control the temperatures of both compartments accurately and independently regardless of the temperature or humidity of the surroundings whether it is summer or winter.
- We recommend checking the operation of your refrigerator once every 4 hours for the first 24 hours.
- If at any time you notice that the refrigerator is not cooling properly, call your installer/ Fisher & Paykel trained and supported service technician to verify the unit is operating properly. Take immediate steps to prevent food from spoiling by storing in another refrigerator or freezer.

Adjusting the fresh food compartment temperature
When the fresh food compartment door is opened, the interior light automatically illuminates. The temperature for this compartment will show as a series of lights.

- To increase the temperature, press + . This will increase the number of lights.
- To decrease the temperature, press − . This will decrease the number of lights.
- Fewer lights illuminated indicates a colder temperature for the compartment selected.

Adjusting the freezer compartment temperature
- Press ▯ once, the freezer compartment light will be illuminated.
- To increase the temperature, press + . This will increase the number of lights.
- To decrease the temperature, press − . This will decrease the number of lights.
- Fewer lights illuminated indicates a colder temperature for the compartment selected. Note: successively pressing ▯ will automatically scroll between compartments. When the door is re-opened the control panel will return automatically to the fresh food compartment setting.

Door alarms

- If the fresh food compartment door is left open, the alarm will beep after 90 seconds, if the freezer door is left open, the alarm will beep after 60 seconds.
- If either of the doors remains open, subsequent beeps will sound every 30 seconds for 5 minutes
- If either door remains open for 5 minutes or longer, an alarm will sound continuously and the interior compartment light(s) will turn off. The alarm will stop only when the door(s) is closed.

Alarm Mute

- To activate, press once.
- The light above will illuminate to indicate the appliance is muted.
- If the doors are left open for 5 minutes or more, the compartment light turns off and normal door alarms are suspended.
- 'Alarm Mute' will deactivate after 20 minutes.
- To deactivate manually, press again.
- Closing the door also deactivates the 'Alarm Mute'.

Key mute

Key mute allows you to silence all button presses.

- To activate key mute, press for 4 seconds.
- The icon on the control panel illuminates.
- Once key mute is activated, all key sounds are silenced.
- Door alarms and 'Bottle Chill' alarm are still operational.
- To deactivate, press for 4 seconds. The icon will no longer illuminate.

Key lock

'Key Lock' allows you to disable the buttons on the control panel. This is useful when cleaning your appliance.

- To activate key lock, press − and + together for 4 seconds.
- The icon on the control panel will illuminate.
- Pressing any buttons will sound several beeps to let you know they are disabled.
- To deactivate, press − and + together for 4 seconds.
- The icon will not illuminate.

Sabbath mode

When activated — the display, all alarms and lights are deactivated for 80 hours.

- To activate Sabbath mode, press , and − together for 4 seconds.
- The icon on the control panel will illuminate.
- To deactivate manually, press , and − together for 4 seconds.
  Note: If you turn off your appliance while in Sabbath mode, it will resume automatically once the appliance is switched on again.

Before you start using the Ice & Water or automatic ice

- Ensure your ice and water system is correctly installed by following the installation guide supplied with your appliance.
- Check your refrigerator is switched on.
- Allow at least 2 hours for your refrigerator to cool before use.
- Complete all the flushing steps detailed in the this user guide to ensure optimum performance of your water filter.

Water dispenser (Ice & Water model only)


Water dispenser

Flushing out the water filtration system

- Press the water dispenser pad to dispense 1 gal (4L) of water.
  - There may be carbon residue dispensed together with water. This is not harmful, and normal during flushing process.
- Wait for 4 minutes before dispensing again.
- Dispense another 1 gal (4L) of water. Your water dispenser is now ready for use.
- Water will continue to drip from the dispenser for a few more days after installation to clear remaining trapped air in the dispenser.

Dispensing

- Your water dispenser is designed for one-handed operation.
- To dispense water, gently press the dispensing pad with a glass or container.
- To stop the flow of water, simply pull your glass away from the dispensing pad.
- Pressing hard against the dispensing pad will not increase the flow or dispense more water.

IMPORTANT!

To avoid damage to property or personal injury do not put hands, fingers or objects up the dispenser opening.

Dispenser lock

The dispenser lock is located on the **external** display and can be activated to prevent water from being dispensed. This is useful when you are cleaning the **external** display or when there are small children around.

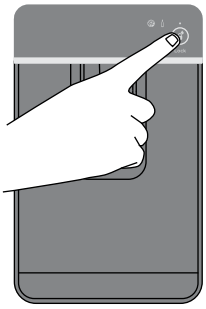
Dispenser lock

- To activate dispenser lock, press for 4 seconds. The light above will illuminate.
- When the dispenser pad is pressed, several beeps will sound to alert the user that water cannot be dispensed.
- To deactivate dispenser lock and dispense water, press for 4 seconds. The LED above will not illuminate.

Automatic ice maker

Before turning on your automatic ice maker, the water filter must be installed (refer to your installation guide) and flushed to remove any impurities or trapped air in the filter system.

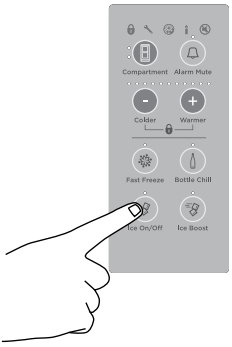

Turning ice maker on

① To activate your automatic ice maker, press once. The light above illuminates to indicate the ice maker is on.
② Press the , − and + together for 4 seconds then close the doors. The ice tray will empty the water into the bin below. The ice tray will only empty after the doors are closed.
③ Repeat step ② to remove dust in the ice tray collected during manufacture and transport.
④ Empty the water, dry the bin and return it correctly.
⑤ Once your ice maker is turned on the first bin of ice may be discolored, this is not harmful and normal during the flushing process. Discard the first full bin of ice made. Your ice maker is now ready for use.
   - **For Ice & Water only models**, the water filter will reach optimum performance after two to three full bins of ice.
   - **For Ice only models**, the water filter will reach optimum performance after four to five full bins of ice.

Turn the ice maker off if:

- There is no water supply for several hours.
- You are removing the ice storage bin for a period of time.
- You are going on holiday/vacation.

Collecting ice

Your automatic ice maker produces approximately eight cubes of ice every 3 – 4 hours, depending on the freezer compartment temperature and the number of times the door is opened.

- The ice cube tray is filled with filtered water.
- Frozen ice cubes are dispensed from the ice tray and into the ice storage bin below.
- Ice making will continue until the storage bin is full, and only resumes once you start to use the stored ice.
- When the 'Ice Boost' feature is activated, ice production will increase up to 30% from standard ice making. This function automatically deactivates after 24 hours.
- If large amounts of ice are needed, remove the ice storage bin and allow ice to fill the top freezer bin.
- For maximum ice storage, level the stored cubes with the ice scoop.
- If ice is not used often, the quality of ice cubes will deteriorate. Empty the ice storage bin periodically and wash in lukewarm water. Dry thoroughly and place back into the correct position.

IMPORTANT!

Avoid contact with the moving parts of the ice maker ejector mechanism, and do not place your fingers on the automatic ice making mechanism while the refrigerator is in operation.

Water filter

The water supplied to your appliance for ice making is filtered to remove impurities through a filter located the bottom front of your appliance. Replace your filter cartridge every 6 months.

- There is a replacement indicator icon on the control panel which will appear when the filter needs replacing.
- Replacement filter cartridges can be purchased online from fisherpaykel.com or by calling Fisher & Paykel Customer Care. Details of the replacement filter cartridge are labeled on the cartridge. Instructions on how to install your replacement water filter are provided with the filter.

To reset indicator:

- Press and + together for 4 seconds.
- The on the control panel will turn off when reset.

IMPORTANT!

- **We recommend the water filter to be used from the time of installation.**
- **Do not reset indicator before filter is changed or filter monitoring will be inaccurate.**

To disable the filter indicator:

When no filter is fitted, you can disable the filter indicator.

- To disable filter indicator, press , and + together for 4 seconds to turn it off. The will flash once on the internal and external displays.
- To turn on the filter indicator again, press , and + together for 4 seconds, The on the control panel and external display will flash twice.

Exterior

Stainless exterior doors

- Clean the exterior door with liquid dishwashing detergent dissolved in warm water and a soft cloth.
- Dry the door with a lint-free cloth.
- Do NOT use any abrasive, stainless steel cleaners or solvents on the door surface.

Other exterior surfaces

- Clean all other exterior surfaces with a mix of warm water and liquid dishwashing detergent, and a soft cloth.
- Rinse with clean water and dry with a clean, lint-free cloth.
- For custom door panels follow manufacturers cleaning instructions

Door gasket

- We recommend you clean the magnetic door gasket every three months with a toothbrush, and liquid detergent dissolved in warm water.

External display and water dispenser (Ice & Water models only)

Activate the 'Lock' function to prevent water from dispensing when cleaning, refer to 'Dispenser lock'. Clean the pad and interface panel with a damp, soft lint-free cloth.

Drip tray (Ice & Water models only)

- To clean, remove the drip tray from the dispenser panel (**A**).
- Pull the two halves of the tray apart (**B**).
- Clean with liquid detergent dissolved in water and a soft lint-free cloth.
- Rinse with clean water and dry with a clean, lint-free cloth.
- Securely clip the two halves together.
- Re-insert the drip tray back into the dispenser panel.

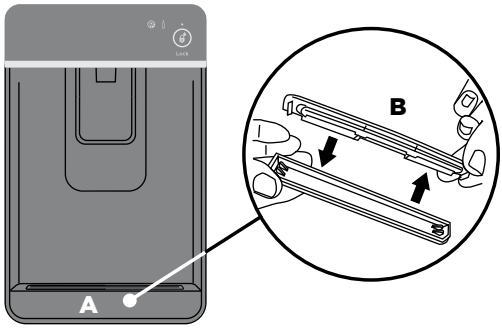

Cleaning the drip tray

Toe kick grilles and filter (all models)

Your refrigerator is fitted with a toe kick grille and filter to protect the internal working components. We recommend cleaning the grille and filter in conjunction with changing your water filter cartridge (every 6 months).

- To maximize operating efficiency, keep ventilation openings clear of obstructions by regularly vacuuming the flooring in front of your appliance.
- More frequent cleaning may be necessary for dusty homes or those with pets shedding hair.

To clean the top toe kick grille and filter (RS90, RS91, RS36A80 and RS36W80 models only):

① Remove the air flow divider by pulling towards you (**A**).
② To remove the top toe kick grille, insert fingers into the left and right square openings on the grille. Pull towards you (**B**).
③ To remove toe kick filter, insert fingers into the left and right square openings on the filter. Pull towards you (**C**).
④ Clean both components with liquid detergent dissolved in warm water and a soft lint-free cloth.
⑤ Rinse with clean water and dry with a clean, lint-free cloth.

To replace toe kick filter and grille:

① To replace toe kick filter, align filter tabs onto the rails and push to the rear until it clips securely.
② To replace top toe kick grille, align securing hooks then firmly push grille onto product until it clips securely (**D**).
③ To replace air flow divider, align the divider underneath the grille tabs indicator and clip onto the vanes of the bottom grille (**E**).

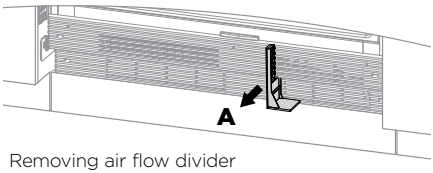

Removing air flow divider

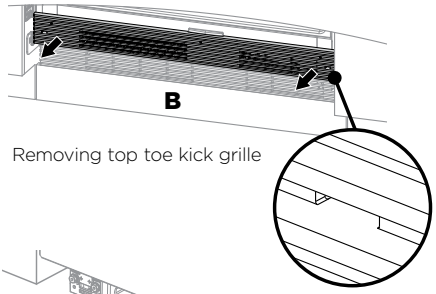

Removing top toe kick grille

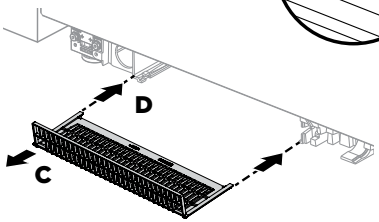

Removing toe kick filter

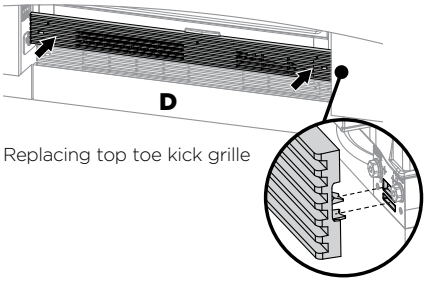

Replacing top toe kick grille

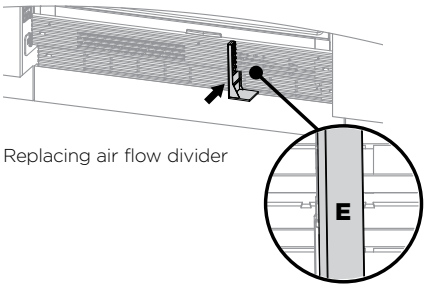

Replacing air flow divider

To clean the toe kick grille and filter (RS36A72 models only):

1. Remove the toe kick grille by inserting fingers into the left and right square openings on the grille. Pull towards you (**A**).
2. To remove toe kick filter, insert fingers into the left and right square openings on the filter. Pull towards you (**B**).
3. Clean both components with liquid dishwashing detergent dissolved in warm water and a soft lint-free cloth.
4. Rinse with clean water and dry with a clean, lint-free cloth.

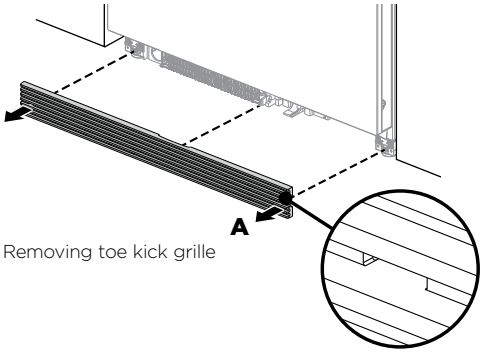

Removing toe kick grille

To replace toe kick filter and grille:

1. To replace toe kick filter, align filter tabs onto the rails and push to the rear until it clips securely (**C**).
2. To replace toe kick grille, ensure spacers on the inside of the toe kick are positioned correctly. Align securing hooks then firmly push grille onto product until it clips securely (**D**).

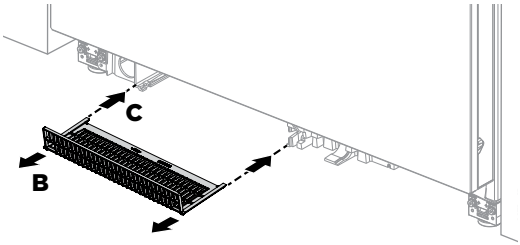

Removing and replacing toe kick filter

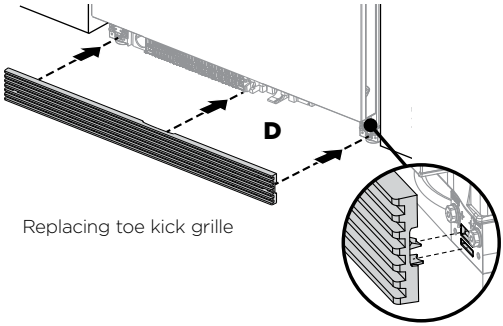

Replacing toe kick grille

Interior

- It is important to keep the interior of the refrigerator clean to help prevent food from becoming contaminated during storage.
- The amount and types of food stored determines how often cleaning should be carried out in the refrigerator (ideally once every 1 – 2 weeks).
- For ease of cleaning, empty the refrigerator first and remove all glass shelves, door shelves and storage bins.
- Do not use harsh chemicals, abrasives, ammonia, chlorine, bleach, concentrated detergents, solvents or abrasive scouring pads on any part of your appliance. Some of these chemicals may damage your appliance.
- Clean all surfaces with a mild liquid detergent dissolved in warm water and a soft cloth. Rinse with clean water and dry with a clean, lint-free cloth.

Cantilever glass shelves

- Clean with liquid detergent dissolved in warm water and a soft lint-free cloth.
- Rinse with clean water and dry with a clean, lint-free cloth.

① To remove glass shelves, hold the front and back edge of the shelf firmly.
② Push the shelf up vertically to dislodge from back support lugs.
③ Pull the shelf towards you.

Single bottle holders

- Clean with liquid detergent dissolved in warm water and a soft lint-free cloth.
- Rinse with clean water and dry with a clean, lint-free cloth.

Humidity control system

- We recommend to use only liquid detergent dissolved in warm water and a soft lint-free cloth when you clean the glass shelf above the fruit and vegetable bins.
- Rinse with clean water and dry with a clean, lint-free cloth.
- You don't need to disassemble the parts when cleaning the humidity control lid that is attached to the underside of the glass shelf.
- Clean the lid by simply wiping the grooves with a damp, lint free cloth.

Fruit and vegetable bins and slim bin
When cleaning, use only liquid detergent dissolved in warm water and a soft lint-free cloth. Rinse with clean water and dry with a clean, lint-free cloth.

① To remove a bin, extend the bin on its runners, and make sure you empty the bin.
② Hold both sides of the bin corners and push the bin firmly upwards to dislodge from the securing tabs.
③ Pull the bin towards you to remove. Push both runners back into the refrigerator.
④ To return the bin, extend the runners and place the bin on top of the runners.
⑤ Push the bin slowly onto of the runners until you feel it clip onto the runners. Ensure the bin tabs are clipped securely onto the runners before use.

IMPORTANT!

The runners are pre-lubricated to help opening and closing the bins. They do not need to be lubricated again. Do not remove the grease from the runners to maintain its smooth function. Do not immerse the runners in water.

Freezer bins and freezer tray
Removing the freezer bins and tray when cleaning is not necessary. Simply wipe clean with a soft lint-free cloth.

Ice storage bin

- We recommend that you clean your ice bin and discard any old ice in the bottom of the bin(s) regularly.
- Use only liquid detergent dissolved in warm water and a soft lint free cloth when cleaning. Rinse with clean water and dry with a clean, lint-free cloth.
- Ensure that the ice scoop is always placed in front of the bin.
- It is important to regularly clean your ice bin and discard any old ice in the bottom of the bin(s). Cleaning the ice maker components is not necessary.
- We recommend that you turn off the ice maker before you leave for a vacation/holiday. Refer to 'Automatic ice maker' section.
- On your return, turn on the automatic ice maker and discard the first full bin of ice. Refer to 'Automatic ice maker' section.

Holiday/Vacation

Leave your refrigerator operating while you are on holiday/vacation.

For Ice & Water models

- Turn the ice maker off on the control panel.
- Shut off the water supply to the refrigerator.
- On your return, turn on the water supply to the refrigerator.
- Dispense 1 gal (4L) of water and discard to ensure the water tank is refilled with fresh water.
- Turn on the ice maker.
- Discard the first full bin of ice.

For best food care

- Store only high-quality, fresh food in your appliance.
- Store perishable foods in the appliance immediately after purchase. Storing at room temperature increases the rate of deterioration and can allow harmful microbial growth.
- Foods such as meat, poultry and seafood should be well wrapped or sealed in suitable packaging to prevent dehydration, color deterioration, loss of flavor, and transfer of odor.
  - We recommend storing these foods on the bottom shelf of your appliance or in one of the bins to prevent potential spills and cross-contamination with other foods.
- Ensure hot foods and beverages are cooled sufficiently before placing them into the appliance. Hot items may cause other foods to warm to unsafe temperatures. It may also cause sealed items to sweat/condensate — which is undesirable.
- Beverages are best stored standing upright in the door shelves or on the bottle racks provided.
- Ensure raw and cooked foods are stored separately to avoid cross-contamination.
- Consume food items within the recommended storage times. Discard foods that show sign of spoilage.
- Keep door openings to a minimum to maintain optimum storage temperatures inside your appliance.
- We recommend using 'Fast Freeze' when you are adding food items to your freezer, such as after grocery shopping. This feature will ensure the food is frozen within the shortest period of time, locking in the freshness and extending the shelf life of your food.

Items stored in your refrigerator

- Dairy items such as butter and cheeses should be stored in the covered door shelf to minimize any transfer of odor or odor absorption from other foods.
- Eggs should be stored in their carton to avoid absorption of strong odors through their porous shell structure.

Items stored in your freezer

- We recommended cooling carbonated beverages only when the 'Bottle Chill' function is active.
  - Do not store carbonated drinks without this function in the freezer. Failure to remove beverages could lead to freezing liquid and the likelihood of bottle/can explosion.
- Ensure air is removed from packaging to avoid large formation of ice crystals and prevent freezer burn.
- To maintain freshness and quality, we recommend defrosting foods in the refrigerator. Ensure partially or fully defrosted foods are never re-frozen — cook immediately.

User warnings

Faults

If a fault occurs when you open the fresh food compartment door, the icon will illuminate on the internal control panel and an alarm will sound.

- Please count the number of beeps made when the fresh food compartment door is opened.
- Please record the number and sequence of temperature lights displayed on the internal control panel and contact a Fisher & Paykel trained and supported service technician in order to repair the fault. You can do this by going online to fisherpaykel.com or by contacting our Customer Care Centre.
- To silence the fault alarm press any button on the **internal** control panel. The icon will remain illuminated until the fault is corrected.

Normal refrigerator sounds

ActiveSmart™ refrigerators are designed to have excellent energy ratings and cooling performance. As a result, it can produce sounds somewhat different to your old refrigerator.

Normal operational sounds include:

- Fan air flow sound. ActiveSmart™ refrigerators have fans which change speed depending on demand. During cooling periods, such as after frequent door openings, fans circulate the cold air in the refrigerator and freezer compartments producing some air flow sound. This is quite normal.
- Cracking or popping sounds. This may occur when the automatic defrost function is operating.
- Running water sound. This is the liquid refrigerant in the system and can be heard as a boiling or gurgling noise.
- An audible hissing sound after closing the freezer door. This is due to the pressure difference between the warm air that has entered the cabinet and suddenly cooled, and the outside air pressure.
- Humming sounds. This is the compressor running and is quite normal.
- Gasket noises which can normally occur over time due to a build up of dirt and/or grime. See ‘Cleaning Care’ section.
- Ice maker and water dispenser sounds:
  - Motor operation (low humming).
  - Running water as the ice maker and/or water tank fills.
  - Water valve opening and closing (hissing sound).
  - Ice being loosened from the ice molding tray (cracking).
  - Ice dropping into bin (clunking).
- Other sounds may be heard for the following reasons:
  - Cabinet not level
  - Floor uneven or weak
  - Bottles or jars rattling on shelves

TROUBLESHOOTING

If there is a problem with your appliance, please check the following points before contacting your local Fisher & Paykel Authorized Repairer or the Customer Care Centre.

Product parts and accessories can be purchased through Fisher & Paykel Customer Care Centre or online at fisherpaykel.com (this service is available to selected markets only).

All models

PROBLEM	POSSIBLE CAUSES	WHAT TO DO
Appliance does not operate.	No electricity at power outlet.	Check that the plug is correctly connected and power switched on.
		Check another appliance at the same outlet.
		Check house fuse.
Light not working.	Light not functioning.	The light cannot be serviced by the user. Contact your Fisher & Paykel Dealer or Fisher & Paykel Authorized Repairer.
	Refrigerator not working.	Check refrigerator is turned on at the wall or at the isolating switch.
Motor operates for long periods.	Hot weather.	Minimize door openings to allow temperature to stabilize.
	Frequent door openings.	
	Large amount of food recently added.	
	Temperature control set too low.	See ‘Operating instructions’ section.
	Doors not sealing properly.	Check that cabinet is level and gasket seals are clean. See ‘Cleaning Care’ section.
Storage compartments too warm.	Temperature setting not correct.	See ‘Operating instructions’ section.
	Frequent door openings.	Minimize door openings to allow temperature to stabilize.
	Large amount of food recently added.	
Food freezing in the fridge compartment.	Temperature setting not correct.	See ‘Operating instructions’ section.
	Food placed directly in front of air outlets.	Move chill sensitive foods away from the center back of the shelves.
Unfamiliar noises.	Cabinet not stable or level.	See ‘Installation instructions’ booklet.
	Freezer is defrosting.	This is normal.

All models

PROBLEM	POSSIBLE CAUSES	WHAT TO DO
Fault icon illuminates on the internal control panel and an alarm sounds when the fresh food compartment door is opened.	–	Count the number of beeps made, and record the number and sequence of temperature lights displayed on the **internal** control panel. Contact Customer Care Center.
Water in the vegetable bins.	Condensation is formed by the water produced by fruit and vegetables.	A small amount of condensation is beneficial for fruit and vegetable storage.
		Wipe out water with a cloth.
Exterior of cabinet is warm.	This is normal.	–
Condensation on outside of refrigerator/ freezer.	Not unusual during periods of high humidity.	Wipe dry.
Condensation inside fridge compartment.	Frequent or long door openings.	Minimize door openings.
	Door gasket leaking.	Check that gasket is sitting flat and sealing tightly.
	Not unusual during periods of high humidity.	Wipe dry.
Tray/bin does not slide in and out evenly.	Packaging trapped.	Check to ensure no food or packaging is trapped behind the tray/bin.
Ice cubes taste tainted.	Unsealed packages may be transmitting odor/taste.	Discard ice cubes and clean ice storage bin. See ‘Cleaning Care’ section.
		Wrap or cover strong smelling foods.
Excessive gasket noise.	May be due to a build up of dirt and/or grime.	See ‘Cleaning Care’ section.
Door not closing.	An obstruction is blocking door closing.	Move obstruction.

Ice & Water models only

PROBLEM	POSSIBLE CAUSES	WHAT TO DO
Automatic ice maker does not work.	Ice maker has not been turned on.	Switch on ice maker, see 'Using your ice maker' section.
	Water supply turned off or not connected.	Connect water supply.
	Freezer compartment not working.	Contact Customer Care Center.
	Water pressure too low.	Check water pressure.
	Water line kinked/squashed.	Check water line for kinks/squashing.
	Filter clogged.	Water filter may need replacing.
	Ice cubes stick in ice bin.	Remove ice bin, loosen cubes and remove clumped ice. Refit ice box.
Ice cubes taste tainted.	Unsealed packages may be transmitting odor/taste.	Discard ice cubes and clean ice storage bin. See 'Cleaning Care' section.
		Wrap or cover strong smelling foods.
	Poor taste from incoming water.	Replacement filter cartridges can be purchased online from fisherpaykel.com or by calling Fisher & Paykel Customer Care.
Slow ice cube freezing.	Door may have been left ajar.	Close door.
	Freezer compartment set too warm.	Turn temperature to a colder setting. (See 'Operating instructions' section).
Wet ice/ ice clumping.	Low water pressure.	Check water pressure.
	Filter blocked.	Replace filter cartridge. Replacement filter cartridges can be purchased online from fisherpaykel.com or by calling Fisher & Paykel Customer Care. Instructions on how to install your replacement water filter are provided with the filter.
	Long freezer door openings.	Gently tap ice to unstick or, if large clumps occur, empty ice bin and make new ice.
	High ambient temperature.	
	Ice bin left out of freezer compartment for a length of time.	
	Ice will stick together over time.	

Ice & Water models only

PROBLEM	POSSIBLE CAUSES	WHAT TO DO
Water has poor taste/odor.	Refrigerator not used for an extended period.	Flush the water filtration system. Dispense and discard 1 gal (4L) of water, this will ensure the water tank is refilled with fresh water.
Water dispenser does not work.	Water supply turned off or not connected.	Turn water on.
	Supply line may be blocked.	Check supply for kinks or leaks.
	On first installation there may be air in water system.	To remove air, run 1 gal (4L) of water through the dispenser.
	Filter may be blocked and needs replacing.	Replace filter cartridge. Replacement filter cartridges can be purchased online from fisherpaykel.com or by calling Fisher & Paykel Customer Care.
	Water frozen in tank.	Increase temperature to a warmer setting in fresh food compartment and freezer.
Water in first glass is warm.	Water dispenser not used for extended period.	Discard first glass of water dispensed.
	Tank capacity used recently.	Allow water time to cool.
Drips overflow drip tray.	Air trapped in tank.	Flush the water filtration system.
	New filter installed.	Dispense and discard 1 gal (4L) of water, then rest the dispenser pad for a further 2 minutes. Dispense and discard a further 1 gal (4L) of water. This will displace trapped air in the water tank and filter system.
Water flow rate has slowed down.	Filter cartridge is restricted. Check if filter icon is illuminating.	Replace filter cartridge. Replacement filter cartridges can be purchased online from fisherpaykel.com or by calling Fisher & Paykel Customer Care.
Ice buildup inside freezer compartment.	Freezer door not closing tightly.	Arrange items in freezer so door can close tightly.
		Check and clean door gasket seal.
Ice maker sounds.	Normal ice maker operation.	See ‘User warnings and sounds’ section.
Small or large ice cubes.	Insufficient or excessive water pressure.	Check water pressure.

EUROPEAN DIRECTIVE 2012/19/EU ON WASTE ELECTRICAL AND ELECTRONIC EQUIPMENT (WEEE)

EU This appliance is marked according to the European Directive 2012/19/EU on Waste Electrical and Electronic Equipment (WEEE). By ensuring this product is disposed of correctly, you will help prevent potential negative consequences for the environment and human health, which could otherwise be caused by inappropriate handling of this product.

The symbol  marked on the serial plate, or on the documents accompanying the product, indicates that this appliance cannot be treated as household waste. It shall be handed over to the applicable collection point for the recycling of electrical and electronic equipment. Disposal of the appliance shall be carried out in accordance with the local environment regulations for waste disposal and ensure the refrigerant circuit is not damaged.

For more detailed information about treatment, recovery and recycling of this product, please contact your local city office, your household waste disposal service or your Fisher & Paykel retailer/dealer from whom you purchased this product.

SERVICE & WARRANTY

For details of your manufacturer's warranty and contacts for servicing, refer to your separate service and warranty book provided with your appliance.

This product has been designed for use in a normal domestic (residential environment). This product is not designed for any commercial use. Any commercial use by the customer will affect this products manufacturer's warranty

Complete and keep for safe reference:

Model _____

Serial No. _____

Purchase Date _____

Purchaser _____

Dealer _____

City _____

State _____

Zip _____

Country _____

FISHERPAYKEL.COM

© Fisher & Paykel Appliances 2018. All rights reserved.
The product specifications in this booklet apply to the specific products and models described at the date of issue. Under our policy of continuous product improvement, these specifications may change at any time. You should therefore check with your Dealer to ensure this booklet correctly describes the product currently available.

NZ AU GB IE HK SG IN US

849754A 07.18