ESSENTIALS
INSTRUCTION MANUAL

FRIDGE FREEZER

C55CW12
C55CS12



currys

Contents

Safety Warnings **4**

Unpacking **6**

Installation **7**

- Location 7
- Levelling the Unit 7
- Free Space Requirements 7
- Cleaning Before Use 11
- Before Using Your Unit 11

Product Overview **12**

Operation **13**

- Switching On Your Unit 13
- Adjusting the Temperature 13
- Noises Inside the Unit! 13
- Tips for Keeping Food in the Unit 14
- Preparations for Freezing 14
- Defrosting Frozen Food 15

Cleaning **16**

- Defrosting 16
- Cleaning the Interior and the Exterior of the Unit 16

Maintenance **17**

- Changing the Internal Light 17
- Care When Handling / Moving the Unit 17
- Servicing 17
- Switching Off for Long Periods of Time 17
- Condensation 17

Disposal **17**

Specifications **18**

Safety Warnings

For your continued safety and to reduce the risk of injury or electric shock, please follow all the safety precautions listed below.

- Read all instructions carefully before using the unit and keep them for future reference.
- Retain the manual. If you pass the unit onto a third party, make sure to include this manual.
- This appliance is intended for indoor household use and similar applications such as:
  - farm houses and by clients in hotels, motels and other residential type environment;
  - bed and breakfast type environment;
  - catering and similar non-retail applications.
- Ensure that the plug is easily accessible to enable disconnection from the mains supply.
- If the mains cable is damaged, it must be replaced by the manufacturer, its service agent or a qualified technician in order to avoid a hazard.
- Choose a location for your unit away from heat sources such as radiators or fires as refrigerant and vesicant are burnable.
- The unit must be manoeuvred by a minimum of 2 persons.
- This appliance can be used by children aged from 8 years and above and persons with reduced physical, sensory or mental capabilities or lack of experience and knowledge if they have been given supervision or instruction concerning use of the appliance in a safe way and understand the hazards involved. Children shall not play with the appliance. Cleaning and user maintenance shall not be made by children without supervision.
- Children should be supervised to ensure that they do not play with the unit.
- If your unit is fitted with a lock to prevent children being trapped inside, keep the key out of reach and not in the vicinity of the unit.
- Do not store explosive substances such as aerosol cans with a flammable propellant in this appliance.

- Do not store bottles or glass containers in the freezer compartment. Contents can expand when frozen (fizzy drinks) which may break the bottle and damage your freezer compartment. (If applicable)

WARNING

- Keep ventilation openings in the unit enclosure or in the built-in structure clear of obstructions.
- Do not use mechanical devices or other means to accelerate the defrosting process, other than those recommended by the manufacturer.
- Do not use electrical appliances inside the food storage compartments of the unit, unless they are of the type recommended by the manufacturer.
- Do not damage the refrigerant circuit (The refrigerant is a very environmental-friendly gas but is also combustible. Take care when transporting or moving the unit to ensure that the refrigeration circuit is not damaged. In the event of damage avoid naked flames or ignition sources and ventilate the room in which the unit is placed for a few minutes.)

WARNING

IT IS HAZARDOUS FOR ANYONE OTHER THAN AUTHORISED SERVICE PERSONNEL TO CARRY OUT SERVICING OF REPAIRS WHICH INVOLVE THE REMOVAL OF COVERS.

TO AVOID THE RISK OF AN ELECTRICAL SHOCK DO NOT ATTEMPT REPAIRS YOURSELF.

Thank you for purchasing your new Currys Essentials Fridge Freezer.

We recommend that you spend some time reading this instruction manual so that you fully understand all the operational features it offers.

Read all the safety instructions carefully before use and keep this instruction manual for future reference.

Unpacking

Remove all items from the packaging. Retain the packaging. If you dispose of it please do so according to local regulations.

The following items are included:

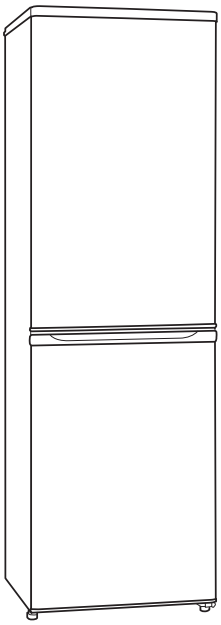

The Main Unit

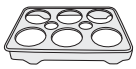

Egg Tray x 2



Adjustable Glass Shelf x 2

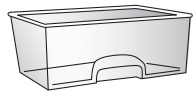

Salad Bin

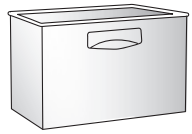

Lower Freezer Drawer

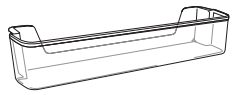

Lower Fridge Door Shelf

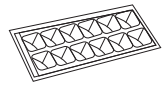

Ice Tray



Salad Bin Cover Shelf

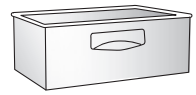

Upper Freezer Drawer x 2



Upper Fridge Door Shelf x 2

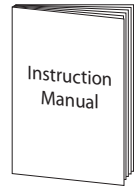

Instruction Manual

If items are missing, or damaged please contact Partmaster (UK only).
Tel: 0344 800 3456 for assistance.

Location

When selecting a position for your unit you should make sure the floor is flat and firm, and the room is well ventilated with an average room temperature of between 16°C and 38°C. Avoid locating your unit near a heat source, e.g. cooker, boiler or radiator. Also avoid direct sunlight as it may increase the electrical consumption. Extreme cold ambient temperatures may also cause the unit not to perform properly. This unit is not designed for use in a garage or outdoor installation. Do not drape the unit with any covering.

Levelling the Unit

To do this adjust the two levelling feet at the front of the unit.

If the unit is not level, the doors and magnetic seal alignments will not be covered properly.

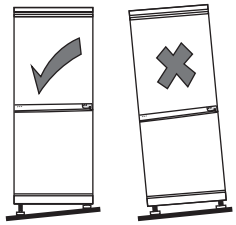

Free Space Requirements

When installing the unit, ensure that 25 mm of free space is left at both sides, 50 mm at the rear of the unit and 25 mm at the top of the unit. The door can be opened to the right or the left, depending on which best suits the location.

Please ensure there is more than twice the width and depth distance space of the unit to fully open the door to a maximum angle of 160°.

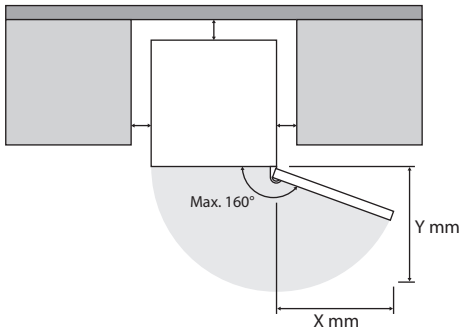

INSTALLATION

1. Stand the refrigerator, use a flat bladed screw driver to remove the 4 screw covers at the rear of the refrigerator lid.

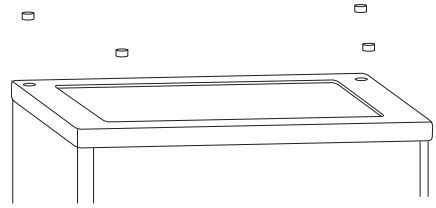

2. Unscrew and life the refrigerator lid from the rear and remove it, then lift it.

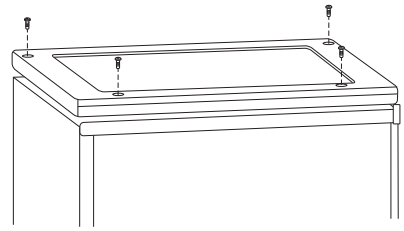

3. Remove the three bolts, then remove the upper hinge that hold the door in place. Lift the upper door and place it on a padded surface to prevent it from scratching.

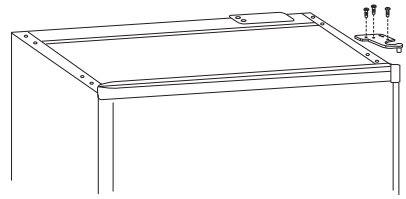

4. Remove the two flange screw, then remove the middle hinge that hold the lower door in place. Lift the lower door and place it on a padded surface to prevent scratching it.

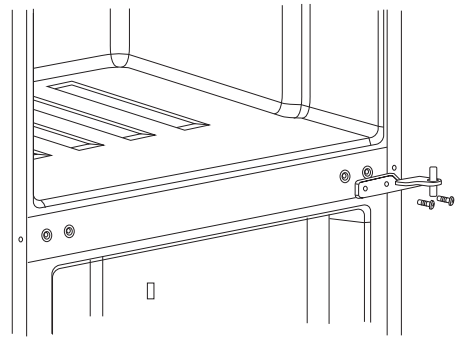

5. Remove the hinge hole cover from the right holes as illustrated and transfer them to the uncover hole at the left side.

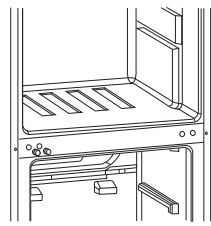

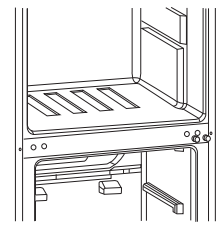

INSTALLATION

6. Remove both adjustable feet and remove the bottom hinge bracket by unscrewing the bolts.

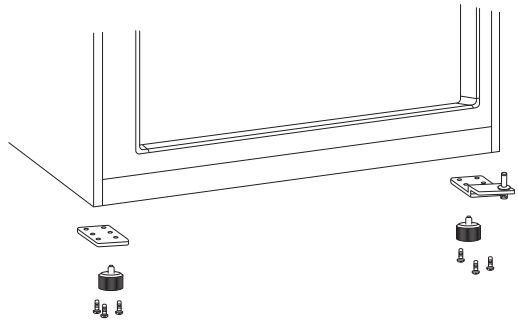

7. Unscrew and remove the bottom hinge pin, turn the bracket over and replace it. Refit the bracket fitting the bottom hinge pin. Replace both adjustable feet.

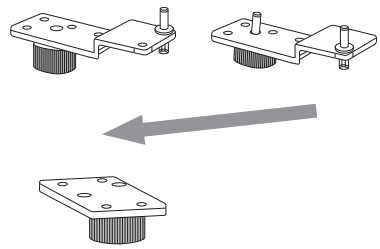

8. Remove the screw nail of the lower door stopper, and transfer them to the left side of the lower door, then tight the screw nail.

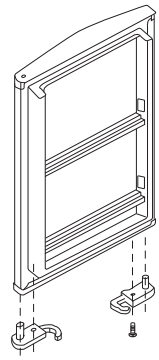

9. Transfer the lower door to the property position. Secure the door's level, make the bottom hinge pin into the lower hole of the door, then tight the bolts.

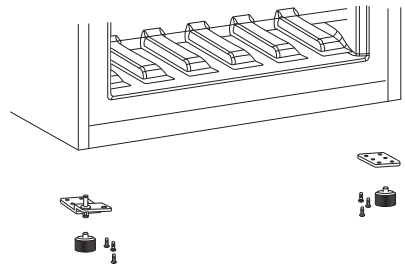

INSTALLATION

10. Make the middle hinge reverse the direction 180°C, then transfer it to the left property position. Make the middle hinge pin in the upper hole of the lower door, then tight the bolts. Transfer the upper door to the property position. Secure the door's level; make the middle hinge pin into the lower hole of the upper door.

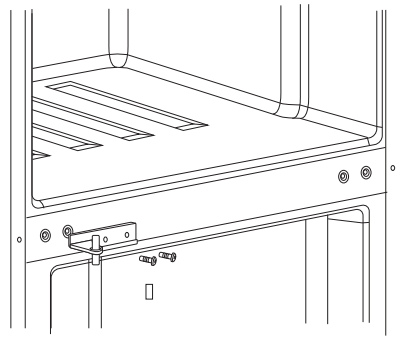

11. Move the accessory B from the upper cover of upper door and fit the accessory A that is a small detachable part from a small bag.

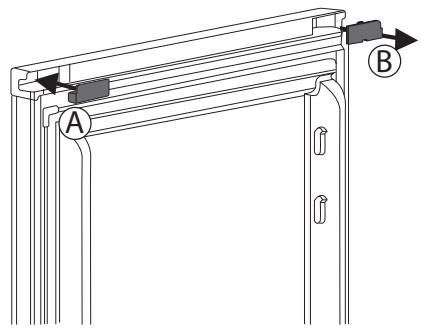

12. With the reassembled top hinge located in the hole in the top inside left corner of the upper door, fix the top hinge using the 3 screws. Remove the decorative block of top cover to the other side. Replace the top cover using screws, replace the circular hole plugs.

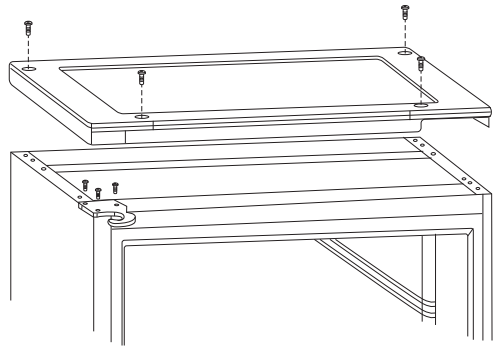

13. With the doors closed, check that the doors are aligned horizontally and vertically and that the seals are closed on all sides before finally tightening the bottom hinge. Re-adjust the levelling feet as needed.

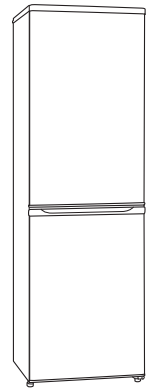

Cleaning Before Use

Wipe the inside of the unit with a weak solution of bicarbonate soda. Then rinse with warm water using a 'wrung-out' sponge or cloth. Wipe completely dry before replacing the shelves and salad bin. Clean the exterior of the unit with a damp cloth.

If you require more information refer to the **Cleaning** section.

- **Before Plugging in YOU MUST**
  Check that you have a socket which is compatible with the plug supplied with the unit.
- **Before Turning On!**
  Do not turn on until two hours after moving the unit. The coolant fluid needs time to settle.

Before Using Your Unit

Before placing any food in your unit, turn it on and wait for 24 hours, to make sure it is working properly and to allow it time to fall to the correct temperature. Your unit should not be overfilled.

Product Overview

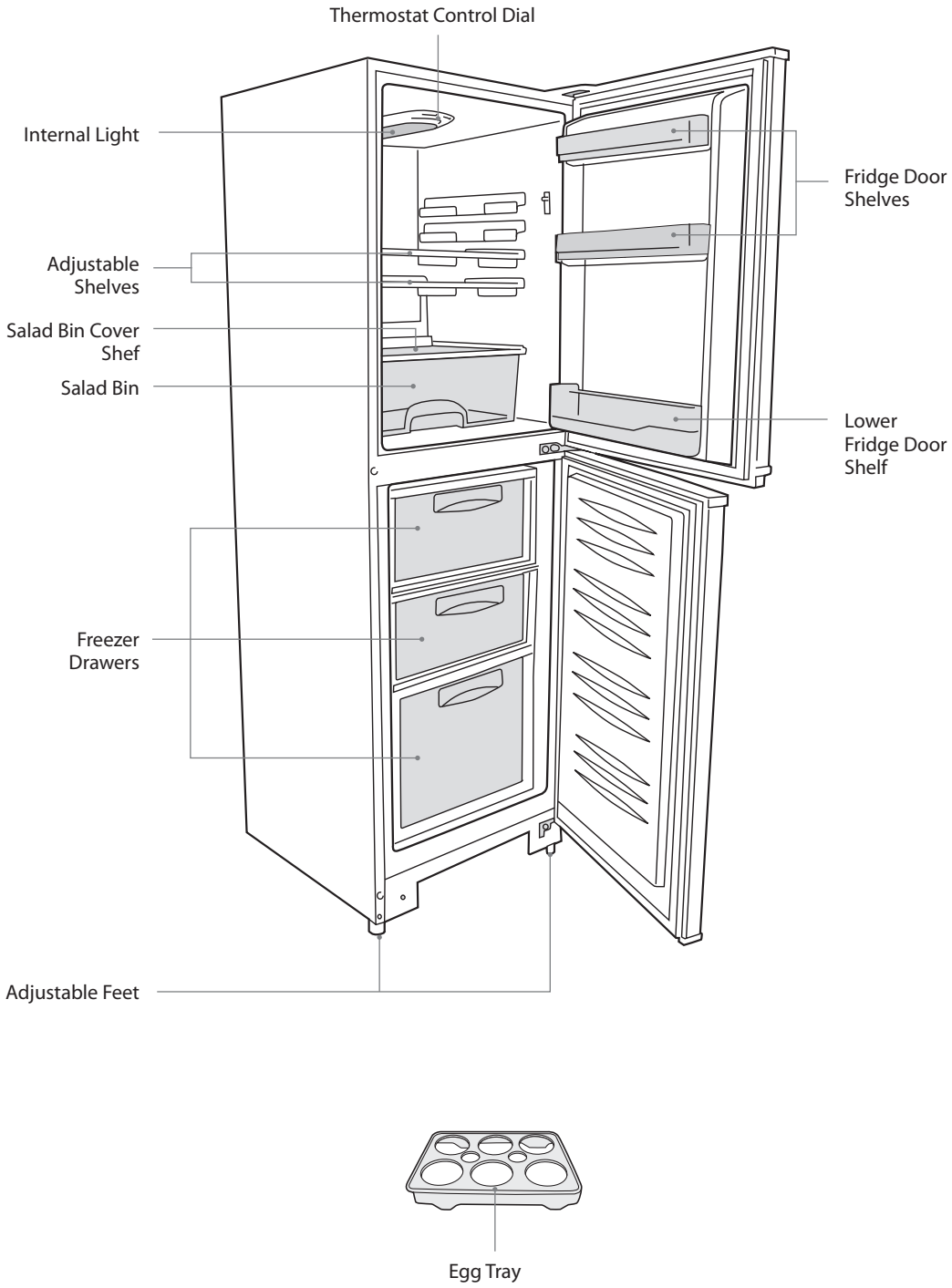

Operation

Switching On Your Unit

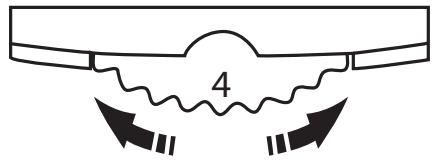

1. Connect the mains cable to the mains socket. The internal temperature of your unit is controlled by a thermostat. There are eight settings, of which position **7** is the coldest and position **0** turns the unit off.
2. Adjust the thermostat control dial to the desired position, bear in mind that the higher the number, the lower the temperature. Position **4** recommended setting when operating at normal room temperature (between 16°C and 38°C).
3. The unit may not operate at the correct temperature if it is in a particularly hot or a particularly cold room, or if you open the doors often.
4. To ensure that the unit is cool enough to sufficiently chill and freeze your food, wait 24 hours before filling it with food.
5. If you are concerned that your unit is not being kept cold enough and wish to check the temperature, you will need a special fridge/ freezer thermometer. These are available from most supermarkets and hardware shops.

   Place the thermometer in either the fridge or freezer compartment and leave overnight. The correct temperature for the fridge compartment should be an average of 5°C. The correct temperature for the freezer compartment should be -18°C or lower.

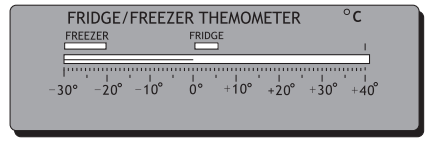

Adjusting the Temperature

The internal temperature of the unit is controlled by a thermostat. The recommended position is between **1** to **4** for colder working environments (i.e. during winter) and between **5** to **7** for hotter environments. Please adjust according to the environment.

Noises Inside the Unit!

You may notice that your unit makes some unusual noises. Most of these are perfectly normal, but you should be aware of them!

These noises are caused by the circulation of the refrigerant liquid in the cooling system. It has become more pronounced since the introduction of CFC free gases. This is not a fault and will not affect the performance of your unit. This is the compressor motor working, as it pumps the refrigerant around the system.

Tips for Keeping Food in the Unit

- Cooked meats/fishes should always be stored on a shelf above raw meats/fishes to avoid bacterial transfer. Keep raw meats/fishes in a container which is large enough to collect juices and cover it properly. Place the container on the lowest shelf at the bottom of the fridge compartment.
- Leave space around your food, to allow air to circulate inside the compartments. Ensure all parts of the unit are kept cool.
- To prevent transfer of flavours and drying out, pack or cover the food separately. Fruit and vegetables do not need to be wrapped.
- Always let pre-cooked food cool down before you put in the unit. This will help to maintain the internal temperature of the unit.
- To prevent cold air escaping from the unit, try to limit the number of times you open the doors. We recommend that you only open the doors when you need to put food in or take food out.

Preparations for Freezing

- Use quality food and handle it as little as possible. Freeze food in small quantities as it freezes faster, takes less time to defrost and enables you to control the quantity you need better.
- Leave cooked food to cool completely. Chill food before freezing if possible.
- Consider how you will want to cook the food before freezing it.
- Don't freeze food in metal containers if you may want to microwave it straight from the freezer.
- Use special freezer bags, freezer film, polythene bags, plastic containers, and aluminium foil (heavy duty grade only). If in doubt, double wrap your food. Don't use aluminium foil for acidic foods, e.g. citrus fruits. Don't use thin cling film, glass, or used food containers without cleaning.
- Exclude as much air from the container as possible. You could buy a special vacuum pump which sucks excessive air out of the packaging.
- Leave a small amount of air space when freezing liquids to allow expansion.
- You can use the space in the freezer most efficiently if you freeze liquids (or solids with liquids, e.g. stew) in square blocks. This is known as "Preforming". Pour the liquid into a polythene bag which is inside a square sided container. Freeze it, and then remove it from the container and seal the bag.
- Label your frozen foods as they will look the same when in frozen state. Use special freezer tapes, labels and pens with different colours. This allows you to easily organise and to effectively use the freezer. Write the contents and date; otherwise the frozen food might exceed the storage time and this could cause food poisoning. Please refer to your food packaging for the recommended storage time.

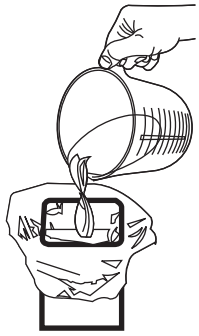

You may also add the weight and cooking notes, e.g. "defrost first", "cook from frozen" and keep a separate log of what is in each drawer. This will save opening the door and searching around unnecessarily.

Defrosting Frozen Food

1. Take the frozen food out from the unit and uncover the frozen food. Let it defrost at room temperature. Don't forget that defrosting in a warm area encourages the growth of bacteria and low temperature cooking may not destroy dangerous bacteria.
2. Drain off and throw away any liquid lost during defrosting.
3. Always make sure there are no ice-crystals in the food before cooking, particularly with meat. These crystals indicate that the food has not fully defrosted.
4. Cook food as soon as possible after defrosting.
5. Many microwaves and ovens have a defrost setting. To avoid bacterial build up, only use these if you intend to cook the food immediately afterwards.



Never re-freeze anything that has been defrosted unless you cook it again, to kill off harmful bacteria. Never re-freeze defrosted shellfish. Re-seal packs properly after removing items. This prevents drying or freezer-burn and a build up of frost on any remaining food.

Cleaning

Defrosting

Frost might build up in the freezer compartment after it has been used for a period of time. Scrape away the frost using a plastic scraper (not included).

Do not use a metal or sharp instrument to scrape away the frost, nor should you use any electrical appliances to aid defrosting.

We recommend that defrosting should be carried out when the frost layer builds up to 10mm (~0.39”). Choose a time when the stock of frozen food is low, follow these procedures:

1. Take out the food, turn the unit off at the mains supply and leave the door open. Ideally, the frozen food should be put into another freezer. If this is not possible, wrap the food in several sheets of newspaper or large towels and then a thick blanket to keep it cool.
2. Place a shallow bowl or pan below the freezer compartment. Scrape away the frost using the plastic scraper. Defrosting the remaining frost can be speeded up by placing a bowl of hot water inside the freezer compartment cabinet and closing the door. As the solid frost loosens, scrape it away with the plastic scraper and remove.

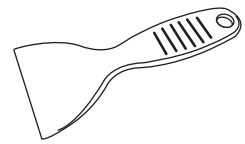

3. When defrosting is complete, clean your unit’s interior and exterior.

Cleaning the Interior and the Exterior of the Unit

- Remove all the shelves, drawers and salad bin before cleaning. To remove the salad bin first remove the lower fridge door shelf.
- Wipe the inside of the unit with a weak solution of bicarbonate soda and then rinse with warm water using a ‘wrung-out’ sponge or cloth. Wipe completely dry before replacing the shelves, drawers and salad bin.
- Use a damp cloth to clean the exterior, and then wipe with a standard furniture polish. Make sure that the doors are closed to avoid the polish getting on the magnetic door seals or inside the fridge/freezer compartments.
- The grille of the condenser at the back of the unit and the adjacent components can be vacuumed using a soft brush attachment.

Maintenance

Changing the Internal Light

The internal light is a LED light and cannot be changed by the user. Call a qualified professional to change the LED light.

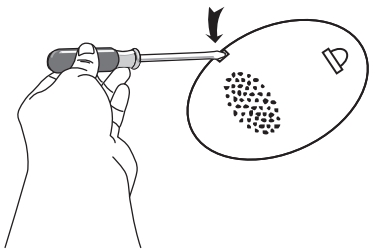

Care When Handling / Moving the Unit

Hold the unit around its sides or base when moving it. Under no circumstances should it be lifted by holding the edges of the top surface.

Servicing

The unit should be serviced by an authorised engineer and only genuine spare parts should be used. Under no circumstances should you attempt to repair the unit yourself. Repairs carried out by inexperienced persons may cause injury or serious malfunction. Contact a qualified technician.

Switching Off for Long Periods of Time

When the unit is not in use for a long period of time, disconnect it from the mains supply, empty all food and clean the unit, leaving the door ajar to prevent unpleasant smells.

Condensation

Condensation may appear on the outside of the unit. This may be due to a change in room temperature. Wipe off any moisture residue. If the problem continues, please contact a qualified technician for assistance.

Disposal

Old units still have some residual value. An environmentally friendly method of disposal will ensure that valuable raw materials can be recovered and used again. The refrigerant used in the unit and insulation materials require special disposal procedures. Ensure that none of the pipes on the back of the unit are damaged prior to disposal.

Up to date information concerning options of disposing of your old unit and packaging from the new one can be obtained from your local council office.

When disposing of an old unit break off any old locks or latches and remove the doors as a safeguard.

Specifications

Model	**C55CW12 / C55CS12**
Appliance Category	Category 7 (Refrigerator – Freezer)
Overall Dimension (W x D x H)	554 x 566 x 1593 mm
Fresh Food Storage Compartment Volume	139L
Frozen Food Storage Volume	70L ✳***
Defrosting Type	Manual Defrost
Climate Class	N/ST
This appliance is intended to be used at an ambient temperature between 16°C and 38°C.	
Storage Temperature	Freezer: ≤ -18°C Fridge: 0-8°C, average ≤ 4°C
Energy Consumption	0.63kWh/24h
Energy consumption **230 kWh per year**, based on standard test results for 24 hours. Actual energy consumption will depend on how the appliance is used and where it is located.	
Airborne Acoustical Noise	43dB
Energy Grading	A+
EU Ecolabel	N/A
Temperature Rise Time	15 hours
Freezing Capacity	3.5kg / 24h
Rated Voltage	220-240V~
Rated Current	0.75A

Features and specifications are subject to change without prior notice.

For general information about this appliance
and handy hints and tips, please visit
www.knowhow.com/knowledgebank or call **0344 5611234**.

Visit Partmaster.co.uk today for the easiest way to buy electrical spares and accessories. With over 1 million spares and accessories available we can deliver direct to your door the very next day. Visit www.partmaster.co.uk or call 0344 800 3456 (UK customers only) Calls charged at National Rate.



The symbol on the product or its packaging indicates that this product must not be disposed of with your other household waste. Instead, it is your responsibility to dispose of your waste equipment by handing it over to a designated collection point for the recycling of waste electrical and electronic equipment. The separate collection and recycling of your waste equipment at the time of disposal will help conserve natural resources and ensure that it is recycled in a manner that protects human health and the environment.
For more information about where you can drop off your waste for recycling, please contact your local authority, or where you purchased your product.

DSG Retail Ltd. (co. no. 504877)
Maylands Avenue, Hemel Hempstead, Herts., HP2 7TG, UK.

IB-C55CW_S12-141224V5