

USER MANUAL

Bottom Mount Refrigerator

WBB3400PA
WBB3400WA
WBB3700PA
WBB3700WA

Westinghouse

CONGRATULATIONS

Congratulations and thank you for choosing our refrigerator. We are sure you will find your new appliance a pleasure to use. Before you use the appliance, we recommend that you read through the entire user manual, which provides the description of the appliance and its functions.

To avoid the risks that are always present when you use an electrical appliance, it is important that the appliance is installed correctly and that you read the safety instructions carefully to avoid misuse and hazards.

We recommend that you keep this instruction booklet for future reference and pass it on to any future owners.

After unpacking the appliance, please check that it is not damaged. If in doubt, do not use the appliance but contact your local customer care centre.

Conditions of use

This appliance is designed and intended to be used in normal domestic applications only.

The symbols you will see in this booklet have these meanings:


WARNING
This symbol indicates information concerning your personal safety.


CAUTION
This symbol indicates information on how to avoid damaging the refrigerator.


TIPS AND INFORMATION
This symbol indicates tips and information about use of the refrigerator.


ENVIRONMENTAL TIPS
This symbol indicates tips and information about economical and ecological use of the refrigerator.

CONTENTS

Important safety information ..... 3 - 4
Installation 5
Initial start up 5
Cleaning 5
Features 6
Temperature control 7
Door alarm 7
LED lighting 7
Refrigerator features 8
Door storage bins 8
Crisper bin 8
- Vegetables storage
- Fruits and small foods storage
Deodoriser 8
Troubleshooting 9
Notes 10
Warranty 11

Please ensure you read the instruction manual fully before you call for service, or a full service fee could be applicable.

Record model and serial number here:

Model: .....

Serial number: .....

IMPORTANT SAFETY INSTRUCTIONS

Please read the user manual carefully and store in a handy place for later reference. Pass the user manual on to new owners of the refrigerator.

TIPS AND INFORMATION

Important – check for any damages or marks

If you find the refrigerator is damaged or marked, you must report it within 7 days if you wish to claim for damage/marks under the manufacturers warranty. This does not affect your statutory rights.

ENVIRONMENTAL TIPS

Information on disposal for users

- Most of the packing materials are recyclable. Please dispose of those materials through your local recycling depot or by placing them in appropriate collection containers.
- If you wish to discard this product, please contact your local authorities and ask for the correct method of disposal.

WARNING

- When you dispose of your old refrigerators and freezers, remove any doors. Children can suffocate if they get trapped inside.
- This appliance is not intended for use by persons (including children) with reduced physical, sensory or mental capabilities, or lack of experience and knowledge, unless they have been given supervision or instruction concerning use of the appliance by a person responsible for their safety. Children should be supervised to ensure that they do not play with the appliance.
- Do not use a steam cleaner. If live components come into contact with condensing steam, they may short-circuit or cause an electric shock.
- Do not use mechanical devices or other means to accelerate the defrosting process other than those recommended by the manufacturer.
- This appliance contains insulation formed with flammable blowing gases. Avoid safety hazards by carefully disposing of this appliance.
- If pressurised aerosol containers bear the word 'flammable' and/or a small flame symbol, do not store them inside any refrigerator or freezer. If you do so you may cause an explosion.



R600a refrigerant warning

- This appliance contains flammable R600a refrigerant. Avoid safety hazards by carefully installing, handling, servicing and disposing of this appliance. If your appliance contains R600a it will be indicated on the rating plate inside the appliance.
- Ensure that the tubing of the refrigerant circuit is not damaged during transportation and installation.
- In the event any damage accidentally occurs, keep the appliance away from open fires and any devices that produce sparks or arcs and luminaries during normal or abnormal operation, and unplug the appliance at the powerpoint. Call authorised service for necessary action and advice.
- Leaking refrigerant may ignite vent area if leak occurs.
- The room for installing appliance must be at least 1m^3 per 8g of refrigerant. The amount and type of refrigerant in the appliance can be found on the rating plate inside the appliance.
- In Queensland the authorised service person MUST hold a gas work authorisation for hydrocarbon refrigerants to carry out servicing or repairs which involve the removal of covers.
- Do not damage the refrigerant circuit.
- Do not use electrical appliances inside the food storage compartments of the appliance, unless they are of the type recommended by the manufacturer.

WARNING

It is hazardous for anyone other than an authorised service person to service this appliance. In Queensland the authorised service person MUST hold a gas work authorisation for hydrocarbon refrigerants to carry out servicing or repairs which involve the removal of covers.

WARNING

Stable Footing

When your refrigerator is in place, you need to stabilise it. Lift the front of the refrigerator to take the weight off each stability foot and make small quarter turns to each foot until it is in firm contact with the floor. If you intend to move the refrigerator, remember to wind up each foot so that you can move it freely. Repeat the process of the foot adjustment once you have settled on the new location of the refrigerator.

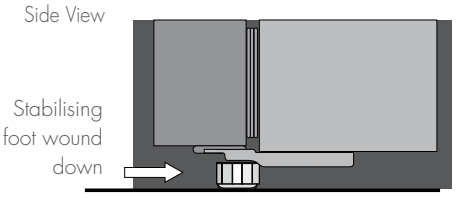

GENERAL WARNINGS

Read the following carefully to avoid damage or injury.

⃠ This symbol indicates never to do this

✓ This symbol indicates always do this

It is important to use your refrigerator safely. Check these safety points before using your refrigerator.

- ✓ The appliance must be plugged into its own dedicated 220-240V, 50Hz AC electrical outlet.
- ✓ The plug must be accessible when the refrigerator is in position.
- ✓ It is essential the powerpoint is properly earthed to ground. Consult a qualified electrician if you are unsure.
- ⃠ Don't use extension cords or adapter plugs with this refrigerator.
- ✓ If the supply cord is damaged, it must be replaced by the manufacturer, its service agent or similarly qualified persons in order to avoid a hazard.
- ✓ Unplug the appliance before cleaning and before changing the light bulb (when fitted) to avoid electric shock.
- ⃠ Never unplug the refrigerator by pulling the electrical cord as this may damage it. Grip the plug firmly and pull straight out.
- ✓ Choose a location for your refrigerator that isn't too cold. The ambient room temperature should be above 10°C.
- ✓ Stand your refrigerator in a dry place – avoid areas of high moisture or humidity.
- ⃠ Don't put the refrigerator in frosty or unprotected areas like a garage or on the verandah.
- ⃠ Don't plug your refrigerator into a timer fitted to the powerpoint.
- ⃠ Do not put the refrigerator in direct sunlight, near stoves, fires or heaters.
- ⃠ Do not put the refrigerator on an uneven surface.
- ⃠ Do not store flammable materials on or under the appliance, e.g. aerosols.
- ⃠ Do not store explosive substances such as aerosol cans with a flammable propellant in this appliance.
- ⃠ Never store fizzy drinks in the freezer compartment.
- ⃠ Never try to repair the refrigerator yourself, only use a qualified or authorised service person for repairs.
- ⃠ Never use electric heaters or dryers to defrost the freezer because you can receive an electric shock.
- ✓ When transporting and installing the refrigerator, care should be taken to ensure that no parts of the refrigerating circuit are damaged.
- ✓ Keep ventilation openings in the appliance enclosure or in the built-in structure clear of obstruction.
- ✓ When installed correctly, your refrigerator should:
  – Have adequate space at the back and sides for air circulation (refer to page 5).
  – Be vertically aligned to the surrounding cupboards.
  – Have doors that will self-close from a partially open position.

NOTE: You must read these warnings carefully before installing or using the refrigerator. If you need assistance, contact your Customer Care Department. The manufacturer will not accept liability, should these instructions or any other safety instructions incorporated in this book be ignored.

INSTALLATION

Clean the refrigerator thoroughly according to instructions and wipe away any dust that has accumulated during shipping.

Check that the floor is level. If it is not, adjust the stabilising foot so that the refrigerator is level and stable.

We recommend that the refrigerator be turned on and left to run for two to three hours before placing any food inside it. This will allow you to check that it is operating properly and there is adequate cool air in the freezer.

Installation clearances

- Allow a minimum of 30mm clearance on both sides of the refrigerator.
- Allow a minimum of 50mm clearance at the back of the refrigerator.
- Allow a minimum of 50mm (X) clearance above the refrigerator.
- If you do not have above cupboard with a rear gap of minimum 100mm (Y), recommended clearance at the top of the refrigerator is 90mm (X).
- When positioned in a corner, the clearance must be at least 300mm on the hinge side to allow the door to open smoothly so that bins and shelves can be removed easily. For easy removal of Crisper it is recommended to remove bottle door bin first if minimum clearance in the corner on hinge side is less than 350mm.

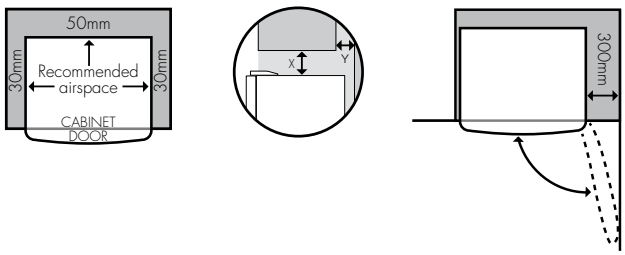

NOTE: Refrigerator doors on all models are designed to sit proud of cabinetry (not flush). The refrigerator should be placed against a wall of cabinetry and the clearance between the rear of the refrigerator and the wall should not be greater than 75mm.

Initial start up

When in operation, the outside of the refrigerator will feel warm, particularly at start up. This is normal.

Avoid placing food against air outlets as this will impede air circulation.

A light frosting will occasionally occur on the cold interior of the freezer if the door is opened frequently. This is normal and the frost will disappear after a few days in most climates.

Make sure that the freezer and fresh food doors are fully closed after you have loaded or removed food from these compartments. If the doors are left partly opened, a heavy frost will coat the inside of the freezer. If this occurs, remove the frost. Ensure that all doors are properly closed to prevent frost from reappearing.

Your refrigerator uses energy efficient components that may produce different noises from your old refrigerator. Occasionally, a gurgling sound of refrigerant flowing or sound of parts expanding or contracting can be heard. These noises are quite normal.

Cleaning

Exterior

Clean the refrigerator with only lukewarm soapy water and a soft cloth. Rinse with clean water and then wipe the surface with a soft clean cloth to remove any soap residue.

Interior

Clean the refrigerator interior regularly. Turn power off. Wipe the interior with a soft cloth and lukewarm soapy water. Thoroughly dry all surfaces and removable parts. Avoid getting water on the refrigerator controls. If you have taken out any removable parts, replace them and switch on the power before re-stocking the refrigerator. Wipe away thoroughly any food spills.

Keep door seals clean

Ensure that the door seals are always clean. Sticky food and drinks can cause seals to adhere to the cabinet and may cause the seal to tear when opening the door. Wash seals with lukewarm soapy water. Rinse thoroughly and dry.

⚠ CAUTION

Never use hot water, solvents, commercial kitchen cleaners, aerosol cleaners, metal polishers, caustic or abrasive cleaners or scourers to clean the appliance as they will damage it. Many commercially available cleaning products and detergents contain solvents that will damage your refrigerator. When cleaning, use only a soft cloth and lukewarm soapy water.

BOTTOM FREEZER FEATURES

WBB3400PA, WBB3400WA,
WBB3700PA, WBB3700WA

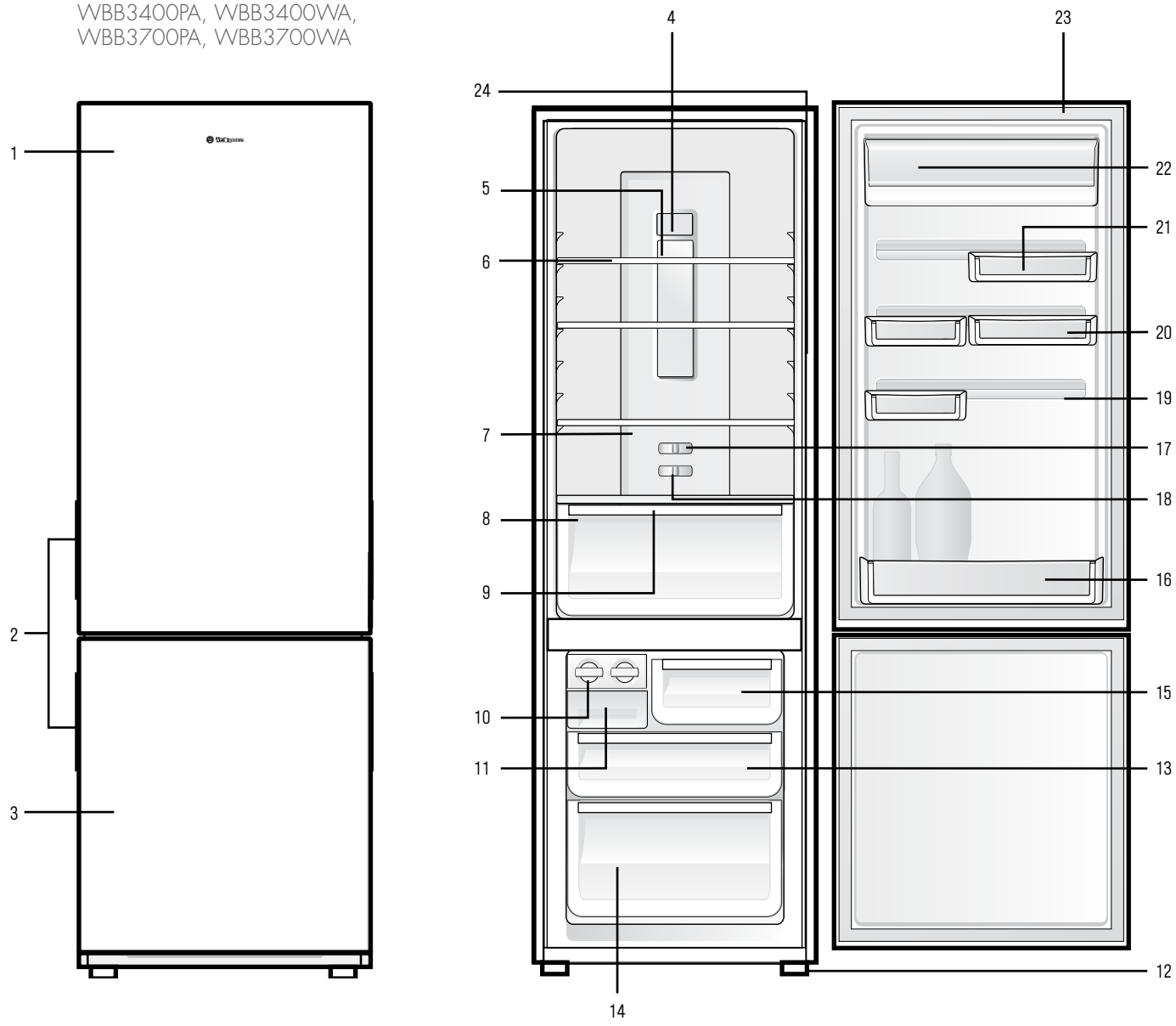

The details of the refrigerator feature:

1 Food Door
2 Door Handles (Pocket Handle)
3 Freezer Door
4 Deodoriser Cover
5 Refrigerator Light
6 Adjustable Glass Shelves
7 Multiflow
8 Crisper
9 Humidity Slide
10 Twist Ice and Serve
11 Ice Storage Bin
12 Adjustable Feet
13 Freezer Drawer (Mid)
14 Freezer Drawer (Bottom)
15 Meat Drawer
16 Bottle Door Bins
17 Temperature Control (Refrigerator)
18 Temperature Control (Freezer)
19 Slide Rails
20 Door Bins
21 Egg Tray
22 Dairy Bin
23 Gaskets
24 Door Alarm

TEMPERATURE CONTROL

Temperature control

Set the temperature by using the slide temperature control in the main temperature control at slide temperature control of the refrigerator compartment. When you first turn on the refrigerator, set both the refrigerator and freezer temperature control to MID.

TIPS AND INFORMATION

Changing settings

When you change the temperature settings, make small adjustments and wait 24 hours before assessing whether you need to make any further changes.

Refrigerator temperature adjustment

1. Select the refrigerator control.
2. Slide the control to the right to set Colder.
3. Slide the control to the left to set Less Cold.

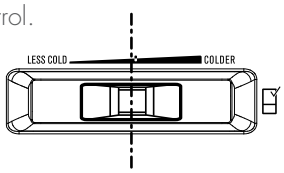

Adjusting the freezer temperature

1. Select the freezer control.
2. Slide the control to the right to set Colder.
3. Slide the control to the left to set Less Cold.

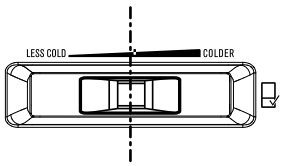

TIPS AND INFORMATION

Setting the freezer temperature to the lowest is not recommended for normal or very hot climate condition as this will limit the cooling capacity to other sections of the refrigerator. In a very cold climate, the freezer will need to be set colder.

Door alarm

If the refrigerator door is left open longer than two minutes, a buzzer will sound. Re-set the alarm by pressing the light switch.

LED lighting

Your refrigerator is fitted with long life LED lighting. In the unlikely event the LED lights should ever fail, then the LED lights need to be serviced by a qualified technician. Refer to page 11 for contact details.

FEATURES

This section tells you how to make the most of the many useful features of the refrigerator and how to clean them. You can adjust the refrigerator bins to meet different storage needs.

Door storage bins

The Refrigerator has door storage bins. You can adjust the refrigerator bins to meet different storage needs. All the door bins are completely removable for cleaning. If you want to remove or adjust a bin, lift and tilt to remove. To replace, tilt the top and push bin down until the support lugs lock it in place.

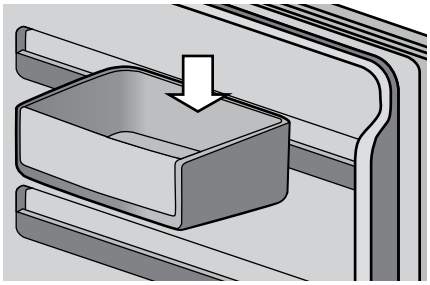

Store safe compartment (where fitted)

You can use this compartment to store food and other items. To operate lock, push up to open and down to lock.

Crisper bin

Storing vegetables

Use the crisper bin to store vegetables, fruits or small items. You can adjust the humidity inside the bin by sliding the humidity control.

Storing fruits and small items

You can store fruits in the crisper bin, but do remember to lower the humidity via the humidity control. The humidity can be adjusted by the sliding the lever on the humidity control.

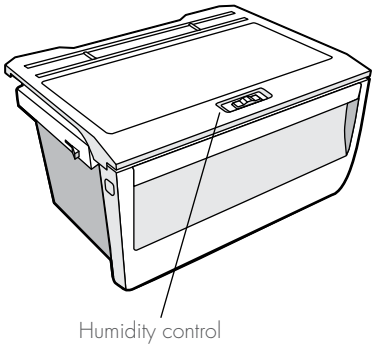

Deodoriser

Your refrigerator is fitted with a deodoriser to assist with the removal of food odours inside your refrigerator. Keeping the food covered and wrapping it in plastic will also help to reduce the odours inside your refrigerator.

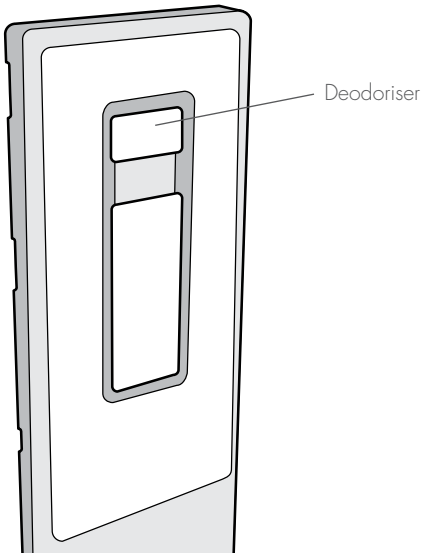

TROUBLESHOOTING

If you think something may be wrong with your refrigerator, you can carry out some easy checks before calling for service. You may locate the problem, sparing yourself from inconvenience, saving time and money.

PROBLEM	SOLUTION
When your appliance is not operating	• Check that the power cord is plugged into the power outlet properly and that the outlet is switched 'ON'.
	• Try running another appliance from the power outlet. If no power is coming from the outlet you may have blown a fuse or tripped a circuit of your household power supply.
	• Try adjusting the temperature control to a slightly "colder" position.
	• It is normal for the freezer fan NOT to operate during the automatic defrost cycle, or for a short time after the appliance is switched on.
When there is refrigerator/ freezer noise	Modern refrigerators/freezers with increased storage capacity use high speed compressors. These can provide a seemingly high level of sound which is quite normal. Normal operational sounds include: • Occasional gurgling, similar to water boiling. • Air flow noise (air circulates because of a small fan). • A popping noise heard during automatic defrost.
	Other strange sounds may mean that you need to check and take action. For example, noises may mean that: • The cabinet is not level. • The floor is uneven or weak. • Bottles are badly placed and rattling. • There are vibrations from an object on top of or behind or beside the refrigerator. • The back of the refrigerator cabinet is touching the wall.
	Remember it is quite normal for noise to seem louder when the refrigerator starts operating, or during quieter periods such as night time.
If there are odours inside the appliance	• The interior may need cleaning.
	• Some foods produce odours.
	• Some containers and wrapping can cause odours.
	• Ask yourself if the odour started about the same time you started storing something unusual.

PROBLEM	SOLUTION
When the motor seems to run more than expected	Your new appliance provides you with large capacities in both the refrigerator section and the separate freezer. It is normal for the motor to operate frequently. However, to keep operation to a minimum, check the following: • Are doors kept open too long or too often? • Are controls set too cold? Refer to page 7 "Controlling temperature". • Have large amounts of warm food just recently been stored? Summer, festive seasons and holidays usually mean a lot more work for your appliance.
	• If the day is hot or the room is very warm, the appliance will need to run more than normal.
	• The appliance will run more than normal just after you install it or when it has been turned off for a long time.
If the temperature in the refrigerator is too warm	• Check that the appliance has enough clearance at the sides, back and top. Refer to page 5 "Installing your new appliance".
	• Refer to page 7 "Controlling temperature".
	• You may have kept the door open too long or too frequently.
	• Food containers or packaging may be holding a door open.
If the temperature in the refrigerator is too cold	• Refer to page 7 "Controlling temperature".
	• Increase the temperature to avoid high energy consumption.
If heavy frosting occurs in the freezer	Make sure you fully close the freezer and fridge doors. If the doors are left partly open a heavy frost will coat the inside of the freezer. If a frost develops, remove it. Take care to properly close the doors and the frost will not reoccur.
If water drips on the floor	The defrost water tray, (located on the compressor at the back of the cabinet), may not be properly positioned, or the drain tube may not be properly positioned to direct water into this tray. You may need to pull the refrigerator away from the wall to check the tray and tube.
When temperature is hot/warm on the outside and rear side of the Fridge	In normal operation, the fridge transfers heat from inside to outside of the cabinet. It is normal for the side and rear of the fridge to feel warm/ hot while operating. This will be more noticeable during start up and hot ambient conditions.

If you still require service

If you have a problem, and the problem persists after you have made the checks mentioned above, contact your nearest Electrolux approved Service Centre or the dealer you bought the refrigerator from. Be ready to quote the model number, 9-digit PNC and 8-digit serial number, which is stated on the label inside the refrigerator compartment.

NOTES

Electrolux Warranty

FOR SALES IN AUSTRALIA AND NEW ZEALAND
APPLIANCE: REFRIGERATION

This document sets out the terms and conditions of the product warranties for Electrolux Appliances. It is an important document. Please keep it with your proof of purchase documents in a safe place for future reference should you require service for your Appliance.

1. In this warranty:
   (a) 'acceptable quality' as referred to in clause 10 of this warranty has the same meaning referred to in the ACL;
   (b) 'ACL' means Schedule 2 to the Competition and Consumer Act 2010;
   (c) 'Appliance' means any Electrolux product purchased by you and accompanied by this document;
   (d) 'ASC' means Electrolux authorised service centres;
   (e) 'Electrolux' means Electrolux Home Products Pty Ltd of 163 O'Riordan Street, Mascot NSW 2020, ABN 51 004 762 341 in respect of Appliances purchased in Australia and Electrolux (NZ) Limited (collectively 'Electrolux') of 3-5 Niall Burgess Road, Mount Wellington, in respect of Appliances purchased in New Zealand;
   (f) 'major failure' as referred to in clause 10 of this warranty has the same meaning referred to in the ACL and includes a situation when an Appliance cannot be repaired or it is uneconomic for Electrolux, at its discretion, to repair an Appliance during the Warranty Period;
   (g) 'Warranty Period' means the Appliance is warranted against manufacturing defects in Australia and New Zealand for 24 months and for the Appliance's compressor, condenser, evaporator and drier, an additional 36 months parts only warranty applies, following the date of original purchase of the Appliance;
   (h) 'you' means the purchaser of the Appliance not having purchased the Appliance for re-sale, and 'your' has a corresponding meaning.
2. This warranty only applies to Appliances purchased and used in Australia or New Zealand and used in normal domestic applications and is in addition to (and does not exclude, restrict, or modify in any way) any non-excludable statutory warranties in Australia or New Zealand.
3. During the Warranty Period Electrolux or its ASC will, at no extra charge if your Appliance is readily accessible for service, without special equipment and subject to these terms and conditions, repair or replace any parts which it considers to be defective. Electrolux or its ASC may use remanufactured parts to repair your Appliance. You agree that any replaced Appliances or parts become the property of Electrolux. This warranty does not apply to light globes, batteries, filters or similar perishable parts.
4. Parts and Appliances not supplied by Electrolux are not covered by this warranty.
5. To the extent permitted by law, you will bear the cost of transportation, travel and delivery of the Appliance to and from Electrolux or its ASC. If you reside outside of the service area, you will bear the cost of:
   (a) travel of an authorised representative;
   (b) transportation and delivery of the Appliance to and from Electrolux or its ASC.

   In all instances, unless the Appliance is transported by Electrolux or an Electrolux authorised representative, the Appliance is transported at the owner's cost and risk while in transit to and from Electrolux or its ASC.
6. Proof of purchase is required before you can make a claim under this warranty.
7. You may not make a claim under this warranty unless the defect claimed is due to faulty or defective parts or workmanship. Electrolux is not liable in the following situations (which are not exhaustive):
   (a) the Appliance is damaged by:
      (i) accident
      (ii) misuse or abuse, including failure to properly maintain or service
      (iii) normal wear and tear
      (iv) power surges, electrical storm damage or incorrect power supply
      (v) incomplete or improper installation
      (vi) incorrect, improper or inappropriate operation
      (vii) insect or vermin infestation
      (viii) failure to comply with any additional instructions supplied with the Appliance;
   (b) the Appliance is modified without authority from Electrolux in writing;
   (c) the Appliance's serial number or warranty seal has been removed or defaced;
   (d) the Appliance was serviced or repaired by anyone other than Electrolux, an authorised repairer or ASC.
8. This warranty, the contract to which it relates and the relationship between you and Electrolux are governed by the law applicable where the Appliance was purchased. Where the Appliance was purchased in New Zealand for commercial purposes the Consumer Guarantee Act does not apply.
9. To the extent permitted by law and subject to your non-excludable statutory rights and warranties, Electrolux excludes all warranties and liabilities (other than as contained in this document) including liability for any loss or damage whether direct or indirect arising from your purchase, use or non use of the Appliance.
10. For Appliances and services provided by Electrolux in Australia, the Appliances come with a guarantee by Electrolux that cannot be excluded under the ACL. You are entitled to a replacement or refund for a major failure and for compensation for any other reasonably foreseeable loss or damage. You are also entitled to have the Appliance repaired or replaced if the Appliance fails to be of acceptable quality and the failure does not amount to a major failure.
    The benefits to you given by this warranty are in addition to your other rights and remedies under a law in relation to the Appliances or services to which the warranty relates.
11. At all times during the Warranty Period, Electrolux shall, at its discretion, determine whether repair, replacement or refund will apply if an Appliance has a valid warranty claim applicable to it.
12. For Appliances and services provided by Electrolux in New Zealand, the Appliances come with a guarantee by Electrolux pursuant to the provisions of the Consumer Guarantees Act, the Sale of Goods Act and the Fair Trading Act.
13. To enquire about claiming under this warranty, please follow these steps:
    (a) carefully check the operating instructions, user manual and the terms of this warranty;
    (b) have the model and serial number of the Appliance available;
    (c) have the proof of purchase (e.g. an invoice) available;
    (d) telephone the numbers shown below.
14. You accept that if you make a warranty claim, Electrolux and its ASC may exchange information in relation to you to enable Electrolux to meet its obligations under this warranty.

Important Notice

Before calling for service, please ensure that the steps listed in clause 13 above have been followed.

FOR SERVICE or to find the address of your nearest state service centre in Australia **PLEASE CALL 13 13 49** For the cost of a local call (Australia only)	**SERVICE AUSTRALIA** Electrolux ELECTROLUX HOME PRODUCTS www.electrolux.com.au	**FOR SPARE PARTS** or to find the address of your nearest state spare parts centre in Australia **PLEASE CALL 13 13 50** For the cost of a local call (Australia only)
FOR SERVICE or to find the address of your nearest authorised service centre in New Zealand **FREE CALL 0800 10 66 10** (New Zealand only)	**SERVICE NEW ZEALAND** Electrolux ELECTROLUX (NZ) Limited www.electrolux.co.nz	**FOR SPARE PARTS** or to find the address of your nearest state spare parts centre in New Zealand **FREE CALL 0800 10 66 20** (New Zealand only)

For more information on all Westinghouse appliances,
or for dimension and installation information, call into your retailer,
phone or email our customer care team or visit our website:

AUSTRALIA
phone: 1300 363 640
fax: 1800 350 067
email: customercare@electrolux.com.au
web: www.westinghouse.com.au

NEW ZEALAND
phone: 0800 436 245
fax: 0800 225 088
email: customercare@electrolux.co.nz
web: www.westinghouse.co.nz



TOP SERVICE
Top Service encompasses the after sales service provided by The Electrolux Group to consumers including delivery, home service and spare parts.

Westinghouse. We are part of the Electrolux family.
Share more of our thinking at www.electrolux.com

P/No. 811 948 421

© 2014 Electrolux Home Products Pty Ltd ABN 51 004 762 341

WMAN_FRIBM_Oct14

Westinghouse