

PRO 48 Refrigeration Design Guide

SUB-ZERO

Contents

3 PRO 48 Refrigeration

4 Specifications

7 Warranty

Features and specifications are subject to change at any time without notice. Visit subzero.com/specs for the most up-to-date information.

IMPORTANT NOTE: Throughout this guide, dimensions may vary by ± 1/8" (3). Dimensions in parentheses are millimeters unless otherwise specified.

Model 648PROG.

PRO 48 Refrigeration

Freshness finds unmistakable expression in the Sub-Zero PRO 48. An 800-pound monument to food preservation—equal parts sculpted metal design statement and culinary secret weapon. Its vast interior, like its bold exterior, is crafted of stainless steel. The PRO 48 is available with or without a glass door and may be either built in or freestanding.

PRO 48 MODELS

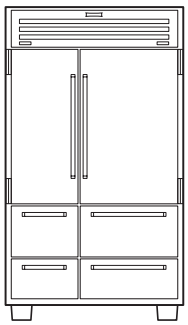

648PRO

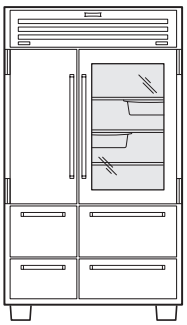

648PROG

KEY FEATURES

- Can be used freestanding or installed as a standard or flush built-in application.
- Stainless steel interior as well as exterior.
- Handles coordinate with handles of Wolf ranges.
- Dual refrigeration system enhanced with triple evaporators allow independent control of storage conditions in refrigerator cabinet and drawer compartments.
- Advanced water filtration system.
- Slide-out stainless steel bins fit neatly under refrigerator glass shelves.
- Exterior temperature display.
- Flip-up grille provides easy access for quick routine maintenance.
- Star-K certified.

Overall Dimensions

PRO 48 MODELS

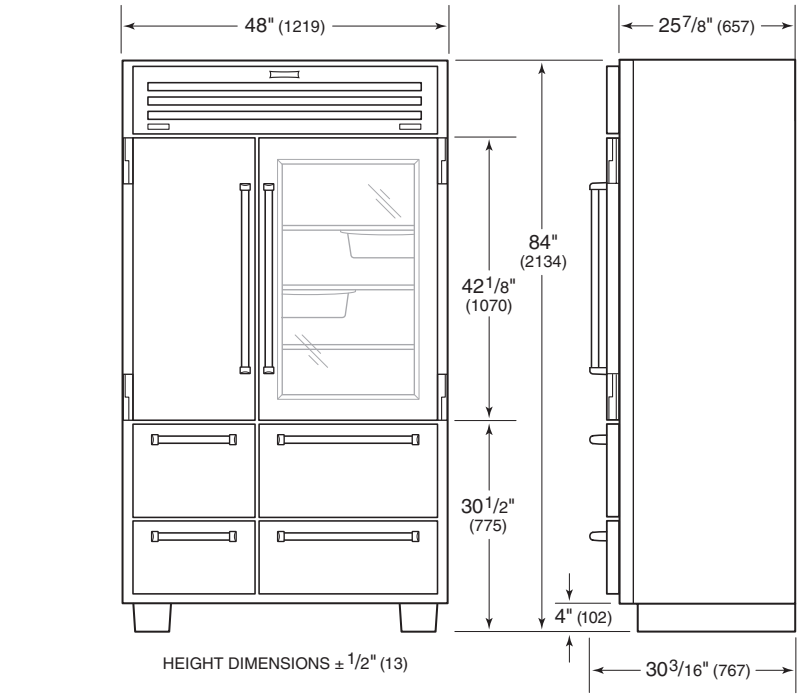

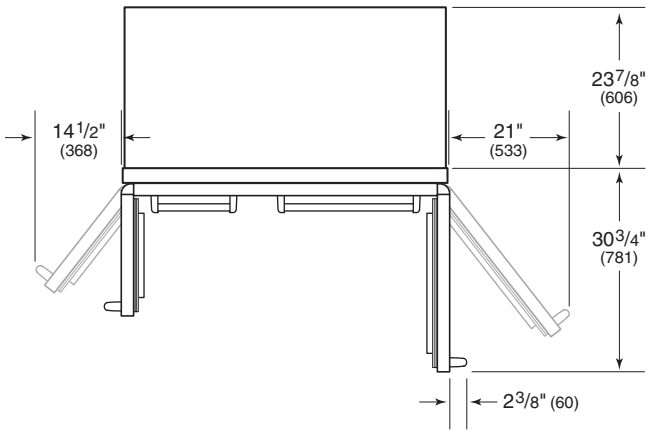

SPECIFICATIONS		
INTERIOR CAPACITY	R CU FT (L)	F CU FT (L)
648PRO, 648PROG	18.4 (521)	11.7 (331)
SHIPPING WEIGHT		**LB (KG)**
648PRO		860 (390)
648PROG		875 (397)

Models 648PRO and 648PROG.

Opening Dimensions

STANDARD AND FLUSH INSTALLATION

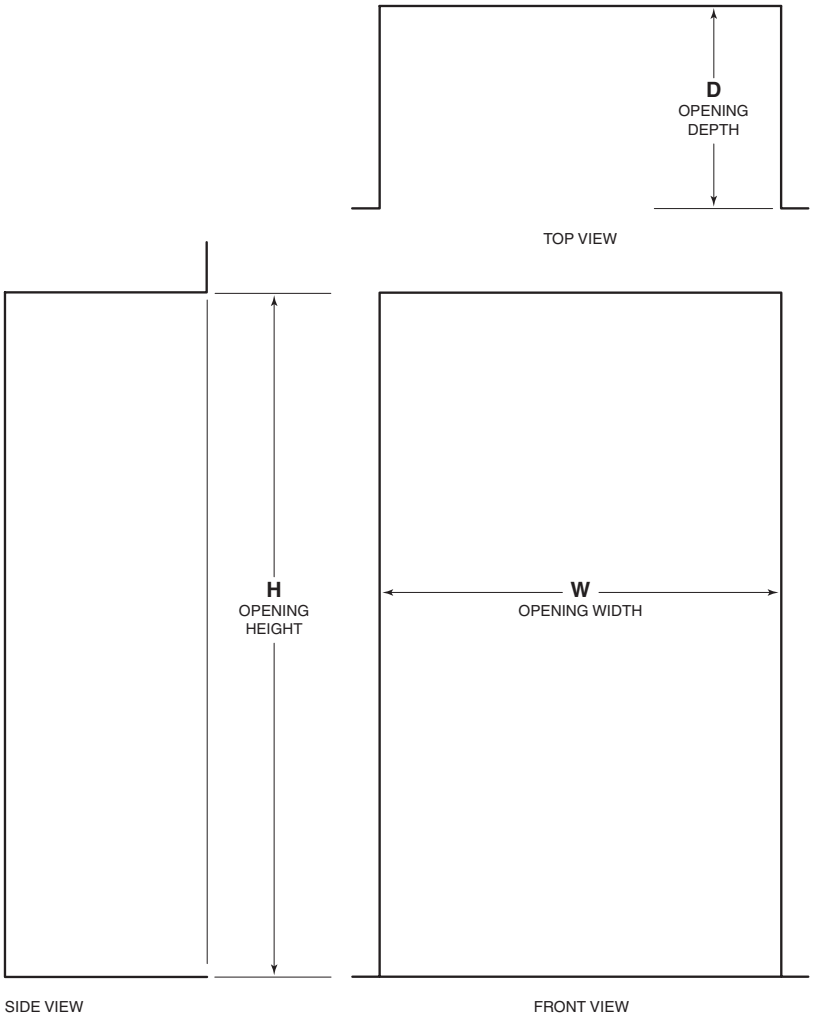

OPENING DIMENSIONS			
INSTALLATION	W	H	D
Standard	47 1/2" (1206)	83 3/4" (2127)	24" (610)
Flush	48" (1219)	84 1/8" (2137)	26" (660)

For standard built-in installations, the face frame of the unit will extend 2" (51) beyond cabinetry. For flush installations, the front of the face frame will be flush with surrounding cabinetry.

Electrical

The electrical supply should be located within the shaded area shown in the illustration below. A separate circuit, servicing only this appliance is required. A ground fault circuit interrupter (GFCI) is not recommended and may cause interruption of operation.

Installation must comply with all applicable electrical codes.

ELECTRICAL REQUIREMENTS	
Electrical Supply	115 VAC, 60 Hz
Service	15 amp
Receptacle	3-prong grounding-type

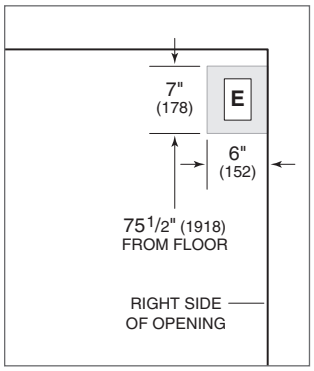

Electrical supply location.

Plumbing

The water supply line should be located within the shaded area shown in the illustration below. The water supply line should be connected to the house supply with an easily accessible shut-off valve. Do not use self-piercing valves. The water supply line must not interfere with installation of the anti-tip bracket.

A reverse osmosis system can be used provided there is constant water pressure of 35–120 psi (2.4–8.3 bar) supplied to the unit at all times. A copper line is not recommended for this application.

Installation must comply with all applicable plumbing codes.

PLUMBING REQUIREMENTS	
Water Supply	1/4" OD copper, braided stainless steel or PEX tubing
Pressure	35–120 psi (2.4–8.3 bar)
Excess Line for Connection	36" (914)

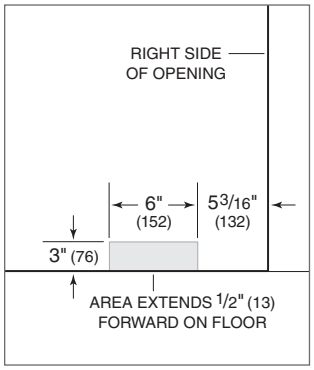

Water supply location.

Sub-Zero, Sub-Zero & Design, Dual Refrigeration, Constant Care, The Living Kitchen, Great American Kitchens The Fine Art of Kitchen Design, and Ingredients are registered trademarks and service marks of Sub-Zero, Inc. Wolf, Wolf & Design, Wolf Gourmet, W & Design and the color red as applied to knobs are registered trademarks and service marks of Wolf Appliance, Inc. (collectively, the “Company Marks.”) All other trademarks or registered trademarks are property of their respective owners in the United States and other countries.

Sub-Zero Residential Limited Warranty

FOR RESIDENTIAL USE

FULL TWO YEAR WARRANTY*

For two years from the date of original installation, this Sub-Zero product warranty covers all parts and labor to repair or replace, under normal residential use, any part of the product that proves to be defective in materials or workmanship. All service provided by Sub-Zero under the above warranty must be performed by Sub-Zero factory certified service, unless otherwise specified by Sub-Zero, Inc. Service will be provided during normal business hours.

FULL FIVE YEAR SEALED SYSTEM WARRANTY

For five years from the date of original installation, this Sub-Zero product warranty covers all parts and labor to repair or replace, under normal residential use, these parts that prove to be defective in materials or workmanship: compressor, condenser, evaporator, drier and all connecting tubing. All service provided by Sub-Zero under the above warranty must be performed by Sub-Zero factory certified service, unless otherwise specified by Sub-Zero, Inc. Service will be provided during normal business hours.

LIMITED TWELVE YEAR SEALED SYSTEM WARRANTY

For twelve years from the date of original installation, Sub-Zero will repair or replace the following parts that prove to be defective in materials or workmanship: compressor, condenser, evaporator, drier and all connecting tubing. If the owner uses Sub-Zero factory certified service, the service provider will repair or replace these parts with the owner paying for all other costs, including labor. If the owner uses non-certified service, the owner must contact Sub-Zero, Inc. (using the information below) to receive repaired or replacement parts. Sub-Zero will not reimburse the owner for parts purchased from non-certified service or other sources.

TERMS APPLICABLE TO EACH WARRANTY

The warranty applies only to products installed for normal residential use. The warranty applies only to products installed in any one of the fifty states of the United States, the District of Columbia or the ten provinces of Canada. This warranty does not cover any parts or labor to correct any defect caused by negligence, accident or improper use, maintenance, installation, service or repair.

THE REMEDIES DESCRIBED ABOVE FOR EACH WARRANTY ARE THE ONLY ONES THAT SUB-ZERO, INC. WILL PROVIDE, EITHER UNDER THIS WARRANTY OR UNDER ANY WARRANTY ARISING BY OPERATION OF LAW. SUB-ZERO, INC. WILL NOT BE RESPONSIBLE FOR ANY CONSEQUENTIAL OR INCIDENTAL DAMAGES ARISING FROM THE BREACH OF THIS WARRANTY OR ANY OTHER WARRANTY, WHETHER EXPRESS, IMPLIED OR STATUTORY.

Some states do not allow the exclusion or limitation of incidental or consequential damages, so the above limitation or exclusion may not apply to you. This warranty gives you specific legal rights and you may also have other legal rights that vary from state to state.

To receive parts and/or service and the name of Sub-Zero factory certified service nearest you, contact Sub-Zero, Inc., P.O. Box 44848, Madison, WI 53744; check the contact & support section of our website, subzero.com, email us at customerservice@subzero.com or call 800-222-7820.

*Stainless steel (doors, panels, handles, product frames and interior surfaces) are covered by a limited 60-day parts and labor warranty for cosmetic defects.

*Replacement water filters and air purification cartridges are not covered by the product warranty.

SUB-ZERO®



SUB-ZERO, INC. P.O. BOX 44848 MADISON, WI 53744 SUBZERO.COM 800.222.7820

SZPRODG 9/2013