TRICITY BENDIX

ECR506

REFRIGERATOR

Download from Www.Somanuals.com. All Manuals Search And Download.

WARNINGS



IMPORTANT - PLEASE READ THIS INSTRUCTION BOOK BEFORE USING THE APPLIANCE

It is most important that this instruction book should be retained with the appliance for future reference. Should the appliance be sold or transferred to another owner, or should you move house and leave the appliance, always ensure that the instruction book is supplied with the appliance in order that the new owner can get to know the functioning of the appliance and the relevant warnings.

These warnings are provided in the interest of safety. You MUST read them carefully before installing or using the appliance.

- This product is designed to be operated by adults. Children should not be allowed to tamper with the controls or play with the product.
- Any electrical work required to install this appliance should be carried out by a qualified electrician or competent person.
- This product should be serviced by an authorised Service Centre and only genuine spare parts should be used.
- It is dangerous to alter the specifications or modify the product in any way.
- Care must be taken to ensure that the appliance does not stand on the electrical supply cable.
- Domestic fridge/freezers are designed to be used specifically for the storage of edible foodstuffs only.
- There are working parts in this product which heat up. Always ensure that there is adequate ventilation as a failure to do this will result in possible food loss. See Installation instructions.
- Parts which heat up should not be exposed. Wherever possible, the back of the appliance should be close to a wall but leaving the required distance for ventilation as stated in the installation instructions.
- Before defrosting, cleaning or maintenance work is carried out, be sure to switch off the appliance and unplug it.
- Frozen food must NOT be refrozen once it has thawed out.
- Do not place carbonated or fizzy drinks in the freezer as it creates pressure on the container which may cause it to explode, resulting in damage to the appliance.
- The cooling plate or refrigerated freezer shelves in this appliance contain channels through which the refrigerant passes. If these are punctured this would cause substantial damage to the appliance and result in food loss. DO NOT USE SHARP INSTRUMENTS to scrape off frost or ice. Under NO circumstances should solid ice be forced off the lining or shelves. Solid ice should be allowed to thaw when defrosting the appliance. See Defrost instructions.
- The appliance should be left for 2 hours after installation before it is turned on, in order to allow the refrigerant to settle.
- This appliance is heavy. Care should be taken when moving it.
- Do not remove items from the freezer compartment if your hands are damp/wet, as this could cause skin abrasions or 'frost/freezer burns'.
- Ice lollies can cause 'frost/freezer burns' if consumed straight from the freezer.
- Manufacturer's food storage recommendations should be strictly adhered to. Refer to relevant instructions.
- Under no circumstances should you attempt to repair the appliance yourself. Repairs carried out by inexperienced persons may cause injury or serious malfunctioning. Refer to your local Service Centre and always insist on genuine spare parts.
- Occasionaly during the operation the outside front edges of the appliance may feel quite warm to touch, this is normal.

Download from Www.Somanuals.com. All Manuals Search And Download.

CONTENTS

INSTALLATION ..... **PAGE 3**

DOOR REVERSAL ..... **PAGE 3**

ELECTRICAL CONNECTIONS ..... **PAGE 4**

HOW TO USE THE TEMPERATURE CONTROL DIAL ..... **PAGE 5**

YOUR REFRIGERATOR ..... **PAGE 5**

FRESH FOOD STORAGE GUIDE ..... **PAGE 6**

FROZEN FOOD COMPARTMENT ..... **PAGE 6**

DEFROSTING YOUR REFRIGERATOR ..... **PAGE 7**

HEALTH AND SAFETY GUIDELINES ..... **PAGE 7**

CLEANING AND CARE ..... **PAGE 8**

WHAT HAPPENS IF SOMETHING IS NOT WORKING? ..... **PAGE 8**

GENERAL FEATURES (SEE ILLUSTRATION A)

1. FROZEN FOOD COMPARTMENT **PAGES 9 & 10**
2. THERMOSTAT CONTROL
3. SALAD DRAWER COVER
4. SALAD DRAWER
5. LEVEL ADJUSTER
6. BOTTLE STRAP
7. DAIRY COMPARTMENT

Download from Www.Somanuals.com. All Manuals Search And Download.

INSTALLATION

1. This appliance is designed to operate in ambient temperatures between 10°C (50°F) and 32°C (90°F). It should be located in a dry atmosphere, out of direct sunlight and away from extreme temperature e.g. not next to a cooker or other sources of direct heat, or in a very cold room e.g. an outhouse, where the temperatures may fall below 10°C (50°F).

2. The appliance should be gently pushed into place until the table top rear wall spacer touches the wall, see Fig 1.
When in position a 20mm (3/4") clear space above the appliance should be maintained. If a clear space of 20mm (3/4") above the appliance is not available clearances of 25mm (1") should be maintained on both sides of the appliance, this is to provide sufficient air circulation. Always ensure that the ventilation is kept clear from blockage by teatowels etc., because this will cause the appliance to work incorrectly.

3. Your appliance will be heavy when loaded with food and must therefore be stood on a strong firm floor which should also be level. Adjust the level by screwing out the appropriate level adjusters in the feet using your fingers or a suitable spanner (see fig. 2).
Make sure the appliance is upright and all adjusters are in firm contact with the floor, so that the cabinet doesn't rock in any direction.

4. Before switching on, make sure that the voltage of your electricity supply is the same as that indicated on the rating plate. This is located inside the cabinet behind the bottom freezer basket.

DOOR REVERSAL

If your appliance is already in use, **DISCONNECT** it from the electricity supply and remove shelves and other loose items, including food. Place frozen food in boxes wrapped in blankets or other suitable insulating material and put in a cool place.
Gently lay the appliance on its back with the top held away from the floor by at least 30cm (12"), use a stool or something similar. Make sure to use a towel or cloth at the base to protect the sides of the appliance ensuring that it does not slip. See fig. 3.

Remove level adjuster (1) from the base of the product retaining the small cup spacer which is located around the threaded portion of the adjuster. In order to remove the foot/hinge assy (2) remove the screws marked (3) see fig. 4

Remove the door by lifting it slightly and carefully sliding it down off the top hinge pin. Remove the top hinge pin (4) by removing screw (5) and transfer to the opposite side . (See fig. 5)

Refit the door by carefully sliding it onto the upper hinge pin (4). Take the bottom hinge foot assembly (2) and transfer it over to the opposite side of the cabinet being carful to retain any spacing washer fitted onto the bottom hinge pin. Push the hinge foot assembly (2) into the door bearing using the pin of the foot for location. Three holes will then line up with the hinge foot and screws (3) should be used to secure the hinge. Refit level adjuster and spacer (1) in the opposite side of the cabinet.

Stand the appliance upright

To fix the handle on the opposite side proceed as follows: (see fig 6.)

i) Protect the paintwork on the door from damage with masking tape or other suitable material while using a blunt knife or similar instrument to carefully prise out the plastic plugs from alternative handle positions on the opposite side of the door.

ii) Remove the screw covers and screws from the handle and transfer it to its new position replacing the plastic plugs into the vacated screw holes.

Finally level the appliance by means of the level adjusters (1) in the feet. - see foot adjustment below

FOOT ADJUSTMENT
Your appliance will be heavy when loaded with food and must therefore be stood on a strong firm floor. It should also be level. Adjust the level by screwing out the appropriate level adjuster at the front using your fingers or a suitable spanner (see fig 2) . Make sure the appliance is upright and both adjusters are in firm contact with the floor so that the cabinet is level and doesn't rock in any direction

Switch on and replace the food.

Download from Www.Somanuals.com. All Manuals Search And Download.

ELECTRICAL CONNECTIONS

WARNING: THIS APPLIANCE MUST BE EARTHED.
The manufacturer declines any liability should this safety measure not be observed.

ELECTRICAL REQUIREMENTS

Before switching on, make sure that the voltage of your electricity supply is the same as that indicated on the rating plate, located inside the cabinet.

WARNING! THIS APPLIANCE MUST BE EARTHED

For your convenience, this appliance comes complete with either a moulded-on or re-wireable 13 amp (BS1363) plug, protected by a 13 amp ASTA approved (BS1362) fuse.

In the event of having to change the fuse in the plug supplied, a replacement 13 amp ASTA approved (BS1362) fuse must be used.

In the case of a moulded-on plug, if a removable fuse cover is fitted, the fuse cover MUST be refitted after changing the fuse. If the fuse cover is lost or damaged the plug MUST NOT be used until a replacement is obtained.

Replacement covers are available from your local electricity shop or nearest customer service centre. The colour of the replacement fuse cover must match the colour insert or emboss on the base of the plug.

In the case of a re-wireable plug, care must be taken to ensure that the top cover is refitted without causing damage to either the top cover or base. In the event of the plug becoming damaged or cracked, it must be replaced with an equivalent 13 amp, BS1363 approved plug (ref. fig. 7) and rewired using the following procedure:-

IMPORTANT

The wires in the mains lead are coloured in accordance with the following code:

GREEN & YELLOW	: EARTH
BLUE	: NEUTRAL
BROWN	: LIVE

The wire coloured green and yellow must be connected to the terminal marked with the letter "E" or by the Earth Symbol ⏚ or coloured green or green and yellow. The wire coloured Blue must be connected to the terminal marked with the letter "N" or coloured black. The wire coloured Brown must be connected to the terminal marked "L" or coloured red.

Upon completion there must be no cut, loose or stray strands of wire present and the cord clamp must be secure over the outer sheath.

If a 13 amp (BS1363) plug is unsuitable for your sockets, the plug should be removed, (cut-off in the case of a moulded-on plug) and an appropriate plug fitted.

NOTE: Moulded plugs cannot be re-used and should be discarded if cut from a mains lead, as insertion into a 13 A socket could prove fatal.

If a non-fused plug is fitted (ref. fig. 8), the wiring must follow the above procedure and the appliance must be protected by the use of a 15amp fuse either in the adaptor or at the distribution board.

If at any time a replacement supply cord is required, the cross sectional area of its conductors must not be less than 0.75mm² and the cable clamp must be tightened so as to fully retain the new cord.

We recommend that this type of installation be checked by a fully qualified electrician, prior to use.

Conformity Declaration:

This appliance is designed to store food in and is manufactured in conformity with:

EEC Directive No. 89/109/EEC

This appliance has been designed and built in compliance with:

The "Low Voltage" EEC Directive 73/23/EEC.

The "EMC-EEC" Directive 89/336/EEC (amended by EEC Directive 93/68/EEC).

This appliance is CFC Free.

For more details, please refer to the rating plate on the appliances.

This appliance carries the CE Mark.

Download from Www.Somanuals.com. All Manuals Search And Download.

THE CONTROLS

1. The interior temperature of the refrigerator is automatically controlled by the thermostat. The control dial enables the desired degree of cooling to be selected. This is situated in the table top, see Fig 10.
The control dial is numbered ●-6. On setting ● the cooling system is switched off, but the appliance is not disconnected from the electrical supply. The highest number is the coldest and setting 3 to 4 will usually be found suitable for normal operations.
A coin is required to operate the table top mounted thermostat, the thermostat dial should be turned to align the black indicator in the knob with the required temperature setting.

2. If colder settings are selected for extra chilling effect, do not forget to turn the control dial back afterwards. The refrigerator contents may freeze if cooler temperatures are maintained for any length of time. Operating the refrigerator at colder temperatures than necessary only consumes excessive power and hence increases the running costs.

3. The choice of setting may be influenced by the frequency of door openings, the quantity of food stored, the kitchen temperature and location of the appliance. During warm weather a higher setting may be required.

YOUR REFRIGERATOR

TEMPERATURES

1. The function of a refrigerator is to reduce the development of organisms which cause decay and bacterial activity, and thus increase the storage life of food.

2. The fresh food compartment has been designed to operate between 0°C (32°F) and 5°C (41°F) and is in accordance with British and European Standards.

FRESH FOOD COMPARTMENT

1. The refrigerator is fitted with a shelf which is adjustable for the storage of different sized articles.

If your refrigerator is positioned near to a wall thereby allowing the door to open through 90° then each shelf when tilted can be removed as follows, see Fig 10.

The shelves are designed to allow maximum air circulation and therefore when placing foods on the shelves make sure a small space is left between packages.

2. The warmest area in the refrigerator is to the top of the compartment and the coolest is at the bottom of the compartment and this is where the most perishable foods should be kept.

3. Vegetables and salad foods can be stored in the salad drawer. To ensure they are maintained in a crisp condition it may be necessary to wrap some foods in polythene bags eg. lettuce, watercress or herbs.

DOOR STORAGE

1. Storing items in the door liner can eliminate searching the main compartment. The lower door shelf should be used for the storage of heavier bottles whilst remaining shelves will accommodate fat, butter, small cartons and jars etc.

2. Enclosed storage compartments may be used to store dairy products and fats.

HELPFUL HINTS WHEN BUYING FOOD

1. Always ensure that fresh food you purchase, is of a good quality and in prime condition.

2. Shop at a reliable source and buy the 'freshest' looking packages, avoid shopworn labels or produce covered in dust.

3. Avoid buying frozen food if you cannot store it straight away. The use of an insulated container is advisable. When you arrive home place the frozen food in the freezer immediately.

To obtain the best results from your appliance, neither hot foods nor liquids which may evaporate, should be placed in the larder compartment.

* Fruit and vegetables should be thoroughly cleaned and placed in the salad drawer.
* Butter and cheese should be placed in special airtight containers or wrapped in foil or polythene bags to exclude as much air as possible.
* Milk bottles should have a cap and be stored in the bottom shelf of the door.

Download from Www.Somanuals.com. All Manuals Search And Download.

FRESH FOOD STORAGE GUIDE

The recommended storage times of food are as follows:

Shelf Position	Storage Time
Top Shelves	
Fats	10 days
Hard Cheese	7-14 days
Cooked Meats, Poultry	2 days
Bacon	7 days
Milk and Cream	2-3 days
Soft Cheese	2-3 days
Eggs	2 weeks
Desserts With Cream/Custard	2 days
Pastry Products	3-4 days
Cooked Meat Pies/ Sausage Rolls	2 days
Cooked Fruit	Up to 4 days
Bottom Shelves	
Stock and Gravies	Up to 4 days
Fresh Fish	Eat same day
Fresh Meats	3 days
Fresh Poultry	2 days
Sausages	Up to 3 days
Minced Meat, Burgers	1 day
Salad Drawer	
Green Vegetables	3-5 days
Salad Vegetables	3-5 days
Fresh Fruit	5 days

FROZEN FOOD COMPARTMENT

ALL MODELS NET STORAGE CAPACITY 0.39 cuft (11L). * WEIGHT OF STORED FOOD 7.8lb(3.5kg).
*(This is a standard measurement and the actual capacity depends upon the density and sizes of food stored. The above figures are based on an average density of 0.32kg per litre).

1. This compartment is not designed to freeze fresh food or cooked food.

2. The 2 star frozen food compartment of the refrigerator is designed to maintain temperature below –12°C(10.4°F). This temperature will allow medium term storage of frozen food up to 1 month providing the correct setting has been selected.

3. The temperature inside the refrigerator and (**) -star compartment can be regulated by adjusting the defrost tray located under the (**) -star compartment. (See Fig. 11).

To obtain a lower temperature in the (**) star compartment (when frozen food is stored inside and when the ambient temperature is lower than 25°C) slightly raise the defrost tray and push it all the way in.

When frozen food is not stored in the (**) star compartment or when the ambient temperature is higher than 25°C return the defrost tray to its initial position. This reduces the temperature in the refrigerator compartment.

4. Do not place sealed containers of carbonated liquids such as fizzy drinks into the frozen food compartment as it creates pressure on the container which may cause it to explode resulting in damage to the refrigerator.

5. Water ices and ice lollies should not be consumed immediately after removal from the freezer compartment as it may result in low temperature skin abrasions.

6. Ice cubes can be made in this compartment at the normal setting and if required quickly a colder setting may be selected remembering to return to normal setting as soon as convenient.

FROZEN FOOD STORAGE

To ensure that frozen food is stored as to preserve the high quality achieved by the manufacturers, the following advice should be noted:

1. Place food in the compartment as soon as possible after purchase.

2. Always follow the instructions recommended by the manufacturer on the packet of frozen food.

3. Consume food before the "Best Before" date.

4. Any opened packets of frozen foods should be rewrapped in air tight materials to prevent surface evaporation which causes drying or "freezer burn".

IMPORTANT

If temperature rises in frozen foods because of:

a. non compliance with manufacturers instructions.

b. electric power failure or faults

then storage life may be reduced and storage times recommended may not then apply.

Any frozen food which thaws should either be used immediately or thrown away.

Download from Www.Somanuals.com. All Manuals Search And Download.

DEFROSTING YOUR REFRIGERATOR

Regular defrosting is necessary to ensure efficient operation of the refrigerator.

WE RECOMMEND YOU DEFROST FORTNIGHTLY TO ENSURE EFFICIENT OPERATION.

Frost will build in the frozen food compartment. This is due to moisture in the air which enters the refrigerator when the door is opened and moisture from the stored food.

PREPARING FOODS WHEN DEFROSTING

1. Defrosting should be carried out when stocks are low.

2. Place all foods in a compact block or a cardboard box and wrap in newspaper then in a thick rug or blanket.

3. Keep foods in a cool place.

4. Ice cream softens fairly rapidly when the temperature is allowed to rise and therefore defrosting should not be carried out while ice cream is being stored.

DEFROSTING METHOD

SWITCH OFF AT ELECTRICITY SUPPLY

1. Empty the frozen food compartment.

2. Push the defrost tray completely in.

3. Remove the plug from defrost tray, see Fig 13.

4. Place a suitable container onto the top shelf in the appliance to collect the defrost water.

5. A shallow container with hot water may be placed in the frozen food compartment and replenished with hot water if necessary.

6. Leave the refrigerator door open. The frost water will quickly melt away and collect in the container under the defrost tray.

7. When the compartment is completely free of frost, remove and empty the container holding defrosted water. also remove defrost tray.

8. The interior of the frozen food compartment and cabinet may be wiped out using a solution of bicarbonate of soda and water, and then dried as described under 'Cleaning and Care'.

9. Ensure the control dial is in its normal position. Switch ON at the electricity supply.

10. Replace all fitments and food. Close door.

HEALTH AND SAFETY GUIDELINES

Because of consumer demand, preservatives have been removed from many pre-prepared food. This together with the changes in shopping habits to a once a-week shop, mean that safe handling and storage of food is even more important than ever.

The following tips should help you to ensure that the food in your home is in as perfect condition as possible.

- Keep the time between buying chilled food and placing it in your fridge as short as possible. Tests showed that the temperature of 1 litre of orange juice rose to 22°C in an hour between the supermarket and home. It then took 11 hours to get down to 7°C in the refrigerator.
- Keep the refrigerator door closed as much as possible. Remember that warm air is flowing in as you are deciding what to have for tea!
- Do not push food together too much, try to allow air to circulate around each item.
- Cool cooked food as quickly as possible but do NOT place in the refrigerator or freezer until cool. (Leave food in a place as cool as possible in order that it can then be placed in the refrigerator or freezer as soon as possible).
- Do NOT mix raw and cooked meat, they must be in separate containers. Take care not to let the meat juices drip onto other food. If the meat does drip, remove everything and clean thoroughly.
- Do not store food uncovered.
- The best way to defrost food is to put it in the refrigerator to thaw slowly.
- Remove suspect food from your refrigerator and clean the interior with a solution of bicarbonate of soda in warm water (5ml to 0.5 litre of water).
- Never allow spillages to dry and harden.
- Ensure that food placed in the freezer is dated and labelled and used in date order to ensure that food is consumed at its best.
- It is important that food is used before its 'best before' date.

  Store eggs in the egg rack provided in the refrigerator door. Discard any broken or chipped eggs.
- Regularly check the refrigerator door seal to ensure that it is clean and free from bits and pieces.
- Always wash your hands with soapy water and dry them with a clean towel before handling food.
- Keep work surfaces clean and avoid cross contamination by not using the same work surface or knife, without washing them thoroughly in between.
- Use kitchen roll wherever possible for cleaning up food. If you use a dishcloth, be sure to boil it frequently.

Download from Www.Somanuals.com. All Manuals Search And Download.

CLEANING AND CARE

BEFORE any maintenance or cleaning work is carried out, DISCONNECT the appliance from the ELECTRICITY supply.

INTERNAL CLEANING

Clean the inside and accessories with warm water and bicarbonate of soda (5ml to 0.5 litre of water). Rinse and dry thoroughly.

NEVER USE DETERGENTS, ABRASIVE POWDERS, HIGHLY PERFUMED CLEANING PRODUCTS OR WAX POLISHES, TO CLEAN THE INTERIOR AS THESE WILL DAMAGE THE SURFACE AND LEAVE A STRONG SMELL.

Wash the outer cabinet with warm soapy water. Do NOT use abrasive products. Please Note: There are sharp edges on the underside of the product so care should be taken when cleaning.

Once or twice a year dust the condenser (black grille) and the compressor at the back of the appliance, with a brush or vacuum cleaner.

YOU MUST ENSURE THAT THE APPLIANCE IS SWITCHED OFF. An accumulation of dust will affect the performance of the appliance and cause excessive electricity consumption.

WHEN THE APPLIANCE IS NOT IN USE

When the appliance is not in use for long periods, disconnect from the electricity supply, empty all food and clean the appliance, leaving the doors ajar to prevent unpleasant smells.

REPLACEMENT OF INTERIOR LIGHTBULB

Should the interior light fail to work, first switch off the appliance and disconnect from the electricity supply, then replace the light bulb as follows:

Using a screwdriver remove the light cover by undoing the screw (retain the screw for later use). Then, pull the cover outward and downwards. Unscrew the bulb and replace it with a new 15 watt bulb.

The light is mounted in the rear of the cabinet, see Fig 12.

Replace the light cover by sliding it into its original position and replacing the screw.

WHAT HAPPENS IF SOMETHING GOES WRONG?

BEFORE contacting your local Tricity Bendix Service Force Centre, check the following points:

The appliance does not work . . . Check that:

* There is power at the socket.
* Ensure that there is not a power cut by checking the household lights.
* The fuse has not blown.
* The air circulation passages are not covered.

Vibration or abnormal noises . . .

* You may hear faint gurgling or bubbling sounds when the refrigerant is pumped through the coils of tubing at the rear, to the cooling plate/evaporator or to the fixed freezer shelves. When the compressor is on, the refrigerant is being pumped round, and you will hear a whirring or pulsating noise from the compressor. A thermostat controls the compressor, and you will hear a faint 'click' when the thermostat cuts in and out.

The light does not come on . . . Check that:

* The bulb is fitted correctly.
* Replace the bulb if it has blown.

Other points to check . . . Check that:

* Have you turned the thermostat to the correct setting?
* Has door been left open causing the temperature to rise?

If after the above checks, there is still a fault, call your local Service Centre.

In-guarantee customers should ensure that the above checks have been made as the engineer will make a charge if the fault is not a mechanical or electrical breakdown.

* **Please note that proof of purchase is required for any In-guarantee service calls.**

Before contacting your local Service Centre, make a note of the make, model and date of purchase of your machine: the Service Department require this information. See separate leaflet for your nearest Service Centre.

Download from Www.Somanuals.com. All Manuals Search And Download.

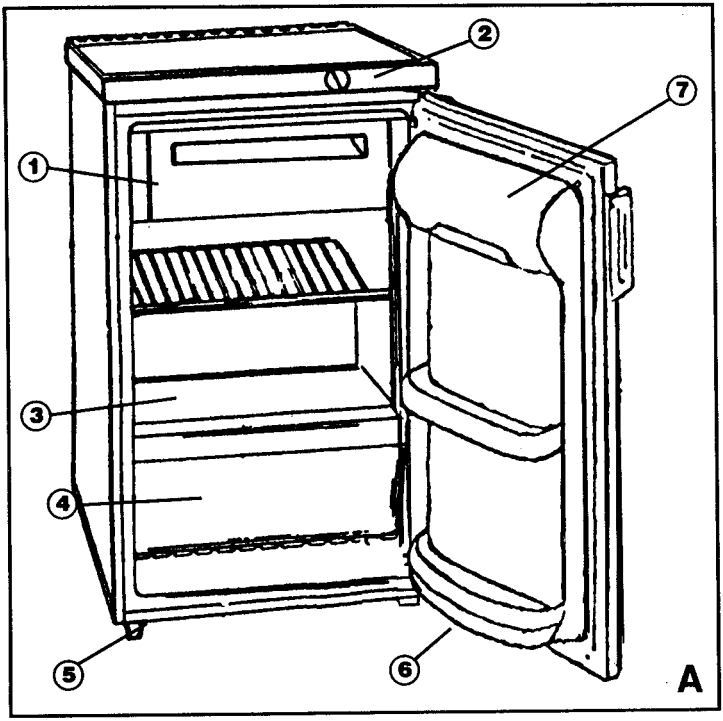

FIG 1

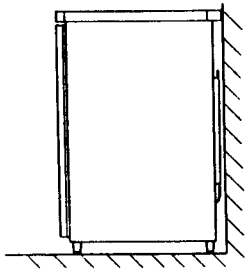

FIG 4

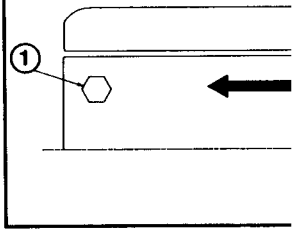

FIG 6

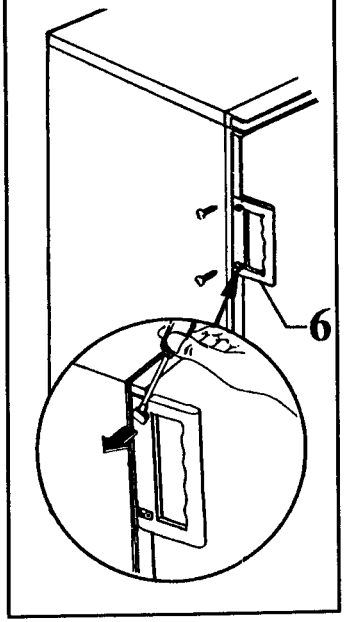

FIG 7

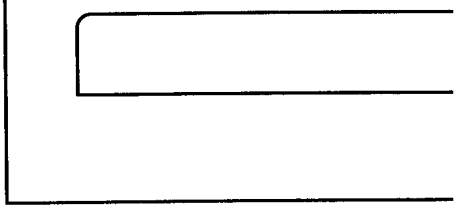

FIG 10

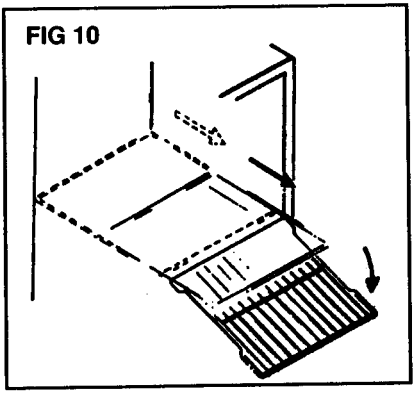

FIG

Download from Www.Somanuals.com. All Manuals Search And Download.

FIG 2

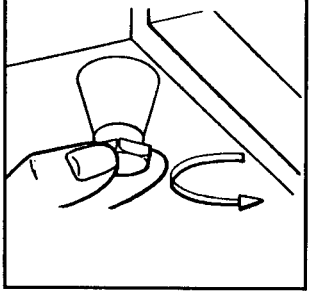

FIG 3

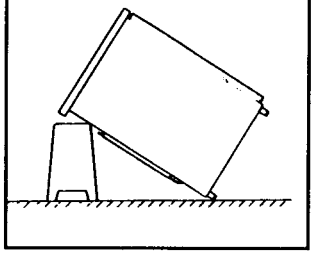

FIG 8 NON-FUSED PLUG

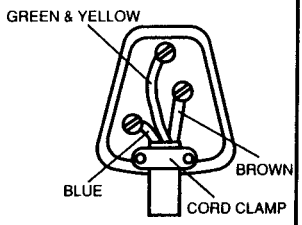

FIG 9 FUSED PLUG

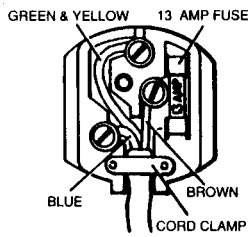

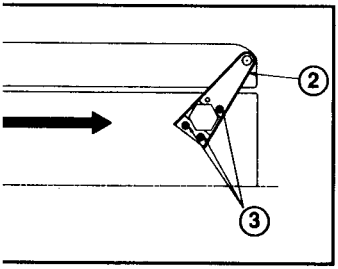

FIG 5

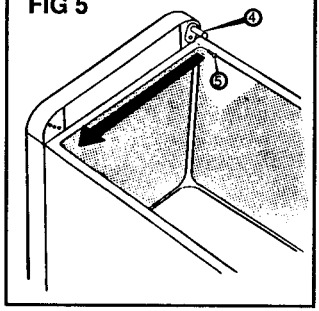

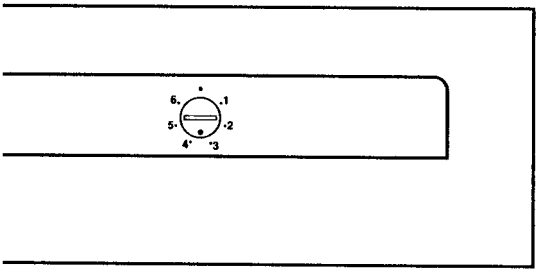

FIG 12

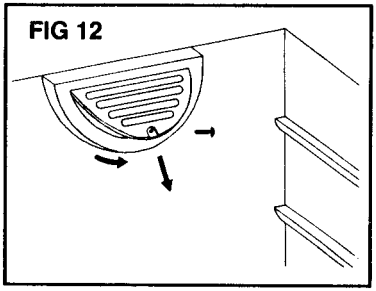

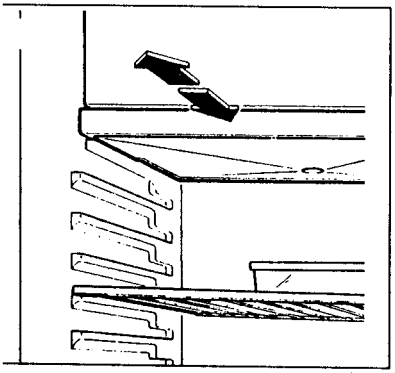

FIG 13

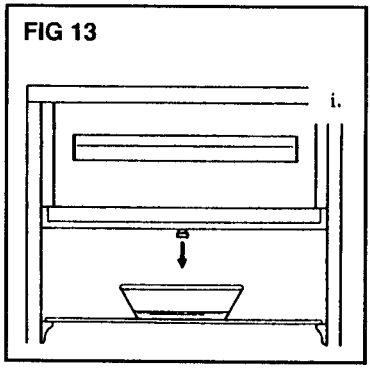

Download from Www.Somanuals.com. All Manuals Search And Download.

TRICITY BENDIX GUARANTEE CONDITIONS

Standard guarantee conditions

We, Tricity Bendix, undertake that if within 12 months of the date of the purchase this Tricity Bendix appliance or any part thereof is proved to be defective by reason only of faulty workmanship or materials, we will, at our option repair or replace the same FREE OF CHARGE for labour, materials or carriage on condition that:

- The appliance has been correctly installed and used only on the electricity supply stated on the rating plate.
- The appliance has been used for normal domestic purposes only, and in accordance with the manufacturer's instructions.
- The appliance has not been serviced, maintained, repaired, taken apart or tampered with by any person not authorised by us.
- All service work under this guarantee must be undertaken by a Tricity Bendix service centre.
- Any appliance or defective part replaced shall become the Company's property.
- This guarantee is in addition to your statutory and other legal rights.

Home visits are made between 8.30 a.m. and 5.30p.m. Monday to Friday. Visits may be available outside these hours in which case a premium will be charged.

Exclusions

This guarantee does not cover:

- Damage or calls resulting from transportation, improper use or neglect, the replacement of any light bulbs or removable parts of glass or plastic.
- Costs incurred for calls to put right machines improperly installed or calls to machines outside the United Kingdom.
- Appliances found to be in use within a commercial or similar environment, plus those which are subject to rental agreements.
- Products of Tricity Bendix manufacture which are not marketed by Tricity Bendix.

EU Countries - The standard guarantee is applicable but is subject to the owner's responsibility and cost to ensure the appliance meets the standards set by the country to which the product is taken. Proof of purchase my be required. Electrolux Aftersales Service in the country concerned, with whom Tricity Bendix have an arrangement, will be pleased to advise further.

Download from Www.Somanuals.com. All Manuals Search And Download.

Free Manuals Download Website

http://myh66.com

http://usermanuals.us

http://www.somanuals.com

http://www.4manuals.cc

http://www.manual-lib.com

http://www.404manual.com

http://www.luxmanual.com

http://aubethermostatmanual.com

Golf course search by state

http://golfingnear.com

Email search by domain

http://emailbydomain.com

Auto manuals search

http://auto.somanuals.com

TV manuals search

http://tv.somanuals.com