

REFRIGERATOR

en User manual

KI841.. / KI851..

en Table of contents

 **Safety instructions 3**

About these instructions 3
Risk of explosion 3
Risk of electric shock 3
Risk of injury 3
Danger due to refrigerants. 3
Avoiding placing children and vulnerable people at risk 4
Damage 4
Weight 4

 **Intended use 5**

 **Environmental protection 5**

Packaging 5
Old appliances 5

 **Installation and connection 6**

Contents of package 6
Technical specifications. 6
Installing the appliance 6
Cavity depth. 6
Tips for saving energy 7
Before using your appliance for the first time 8
Electrical connection 8

 **Getting to know your appliance 9**

Appliance. 9
Controls 9
Interior fittings 9

 **Operating the appliance. 10**

Switching on the appliance 10
Switching off and disconnecting the appliance. 11
Setting the temperature 11
Super cooling 11

 **Alarm 11**

Door alarm 11

 **Refrigerator compartment. 12**

Note when storing food 12
Note the chill zones in the refrigerator compartment 12

 **Cool-fresh compartment 13**

Vegetable container 13
Cool-fresh container 13
Storage times at 0 °C 13

 **Defrosting 14**

Refrigerator compartment 14

 **Cleaning 14**

Cleaning the equipment 14

 **Odours 15**

 **Lighting 16**

 **Noises 16**

Normal noises 16
Preventing noises. 16

 **Faults – what to do? 17**

 **Customer service 18**

Appliance self-test 18
Repair order and advice on faults 18
Guarantee 18

Safety instructions

This appliance complies with the relevant safety regulations for electrical appliances and is fitted with noise suppression.

The refrigeration circuit has been checked for leaks.

About these instructions

- Read and follow the operating and installation instructions. They contain important information on how to install, use and maintain the appliance.
- The manufacturer is not liable if you disregard the instructions and warnings in the operating and installation instructions.
- Retain all documents for subsequent use or for the next owner.

Risk of explosion

- Never use electric devices inside the appliance (e.g. heaters or electric ice makers).
- Do not store products which contain flammable propellants (e.g. spray cans) or explosive substances in the appliance.
- Store high-percentage alcohol tightly closed and standing up.

Risk of electric shock

Improper installations and repairs may put the user at considerable risk.

- If the mains cable is damaged: Immediately disconnect appliance from the electricity supply.
- Do not use multiple sockets, extension leads or adapters.
- Have the appliance repaired by the manufacturer, Customer Service or a similarly qualified person only.
- Use original parts supplied by the manufacturer only. The manufacturer guarantees that these parts satisfy the safety requirements.

Risk of injury

Containers which contain carbonated drinks may burst.

Danger due to refrigerants

The tubes of the refrigeration circuit convey a small quantity of an environmentally friendly but flammable refrigerant (R600a). It does not damage the ozone layer and does not increase the greenhouse effect. If refrigerant escapes, it may injure your eyes or ignite.

- Do not damage the tubes.

If the tubes are damaged:
- Keep naked flames and ignition sources away from the appliance.
- Ventilate the room.
- Switch off the appliance and pull out the mains plug.
- Call the after-sales service.

Avoiding placing children and vulnerable people at risk

At risk are:
- Children,
- People who have limited physical, mental or sensory abilities,
- People who have inadequate knowledge concerning safe operation of the appliance.

Measures:
- Ensure that children and vulnerable people have understood the hazards.
- Children or vulnerable people must be supervised by a responsible person when using the appliance.
- Only children from 8 years and above may use the appliance.
- Supervise children while the appliance is being cleaned or maintained.
- Never allow children to play with the appliance.

Risk of suffocation

- If the appliance features a lock: keep the key out of the reach of children.
- Keep children away from the packaging and its parts.

Damage

To prevent damage:
- Do not stand or support yourself on the base, runners or doors.
- Keep plastic parts and door seals free of oil and grease.
- Pull the mains plug – not the power cord.

Weight

When installing and transporting the appliance, note that it may be very heavy.
→ *"Installation location" on page 6*

Intended use

Use this appliance
- only for refrigerating food.
- only in the home and in the home environment.
- only according to these operating instructions.

This appliance is intended for use up to a maximum height of 2000 metres above sea level.

Environmental protection

Packaging

All materials are environmentally safe and recyclable:
- Dispose of packaging in an environmentally friendly manner.
- Please ask your dealer or inquire at your local authority about current means of disposal.

Old appliances

Valuable raw materials can be reclaimed by recycling old appliances.

Warning
Children may become locked in the appliance and suffocate!
- To prevent children from climbing in, leave shelves and containers in the appliance.
- Keep children away from the redundant appliance.

Caution!
Refrigerant and harmful gases may escape.
Do not damage the tubes of the refrigerant circuit and insulation.

1. Remove the mains plug.
2. Sever the power cord.
3. Have the appliance disposed of professionally.

This appliance is labelled in accordance with European Directive 2012/19/EU concerning used electrical and electronic appliances (waste electrical and electronic equipment - WEEE). The guideline determines the framework for the return and recycling of used appliances as applicable throughout the EU.

Installation and connection

Contents of package

After unpacking all parts, check for any damage in transit.

If you have any complaints, contact the dealer from whom you purchased the appliance or our after-sales service.
⟶ *"Customer service" on page 18*

The delivery consists of the following parts:
- Built-in appliance
- Interior fittings (depending on model)
- Installation material
- User manual
- Installation instructions
- Customer service booklet
- Warranty enclosure
- Information on the energy consumption and noises

Technical specifications

Refrigerant, cubic capacity and further technical specifications can be found on the rating plate.
⟶ *"Getting to know your appliance" on page 9*

Installing the appliance

Installation location

The more refrigerant an appliance contains, the larger the room must be in which the appliance is situated. Leaking refrigerant can form a flammable gas-air mixture in rooms which are too small.

The room must be at least 1 m³ per 8 g of refrigerant. The amount of refrigerant in your appliance is indicated on the rating plate inside the appliance.
⟶ *"Getting to know your appliance" on page 9*

The weight of the appliance may be up to 57 kg depending on the model.

Permitted room temperature

The permitted room temperature depends on the climatic class of the appliance.

Information on the climatic class can be found on the rating plate.
⟶ *"Getting to know your appliance" on page 9*

Climatic category	Permitted room temperature
SN	+10 °C ... 32 °C
N	+16 °C ... 32 °C
ST	+16 °C ... 38 °C
T	+16 °C ... 43 °C

The appliance is fully functional within the permitted room temperature.

If an appliance of climatic class SN is operated at colder room temperatures, the appliance will not be damaged up to a room temperature of +5 °C.

Cavity depth

A cavity depth of 56 cm is recommended for the appliance. If the cavity depth is smaller – at least 55 cm – the energy consumption increases slightly.

Tips for saving energy

If you follow the instructions below, your appliance will use less power.

Note: The arrangement of the features does not affect the energy consumption of the appliance.

Installing the appliance	
Keep the appliance out of direct sunlight.	The appliance must cool less frequently at low ambient temperatures and therefore consumes less power.
Install the appliance as far away as possible from heating elements, cooker and other heat sources: 3 cm to electric or gas cookers. 30 cm to an oil or solid-fuel cooker. **Note:** If this is not possible, attach an insulating plate between the appliance and heat source.	
Select an installation location at a room temperature of approx. 20 °C.	
Use a cavity depth of 56 cm. **Caution!** **Risk of burns!** Individual parts of the appliance become hot during operation. Touching these parts may result in burns.	The air on the rear panel of the appliance does not warm up so intensely. The appliance consumes less power if the warm air can escape.
Do not cover or block the ventilation openings.	
Ventilate the room daily.	

Using the appliance	
Open the appliance door only briefly.	The air in the appliance does not warm up so intensely. The appliance must cool less frequently and therefore consumes less power.
Transport purchased food in a cool bag and place quickly in the appliance.	
Allow warm food and drinks to cool down before placing in the appliance.	
Thaw frozen food in the refrigerator compartment in order to utilise the low temperature of the frozen food.	
Always leave a space between the food and the rear panel.	The air can circulate and the air humidity will remain constant. The appliance must cool less frequently and therefore consumes less power.
Pack food airtight.	
Vacuum the back of the appliance once a year.	The air on the rear panel of the appliance does not warm up so intensely. The appliance consumes less power if the warm air can escape.
Do not cover or block the ventilation openings.	

Before using your appliance for the first time

1. Remove information material, adhesive tape and protective film.
2. Clean the appliance.
   ⟶ *"Cleaning" on page 14*

Electrical connection

Caution!
Do not connect the appliance to electronic energy saver plugs.

Note: You can connect the appliance to mains-controlled and sine-controlled inverters.
Mains-controlled inverters are used for photovoltaic systems which are connected directly to the national grid. Sine-controlled inverters must be used for isolated applications. Isolated applications, e.g. on ships or in mountain lodges, which are not connected directly to the national grid.

1. After installing the appliance, wait at least 1 hour before connecting it to prevent damaging the compressor.
2. Connect the appliance via a correctly installed socket.
   The socket must comply with the following data:

Socket with	220 V ... 240 V
Conductor	50 Hz
Fuse	10 A ... 16 A

   Outside Europe: Check whether the indicated current type of the appliance corresponds with the values of your power supply. Appliance specifications are on the rating plate.
   ⟶ *"Getting to know your appliance" on page 9*
3. Connect the appliance to a socket near the appliance.
   The socket must also be freely accessible following installation of the appliance.

   ⚠ Warning
   Risk of electric shock!
   If the length of the mains cable is inadequate, never use multiple sockets or extension leads.Instead, please contact Customer Service for alternatives.

Getting to know your appliance

Fold out the last page with the diagrams. The appliance and diagrams may differ according to features.

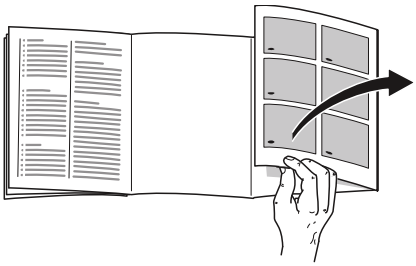

Appliance

⟶ Fig. **1**

* Not all models.

A Refrigerator compartment
B Cool-fresh compartment

1 ... 5 Controls
6 Lighting
7 * Extendable shelf
8 Partition with humidity controller
9 Vegetable container
10 Cool-fresh container
11 Rating plate
12 * Butter and cheese compartment
13 Tray for large bottles

Controls

⟶ Fig. **2**

1 Button ⏻
Switches the appliance on or off.

2 Button **Super** refrigerator compartment
Switches Super cooling on or off.

3 Button ◁ / ▷ refrigerator compartment
Sets the temperature of the refrigerator compartment.

4 Refrigerator compartment temperature display
Indicates the set temperature in °C.

5 Button **Alarm**
Switches the warning signal off.

Interior fittings

(not all models)

Shelf

⟶ Fig. **3**

You can vary the shelf:
- Pull out and remove the shelf.

Vario shelf

⟶ Fig. **4**

You can store tall items (e.g. cans or bottles):
- Take out the front part of the shelf and push under the rear part.

Extendable shelf

⟶ Fig. **5**

You can give yourself a better overview:
- Pull out a shelf.

You can completely remove the shelf:
1. Press and hold down both buttons under the shelf.
2. Pull out the shelf, lower and swing out to the side.

Container

⟶ Fig. 6

You can remove the container:
- Lift the container at rear and remove.

You can insert the container:
- Place the container on the telescopic rails and push into the appliance.

Butter and cheese compartment

⟶Fig. 7

The compartment is easy to open:
- Lightly press the flap below in the middle.
  The compartment opens downwards. The flap is pushed under the compartment.

Storage compartment

⟶ Fig. 8

You can remove the storage compartment:
- Lift up storage compartment and remove.

Bottle holder

⟶ Fig. 9

When you open and close the door:
- The bottle holder prevents the bottles from overturning.

Operating the appliance

Switching on the appliance

1. Press the ⏻ button.
   The appliance begins to cool.
2. Set the required temperature.
   ⟶ *"Setting the temperature" on page 11*

Operating tips

- After the appliance has been switched on, it may take several hours until the set temperature has been reached. Do not put in any food until the selected temperature has been reached.
- The sides of the housing are partly heated slightly. This prevents condensation in the area of the door seal.

Switching off and disconnecting the appliance

Switching off the appliance

- Press the ⏻ button.
  The appliance no longer cools.

Disconnecting the appliance

If you do not use the appliance for a prolonged period:

1. Press the ⏻ button.
   The appliance no longer cools.
2. Pull out the mains plug or switch off the fuse.
3. Clean the appliance.
4. Leave the appliance open.

Setting the temperature

Recommended temperature

Refrigerator compartment: +4 °C

Refrigerator compartment

- Keep pressing the button ◁ / ▷ until the display indicates the required temperature.

Cool-fresh compartment

The temperature in the cool-fresh compartment is kept at around 0 °C.

Note: If frost forms on the food items in the cool-fresh compartment, set a higher temperature. ⟶ *"Faults – what to do?" on page 17*

Super cooling

Super cooling cools the refrigerator compartment as cold as possible.

Switch on super cooling mode, e.g.:

- before placing large quantities of food in the compartment
- for cooling drinks quickly

Note: When super cooling is switched on, increased operating noises may occur.

After 15 hours the appliance switches to normal operation.

Switching Super cooling on/off:

- Press the **Super** button.
  The button is lit when Super cooling is switched on.

Alarm

Door alarm

The door alarm (continuous sound) switches on if the appliance door is open for longer than two minutes.

- Close the door or press the **Alarm** button.
  The warning signal is switched off.

Refrigerator compartment

The refrigerator compartment is suitable for storing dairy products, eggs, cooked meals, pastries, preserves once opened and hard cheese.

The temperature can be set from +3 °C ... +8 °C.

The refrigerator compartment can also be used to store highly perishable foods in the short to medium term. The lower the selected temperature, the slower the enzymatic and chemical processes and deterioration by microorganisms.
A temperature of +4 °C or lower ensures optimum freshness and safety of the stored foods.

Note when storing food

- Store fresh, undamaged food. The quality and freshness will then be retained for longer.
- In the case of ready products and bottled goods do not exceed the minimum sell-by date or use-by-date indicated by the manufacturer.
- To retain aroma, colour and freshness, pack or cover food well before placing it in the appliance.
  This avoids transference of flavours and discolouration of the plastic parts.
- Leave warm food and drinks to cool down before placing them in the refrigerator compartment.

Note the chill zones in the refrigerator compartment

The air circulation in the refrigerator compartment creates different chill zones.

Coldest zone

The coldest zone is on the partition and in the storage area for large bottles.

Warmest zone

The warmest zone is at the very top of the door.

Notes

- Store e.g. hard cheese and butter in the warmest zone. Cheese can then continue to release its aroma and the butter will still be easy to spread.
- Store perishable food such as fish, sausages and meat in the cool-fresh compartment. ⟶ *"Cool-fresh compartment" on page 13*

Cool-fresh compartment

The temperature in the cool-fresh compartment is kept at around 0 °C.

The low temperature and the optimum moisture provide ideal storage conditions for fresh food.

With cool-fresh storage, you can keep fresh foodstuffs fresh for up to three times longer than in the refrigerator compartment – for even longer freshness, nutrient retention and better flavour.

Vegetable container

⟶ Fig. **10**

The vegetable container is the best storage location for fresh fruit and vegetables.You can adjust the humidity in the vegetable container via the humidity controller of the division plate and a special seal.

The humidity in the vegetable container can be set according to the type and amount of products to be stored:

- Mainly fruit as well as for a large load – set lower air humidity
- Mainly vegetables as well as for a mixed or small load – set higher air humidity

Notes

- Fruit sensitive to cold (e.g. pineapple, banana, papaya and citrus fruit) and vegetables sensitive to cold (e.g. aubergines, cucumbers, courgettes, peppers, tomatoes and potatoes) should be stored outside the appliance at temperatures of approx. +8 °C ... +12 °C for optimum preservation of quality and flavour.
- Condensation may form in the vegetable container depending on the food and quantity stored. Remove condensation with a dry cloth and adjust the humidity in the vegetable container with the humidity controller.

Cool-fresh container

⟶ Fig. **1**/10

The storage climate in the cool-fresh container offers ideal conditions for the storage of fish, meat and sausage.

Storage times at 0 °C

The storage times are dependent on the original quality.

Fresh fish, seafood:	up to 3 days
Poultry, meat (boiled/fried):	up to 5 days
Beef, pork, lamb, sausage products (cold meat):	up to 7 days
Smoked fish, broccoli:	up to 14 days
Salad greens, fennel, apricots, plums:	up to 21 days
Soft cheese, yoghurt, quark, buttermilk, cauliflower:	up to 30 days

Defrosting

Refrigerator compartment

The defrost process is performed automatically.

Cleaning

Caution!
Avoid damaging the appliance and the fittings.

- Do not use abrasive, chloride or acidic cleaning agents or solvents.
- Do not use scouring or abrasive sponges.
  The metallic surfaces may corrode.
- Never clean the shelves or containers in the dishwasher.
  The parts may become deformed.

Proceed as follows:

1. Switch off the appliance.
2. Pull out the mains plug or switch off the fuse.
3. Take out the food and store in a cool location.
   If present: place ice pack on the food.
4. If present: wait until the layer of frost has thawed.
5. Clean the appliance with a soft cloth, lukewarm water and a little pH-neutral washing-up liquid.
   Caution!
   The rinsing water must not run into the light or through the drainage hole into the evaporation area.
6. Wipe door seal with clear water and dry thoroughly with a cloth.
7. Reconnect and switch on appliance and put in food.

Cleaning the equipment

To clean, take the variable parts out of the appliance.
⟶ *"Interior fittings" on page 9*

Partition and vegetable container cover

Taking out the partition

⟶ Fig. 11

- Press levers on the underside on both sides, pull partition forwards, lift and swivel out to the side.

Taking out the vegetable container cover

- Lift cover, pull forwards and swivel out to the side.

Inserting vegetable container cover and partition

⟶ Fig. 12

1. Insert vegetable container cover.
2. Insert partition.
   Note: In order to be able to insert the partition, you must set the humidity controller to the lowest air humidity setting.

Telescopic rails

⟶ Fig. 13

Removing telescopic rails

1. Pull out telescopic rail.
2. Push lock in the direction of the arrow.
3. Detach telescopic rail from the rear pin.
4. Push telescopic rail together, push backwards above the rear pin and disengage.

Installing telescopic rails

1. Place the extended telescopic rail on the front pin.
2. Pull the telescopic rail forwards slightly until it engages.
3. Insert telescopic rail on the rear pin.
4. Push lock backwards.

Odours

If you experience unpleasant odours:

1. Switch off the appliance with the On/Off button ①.
2. Take all food out of the appliance.
3. Clean the inside.⟶ *"Cleaning" on page 14*
4. Clean all packages.
5. Seal strong smelling food in order to avoid odours from forming.
6. Switch the appliance on again.
7. Store food in the appliance.
8. Check whether the formation of odours is still occurring after 24 hours.

Lighting

Your appliance features a maintenance-free LED light.

Only customer service or authorised technicians may repair the light.

Noises

Normal noises

Droning: A motor is running, e.g. refrigerating unit, fan.

Bubbling, buzzing or gurgling: Refrigerant is flowing through the tubes.

Clicking: Motor, switches or solenoid valves are switching on and off.

Cracking: Automatic thawing successful.

Preventing noises

Appliance is not level: Align appliance using a spirit level. If required, place a little packing underneath.

Containers, shelves or storage compartments wobble or stick: Check the removable fittings and re-insert if required.

Bottles or receptacles are touching each other: Move bottles or receptacles away from each other.

Faults – what to do?

Before you call customer service, use this table to check whether you can rectify the fault yourself.

Temperature differs greatly from the set value.	
	Switch off appliance for 5 minutes. ⟶ *"Switching off and disconnecting the appliance" on page 11* If the temperature is too warm, check temperature again after a couple of hours. If the temperature is too cold, check temperature again on the following day.

Displays do not illuminate.	
The mains plug has not been inserted properly.	Connect the mains plug.
The fuse has tripped.	Check the fuses.
The power has failed.	Check whether the power is on.

Display indicates "E...".	
Electronics have detected a fault.	Call the after-sales service. ⟶ *"Customer service" on page 18*

Appliance is not cooling, display and lighting are lit.	
Showroom mode switched on.	Start the appliance self-test. ⟶ *"Appliance self-test" on page 18* When the programme has ended, the appliance switches over to normal operation.

It is too warm or too cold in the cool-fresh compartment.	
The standard setting has been set too high or low (e.g. frost in the cool-fresh compartment).	You can set the temperature in the cool-fresh compartment to be 3 settings warmer or colder. If the temperature in the refrigerator compartment is set to setting 0, the cool-fresh compartment has a temperature of around 0 °C. **1.** Press and hold the refrigerator compartment **Super** button until the display temperature refrigerator compartment flashes. **2.** Press ◁ / ▷ button to change the setting. Setting –3 corresponds to the coldest setting. Setting +3 corresponds to the warmest setting. The selected setting is saved after one minute.

Customer service

If you are unable to rectify the fault, please contact our customer service. We will always find an appropriate solution in order to avoid unnecessary visits by engineers.

The contact information for your nearest customer service can be found here or on the enclosed customer service list.

When calling, please state the product number (E-Nr.) and the production number (FD) which can be found on the rating plate.
→ *"Getting to know your appliance" on page 9*

Trust the expertise of the manufacturer. You can therefore be sure that the repair is carried out by trained service technicians who carry original spare parts for your domestic appliances.

Appliance self-test

Your appliance features a self-test programme which displays the fault which your customer service can rectify.

1. Switch off the appliance and wait 5 minutes.
2. Switch on the appliance.
3. Within the first 10 seconds after switching on, press and hold the **Super** refrigerator compartment button for 3- 5 seconds until an audible signal sounds.
   The self-test programme starts.
   While the self-test is running, a long audible signal sounds in the meantime.

- If 2 audible signals sound after the end of the self-test and the set temperature is displayed, your appliance is OK.
- If, at the end of the self-test, 5 audible signals sound and the **Super** freezer compartment button flashes for 10 seconds, inform customer service.

When the programme has ended, the appliance switches over to normal operation.

Repair order and advice on faults

Contact information for all countries can be found on the enclosed customer service list.

GB	0344 892 8989	Calls charged at local or mobile rate.
IE	01450 2655	0.03 € per minute at peak. Off peak 0.0088 € per minute.

Guarantee

Detailed information on the warranty period and warranty conditions in your country are available from your customer service, your dealer and on our website.

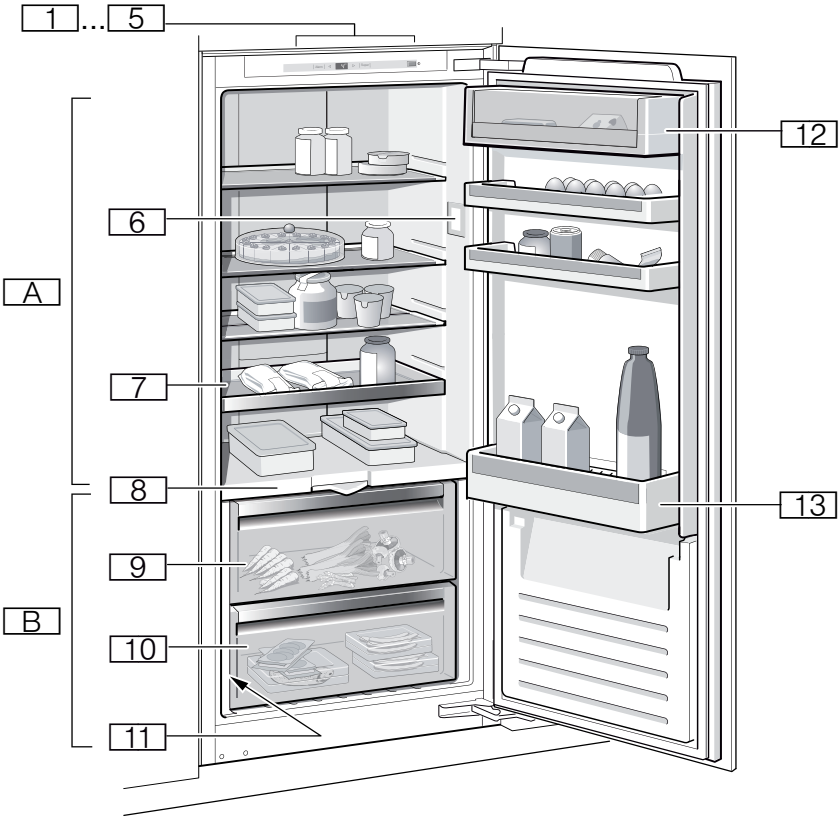

1

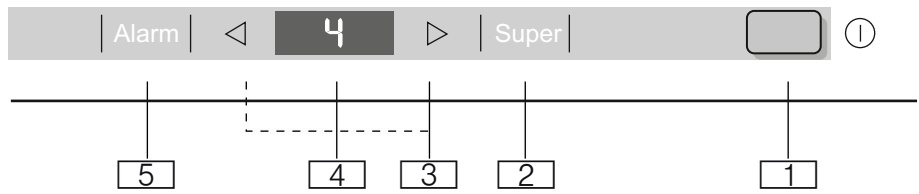

2

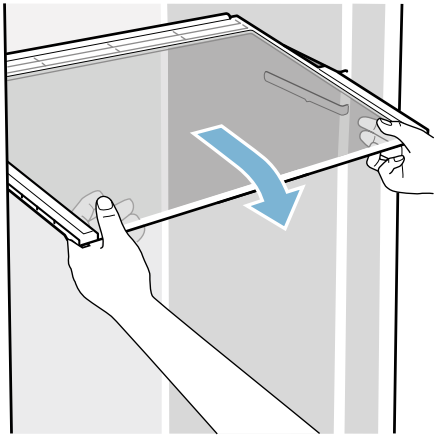

3

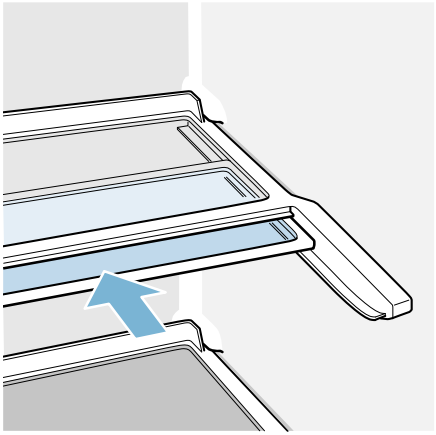

4

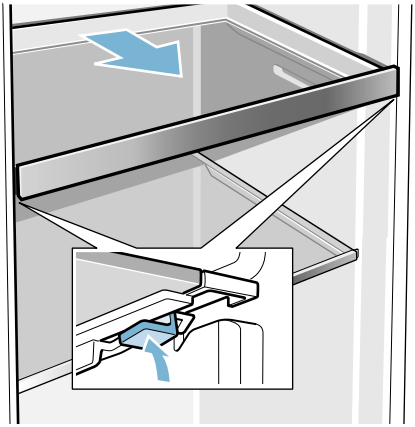

5

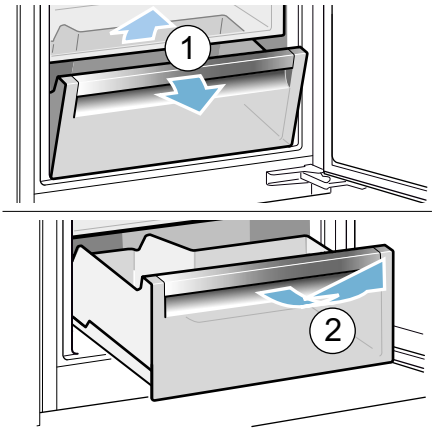

6

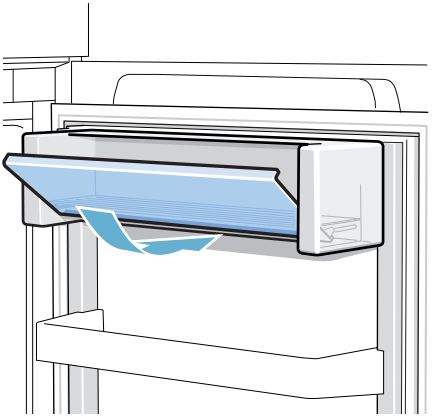

7

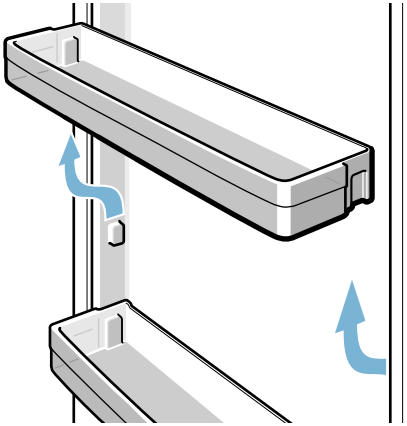

8

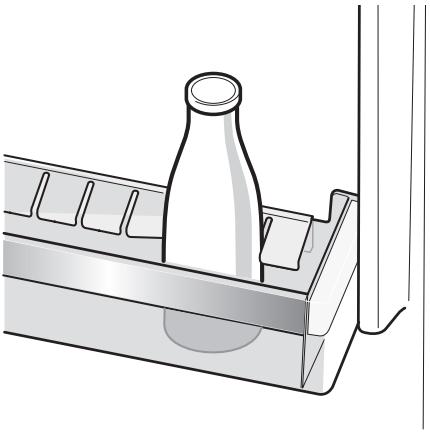

9

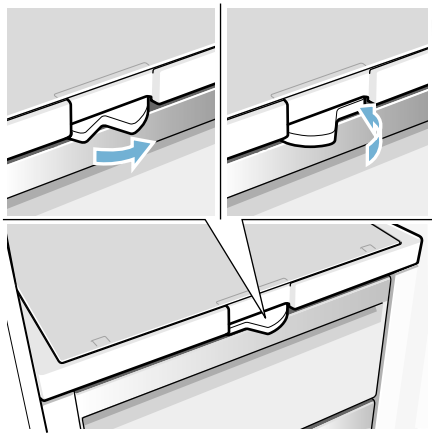

10

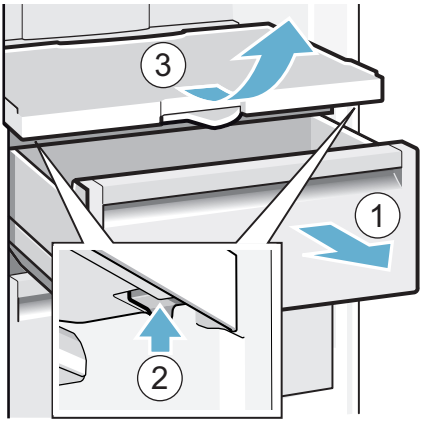

11

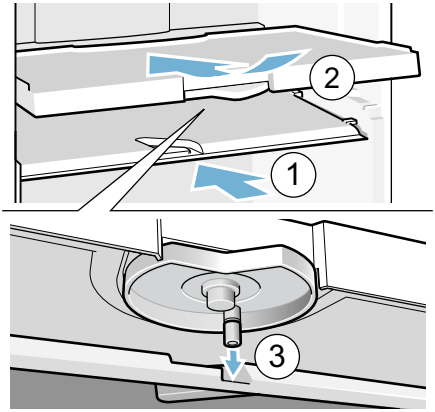

12

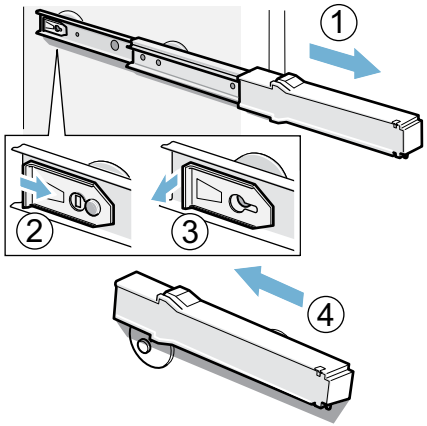

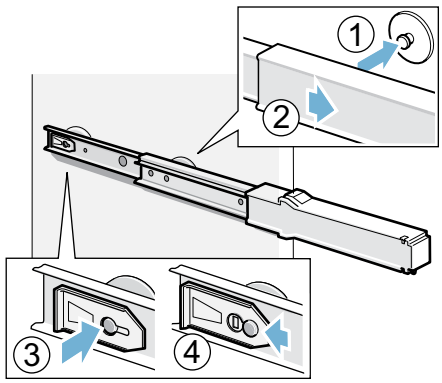

13



REGISTER YOUR PRODUCT
ONLINE NEFF-HOME.COM

Constructa NEFF Vertriebs-GmbH |
Carl-Wery-Straße 34 | 81739 Munich
Germany

8001020588
(9901)
en