Use & Care MANUAL



Integrated Refrigerator / Freezer

7 SERIES

VBI7360 / CVBI7360
FBI7360 / CFBI7360
MVBI7360 / CMVBI7360
MFBI7360 / CMFBI7360

Congratulations

We hope you will enjoy and appreciate the care and attention we have put into every detail of your new, state-of-the-art refrigerator.

Your appliance is designed to offer years of reliable service. This Use and Care Guide will provide you with the information you need to become familiar with your refrigerator's care and operation. For additional information and user videos, visit our website at vikingrange.com

Your complete satisfaction is our ultimate goal. If you have any questions or comments about this product, contact our Consumer Support Center at 1-888-845-4641.

We appreciate your choice of our refrigerator and hope that you will again select our products for your other major appliance needs.

For more information about the complete and growing selection of our products, visit us online at vikingrange.com

Table of Contents

Getting Started

Warnings ____ 3
Important Information ____ 4
Proper Disposal (of old refrigerator) ____ 4
Features ____ 5

Product Controls

Settings and Functions ____ 6

Operation

Refrigerator ____ 8
Freezer ____ 10
Automatic Ice Maker ____ 10
Food Storage Guide ____ 11

Product Care

Cleaning and Maintenance ____ 12
Troubleshooting ____ 15
Service Information ____ 16
Warranty ____ 17

Warnings

Your safety is important to us. This use and care manual contains safety symbols and statements. Please pay special attention to these symbols and follow any instructions given. This symbol alerts you to hazards such as fire, electrical shock or other injuries.

⚠ WARNING

To reduce the risk of fire, electric shock, or injury when using your unit, follow these basic precautions:

- Read all instructions before using the unit.
- **NEVER** allow children to operate, play with, or crawl inside the unit.
- **NEVER** clean unit parts with flammable fluids. The fumes can create a fire hazard or explosion.
- **ALWAYS** turn the power on/off switch (located to the left of the center behind the access panel) to the OFF position before attempting to clean or service the unit.

FOR YOUR SAFETY

DO NOT STORE OR USE GASOLINE OR OTHER FLAMMABLE VAPORS AND LIQUIDS IN THE VICINITY OF THIS OR ANY OTHER APPLIANCE. THE FUMES CAN CREATE A FIRE HAZARD OR EXPLOSION.

⚠ WARNING



ELECTRICAL SHOCK HAZARD

- Plug into a grounded 3-prong outlet.
- If a 2-prong wall receptacle is encountered, contact a qualified electrician.
- **DO NOT** remove ground prong.
- Unit must be grounded at all times.
- **DO NOT** use an adapter.
- **DO NOT** use an extension cord.
- Failure to follow these instructions can result in death, fire, or electrical shock.-

⚠ CAUTION

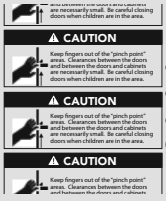

Keep fingers out of the "pinch point" areas. Clearances between the doors and between the doors and cabinets are necessarily small. Be careful closing doors when children are in the area.

⚠ WARNING

To avoid serious illness or death, do not use unit where water is unsafe or of unknown quality without adequate disinfection before or after use of filter.

⚠ WARNING

To avoid electrical shock which can cause severe personal injury or death, turn power disconnect switch to OFF before cleaning. After cleaning, return power disconnect switch to ON position.

⚠ WARNING



ELECTRICAL SHOCK HAZARD

Disconnect power or turn power disconnect switch to OFF position before removing top grille. Failure to do so can result in death or electrical shock.

⚠ WARNING



BURN HAZARD

DO NOT touch condenser coils near defrost pan. Doing so can result in burns.

Important Safety Instructions

- Install and level your refrigerator on a floor that will hold its weight,plus food weight (approximately 1200 pounds [540kg]) and in an area suitable for its size and use.
- **DO NOT** install a refrigeration unit near a heat source, nor in a location where the surrounding temperature will fall below 60°F (16° C).
- **DO NOT** allow your refrigerator to be exposed to the weather or outdoor elements.
- Connect your refrigerator only to the appropriate kind of electrical outlet, with the correct power supply and grounding. (***Refer to the Electrical Requirements section of the Installation Instructions.***)
- Use the refrigerator only for the uses described in this manual.
- Properly maintain the refrigerator.
- Be sure the refrigerator is not used by anyone unable to operate it properly.

Proper Disposal (of old refrigerator)

IMPORTANT:
Now that you have a new refrigerator, it is extremely important that you dispose of your old appliance in a way that minimizes the possibility that children will find it. There have been many cases in years past of children crawling inside junked and abandoned refrigerators and becoming trapped or suffocated.

Contact your municipal waste disposal authority to find out the best and safest way to dispose of your old refrigerator.

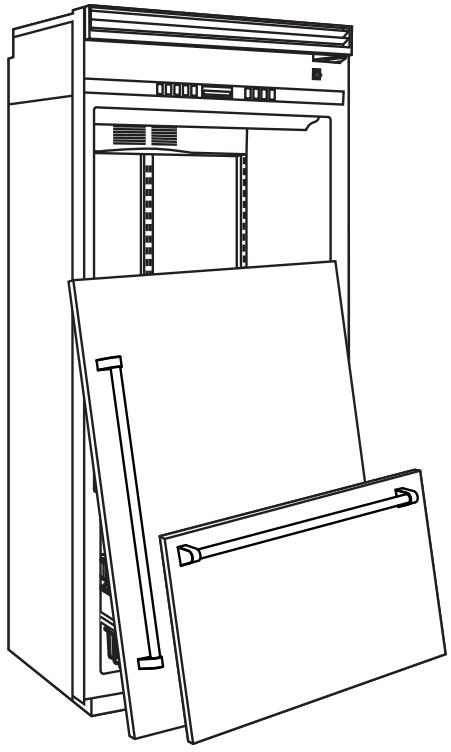

⚠ WARNING

RISK OF CHILD ENTRAPMENT
Before You Throw Away Your Old Refrigerator or Freezer:
- Take off the doors.
- Leave the shelves in place so that children may not easily climb inside.

Features

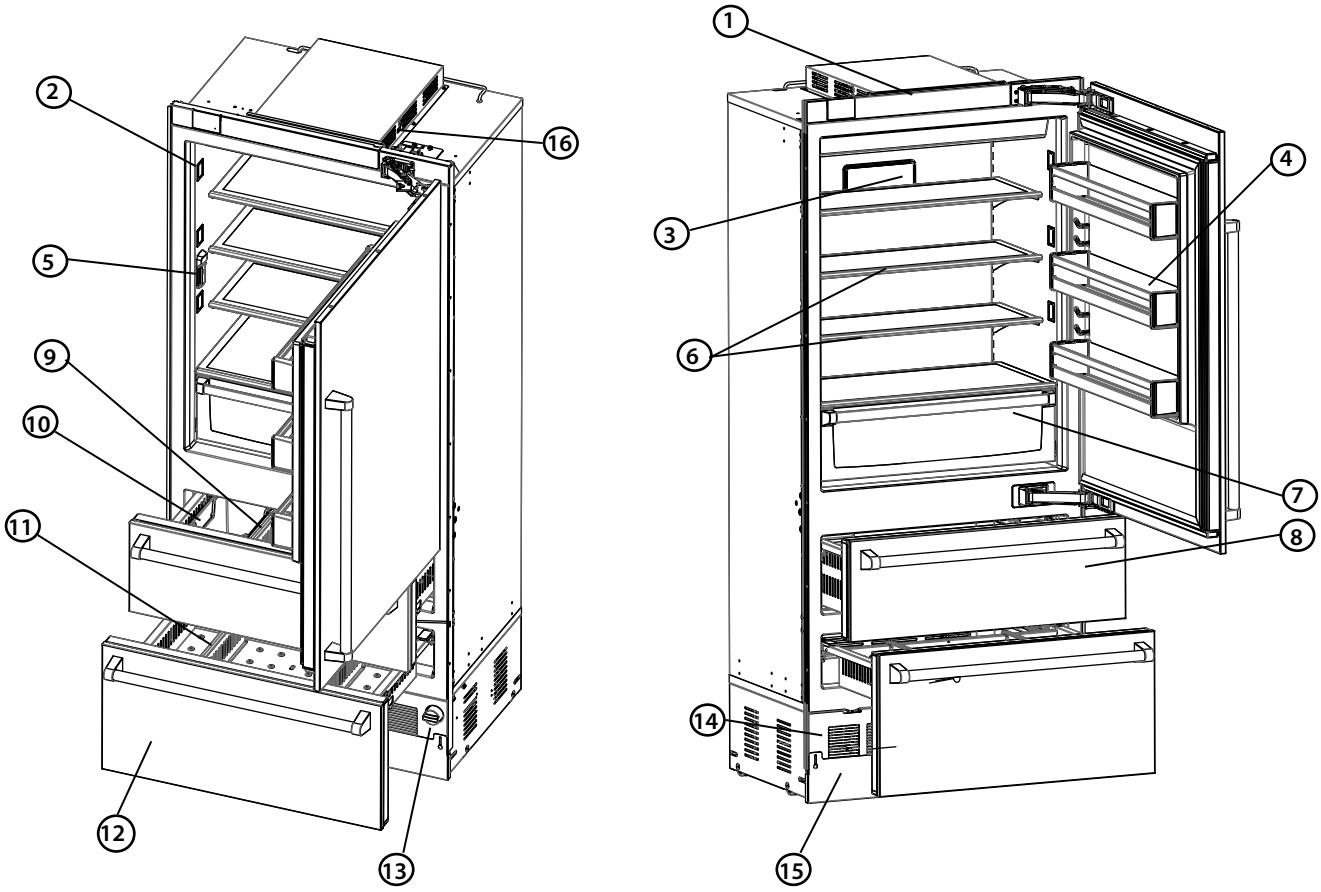

1	Control Panel
2	Theater ramp-on LED Lighting
3	Bluezone® Fresh Preservation Technology* (Rear Inside Wall)
4	Door Bins (3)
5	Internal Water dispenser
6	Spillproof Shelves with Nano Technology (3)
7	Crisper Drawer
8	Removable Upper Freezer Drawer
9	Upper Freezer Drawer Dividers (Non-Adjustable)
10	Ice Bin
11	Removable Lower Freezer Drawer
12	Lower Freezer Drawer Dividers (Adjustable)
13	Water Filter
14	Access panel
15	Kickplate
16	Door Stop

*Bluezone is a registered trademark of Primaira, LLC

Settings and Functions

In order for your new refrigerator to work properly, it is important that you understand its various features, controls, and how to use them.

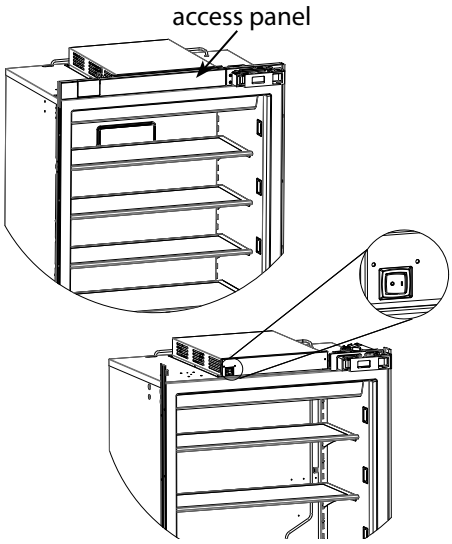

Power On/Off Switch

Your unit is shipped with the power switch on. When first plugged in, the display will flash. Push any button to initiate display.

The power on/off switch is located to the left of the center behind the access panel. It is used to turn the power off when cleaning or servicing the refrigerator.

To turn power off, remove the access panel. Press the power on/off switch to the off position.

To turn power on, press power on/off switch to the on position. Replace access panel.

IMPORTANT: Be sure the power on/off switch is in the on position after cleaning or servicing.

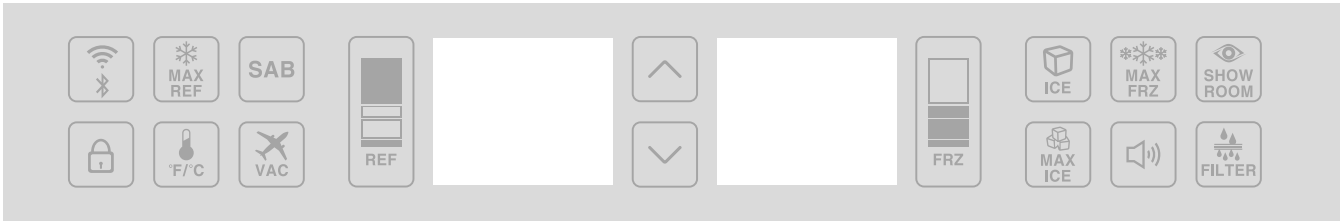



(Select Models only) Viking Range, LLC Connect App enables connectivity from a mobile phone to monitor temperatures, settings, and allows for various alerts to be sent to the phone. If the NIC Enabled is set to on, the icon will illuminate blue. If not enabled, the icon will remain white.



Enabling the lock feature will prevent the use of any other keypad operation. When the lock is enabled, the lock keypad will illuminate blue. The enabled status of the lock is not retained after power loss. To disable the lock feature press the lock keypad again. When the lock is disabled, the icon will illuminate white.



Max refrigerator mode adjusts the refrigerator temperature to the coldest setting for four hours, at the end of which the refrigerator's temperature automatically returns to its previous setting. To activate the max refrigerator mode, simply press the "MAX REF" button. The "MAX REF" light will glow to let you know you've turned on the max refrigerator mode. To deactivate the max refrigerator mode before the end of the four hour cycle, press the "MAX REF" button and the blue illumination will go out.



Temperature Change Button. When you first plug your new refrigerator in, you will find that the refrigerator is factory set at 38° F in the refrigerator and 0° F in the freezer. Wait 24 hours after plug-in for the cabinets to reach this setting. After 24 hours, you may adjust controls as desired. To change from °F to °C, press the "°F/ °C" button, To change back, press the °F/ °C button again.



Sabbath mode is used to disable interior lights and alarms for observance of the Sabbath. To enter Sabbath mode, press the "SAB" button. Button will illuminate blue to indicate "SAB" mode is active. When your refrigerator is in Sabbath mode, interior lights, display (excluding SAB indicator, temperature, and compartment indicator), and alarms are disabled. The "SAB" button will illuminate blue. If your refrigerator loses power while in Sabbath mode, it will return to the Sabbath mode when power is reestablished. To exit the Sabbath mode, press the "SAB" button.



Vacation mode will optimize refrigerator energy consumption during periods of non-use. Press the "VAC" button to activate. Press again to return refrigerator to normal operation.

Settings and Functions



The ice button will turn on or turn off ice production. The default setting is on. The button will illuminate in blue. Press to turn off ice production.



The "MAX ICE" button sets ice maker to full capacity. Press "MAX ICE" button to activate. The max ice mode sets the freezer to its lowest setting (-5º) for 48 hours and will end after function is completed.



Max freezer mode adjusts the freezer temperature to the coldest setting for 6 hours, at the end of which, the freezer temperature automatically returns to its previous setting. To activate the max freezer mode, press the "MAX FRZ" button. The "MAX FRZ" button will glow to let you know you have turned on the max freezer mode. To deactivate the max freezer mode before the end of the 6 hours cycle, simply press the "MAX FRZ" button.



The alarm sounds and the ALARM button light blinks if either door or drawer is left open for more than three minutes. To deactivate the door open alarm, press the "ALARM" button or close the door that is open. When the alarm sounds, a number will be illuminated in either the REF or FRZ digital display. Refer to Troubleshooting Section for explanation of codes.



To activate / deactivate Showroom mode, simultaneously press and hold the VAC key and the ALARM key for 3 seconds. The showroom mode icon will illuminate blue. The icon will not be visible when deactivated. When in the Showroom Mode, all controls including regulation of temperature will be disabled except for the interior lights. No error or fault codes will be displayed while in this mode.



The "FILTER" button will illuminate when it is time to change the water filter. After replacing the filter, press button to reset. Filter icon will be visible only when it is time to change the filter. To replace water filter, refer to page 9. For additional information, visit vikingrange.com



The Bluezone technology is designed to help remove odors, reduce flavor transfer, remove airborne mold, and maintain the color, texture and taste of fruits and vegetables for longer periods of time. When it comes time to replace the Bluezone bulb, Bluezone will appear along the bottom of the refrigerator display. To replace the bulb, refer to page 14 . For additional information, visit vikingrange.com

LED Lighting

Both the refrigerator and freezer compartments feature maintenance-free LED lighting. To replace, contact an authorized service technician.

Setting the Temperature

When you first plug your new refrigerator in, you will find that the refrigerator is factory set at 38ºF in the refrigerator and 0ºF in the freezer. Wait 24 hours after plug-in for the cabinets to reach this setting. After 24 hours, you may adjust controls as desired.

To adjust the refrigerator or freezer temperature, press either the REF or FRZ button. Using either the UP or DOWN toggle, set desired temperature.

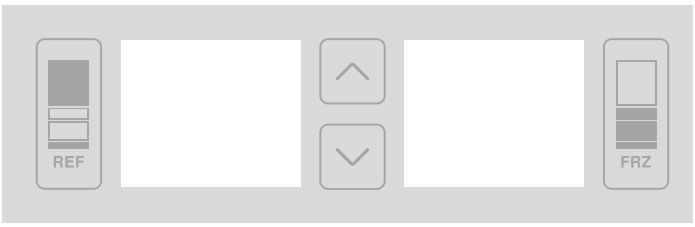

Spillproof Plus Shelves with Nano Technology

The spillproof shelves with Nano Technology contain liquids with no raised edges in order to provide extra shelf capacity.

Note: Foods and beverages placed on the uppermost shelf under the air vent may freeze.

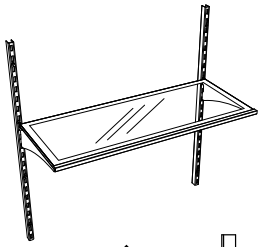

Shelf Adjustment

You can adjust the shelves to match the way you use your refrigerator. To remove the shelves, push up on the shelf, tilt upward at the front releasing the hooks from the shelf support, then pull the shelf straight out.

To replace shelves, guide the rear hooks of the shelf into the slots in the shelf supports. Then, tilt the shelf up at the front until the hooks drop into the slots, and lower the front of shelf to level position.

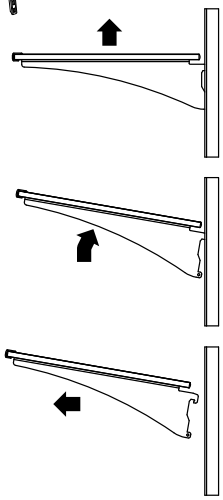

Non-Adjustable Shelf

One non-adjustable glass shelf is located above the crisper drawer.

⚠ CAUTION

To avoid personal injury and property damage, confirm shelf is secure before placing items on shelf.

⚠ CAUTION

To avoid personal injury or property damage, handle tempered glass shelves carefully. Shelves may break suddenly if nicked, scratched, or exposed to sudden temperature change.

Door Bin Adjustment

Your refrigerator's door bins hold two-liter bottles and can be placed in any position on the refrigerator door.

To remove a bin, grasp both sides, push the bin up from the sides, and pull it out. **DO NOT** pull the bin up by the top trim.

To replace the bin, place it over the glides in the refrigerator door, and push the door bin down to lock it into place.

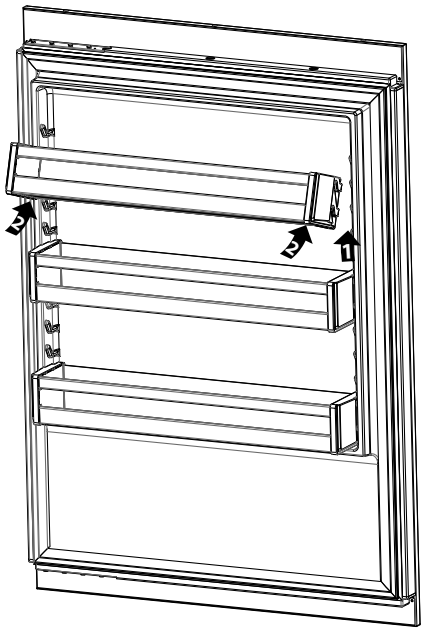

DO NOT pull the bin up by the top trim

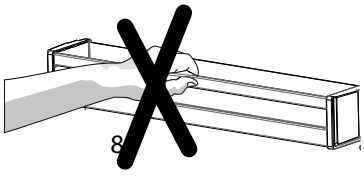

Internal Water Dispenser

The water dispenser is located inside the refrigerator on the left wall. After refrigerator is installed, wait several hours for the water to chill before dispensing. To dispense, press a glass against the dispenser pad. Water will stop dispensing when glass is removed.

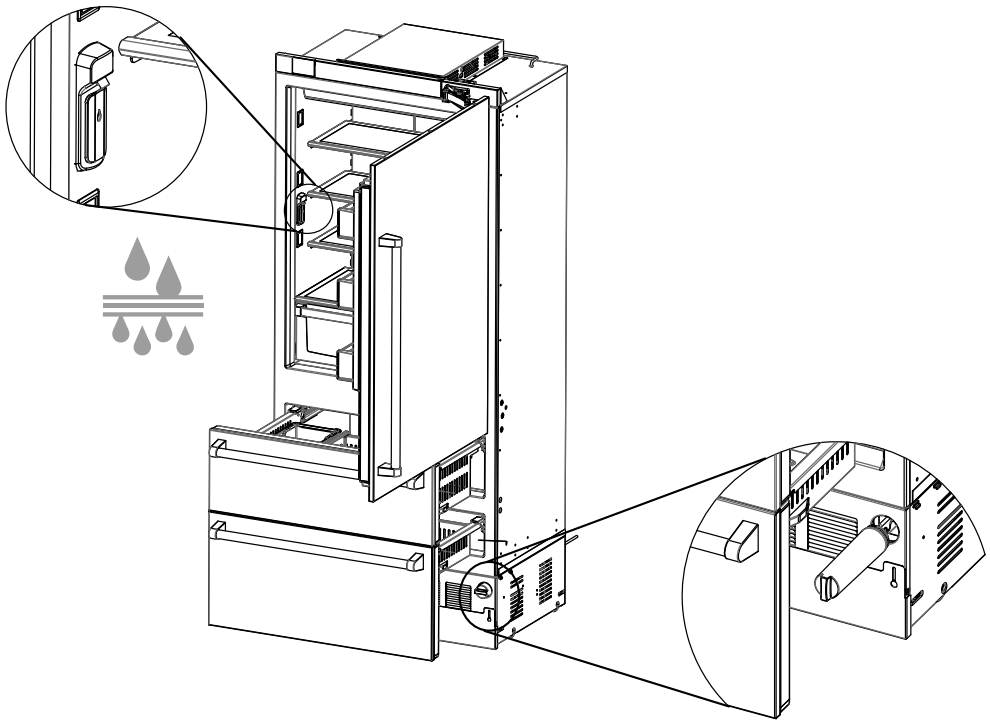

Water Filter

The water filter is located on the bottom right corner behind the lower freezer drawer.

To remove the water filter, push in and turn 1/4 counter clockwise, pull out.
To replace the water filter, push in, turn 1/4 clockwise, release

For additional replacement information or to order replacement filter RWFDISP online, visit the product information tab for 7 Series Bottom Mount Refrigerators online at www.vikingrange.com or by calling 1-888-845-4641.

Freezer Dividers

The freezer dividers separate the freezer into sections for easy food organization. Each drawer has two dividers which are removable but not interchangeable. Upper basket dividers are not adjustable. Lower basket dividers are adjustable.

To remove dividers, push rear divider toward back of drawer until front tab releases from front drawer panel. Rotate slightly and pull up. To replace, place rear tab in back of drawer, push and lower front of divider into slot on front panel

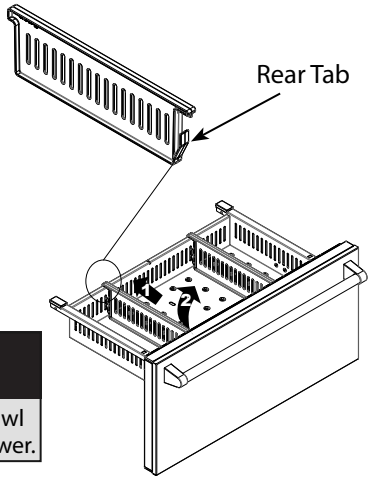

⚠ WARNING

If the lower freezer basket dividers are removed, there is enough space for children to crawl inside. To prevent accidental child entrapment, **DO NOT** allow children to play inside drawer.

Freezer Drawers

Both freezer drawers are removable.

Pull drawer all the way out.
Remove clip on both sides of drawer.
Lift drawer up and out.

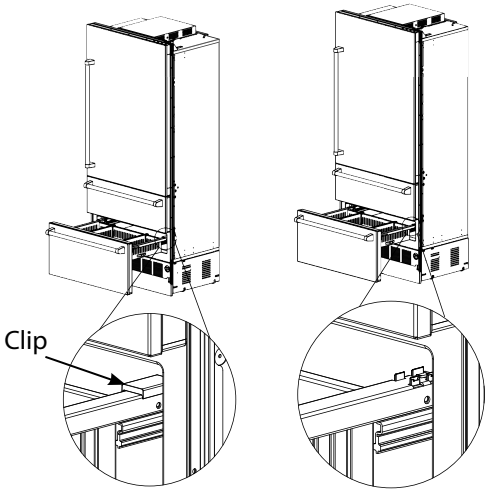

Automatic Ice Maker

The ice maker is located above the upper freezer drawer on the left hand side.

After the refrigerator reaches normal temperature, the ice maker fills with water and begins operating. Under normal conditions, the ice maker will produce seven to nine batches of ice per 24 hour period.

Note: Allow 24 to 48 hours after installation before looking for ice in your ice drawer. You should discard the first three full drawers of ice produced by your refrigerator, and should also throw out the first drawer full of ice your refrigerator produces after extended periods of non-use.

During ice production, the ice maker arm raises and lowers. When the ice bin is full, the ice maker arm automatically turns the ice maker off. To manually stop ice production, raise the ice maker arm. You will hear a definite click when you have the arm in the right position. The ice maker won't produce any more ice until you lower the ice maker arm.

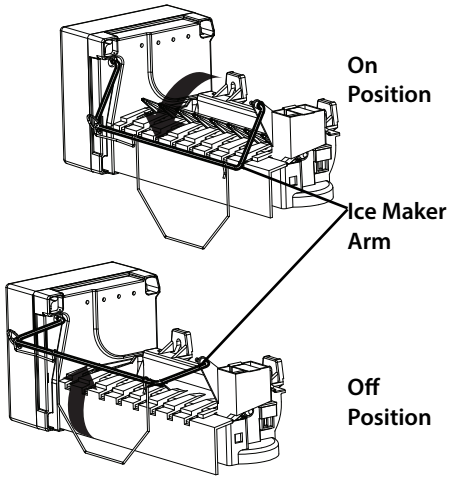

⚠ CAUTION

To avoid damage to ice maker, observe the following:
- **DO NOT** force ice maker arm down or up past stop position.
- **DO NOT** place or store anything in ice bucket.

Ice Bin Removal

To remove the ice bin, pull top freezer drawer open. Raise handles on both sides and pull up. When replacing the ice bin, lower handles before closing drawer.

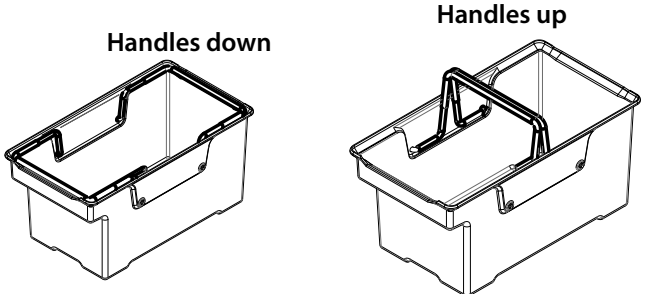

Food Storage Guide

Your refrigerator is equipped with Bluezone® technology, a unique fresh preservation system that helps extend shelf life and maintain quality of the fruits and vegetables in your refrigerator. The Bluezone cleans the refrigerator air of ethylene gas, a naturally occurring ripening agent that comes from fruit like apples, pears, melons, and stone fruit. Ethylene gas causes many vegetables and fruits to ripen faster, discolor, or become bitter. This technology will also kill airborne microbes such as mold or bacteria, which will help keep all food fresh longer. The Bluezone uses a germicidal bulb and a special catalyst to remove odors and reduce flavor transfer from strong smelling items in your refrigerator and only works when the refrigerator is running. When the bulb needs to be replaced (approximately every two years), the Bluezone logo will appear in the refrigerator temperature display. Refer to page 14 for bulb replacement.

Storing Fresh Food

-Wrap or store food in the refrigerator in airtight and moisture-proof material. This prevents food odor and taste transfer. For dated products, check use-by date to ensure freshness.
-To store leafy vegetables, remove store wrapping. Then tear off bruised and discolored areas. Place them in a plastic bag or plastic container and store in your produce drawer.
-For vegetables with skins, such as carrots and peppers, store in plastic bags or containers.
-When refrigerating or freezing fruit, wash the fruit and then let it dry. Store the fruit in plastic bags. Don't wash or hull berries until they are ready to use. Instead, sort and keep berries in their original container in the temperature/humidity drawer, or store in a loosely closed paper bag on the refrigerator shelf.
-Store eggs without washing them. Keep eggs in their original carton .
-Wipe milk cartons. For best storage, place milk on an interior shelf.
-Keep opened butter in covered dish or closed compartment. When storing butter in the freezer, wrap it in freezer packaging.
-When you have leftovers, cover then with plastic wrap, aluminum foil, or store the leftovers in plastic containers with tight lids.
-Store meat in its original wrapping, as long as it's airtight and moisture-proof. Rewrap meat if necessary.
Note: When storing meat longer than the recommended times, freeze the meat.

Recommended storage times:

Chicken	1-2 days	Bacon	5-7 days
Ground Beef	1-2 days	Cold Cuts	3-5 days
Steaks/Roasts	3-5 days	Variety Meats	1-2 days
Cured Meats	7-10 days		

Note: Use fresh fish and shellfish the same day as purchased.

Packaging Food for Freezing

The secret of successful freezing is in the packaging; the way you close and seal a package of food must not allow air or moisture in or out, or the quality of the food will deteriorate while frozen.

Packaging you should not use for freezing includes:

- Bread wrappers
- Non-polyethylene plastic containers
- Containers without lids
- Wax paper or wax-coated freezer wrap
- Thin, semi-permeable wrap

Recommended packaging:

- Rigid plastic containers with tight-fitting lids
- Straight-sided canning/freezing jars
- Heavy-duty aluminum foil
- Plastic-coated paper
- Non-permeable plastic wraps (made from saran film)
- Zip-top freezer bags

Follow package or container instructions for proper freezing methods.

Freezing Foods

DO NOT expect your freezer to quick-freeze large quantities of food; **DO NOT** load more than two to three pounds of unfrozen food per cubic foot within 24 hours. Leave enough space for air to circulate around packages, and be careful to leave enough room at the front so the freezer door can close tightly.

A full freezer stays cold longer than a partially filled one, and a freezer full of meat stays cold longer than a freezer full of baked goods. If food contains ice crystals, it may be safely refrozen, although the quality and flavor may be affected. If the condition of the food is poor, or if you feel it is unsafe, dispose of it. Storage times will vary according to the quality of food, the type of packaging or wrap used (airtight and moisture-proof), and the storage temperature, which should be 0° to 2°F (-18° to -17° C).

⚠ CAUTION

To avoid personal injury or property damage, read and follow all cleaning product manufacturer's directions.

⚠ WARNING



ELECTRICAL SHOCK HAZARD
To avoid electrical shock which can cause severe personal injury or death, turn power disconnect switch to OFF before cleaning. After cleaning, return power disconnect switch to ON position.

Your refrigerator is built to give you many years of dependable service. However, there are a few things you can do to help extend its life. This section tells you how to clean your refrigerator and what to do when going on vacation, moving, or during a power outage.

Interior Surfaces

Wash the interior surfaces of your refrigerator with four tablespoons of baking soda dissolved in one quart of warm water. Use a soft, clean cloth. Rinse these surfaces with warm water, and dry with a soft clean cloth.

DO NOT use the following to clean interior surfaces:

- Abrasive or harsh cleaners, such as ammonia or chlorine bleach
- Concentrated detergents or solvents
- Metal scouring pads

These products can scratch, crack and discolor your refrigerator's surfaces. Also, **NEVER** wash the ice bucket or shelves in the dishwasher. They must be cleaned by hand.

Cleaning Chart

Part	What to Use	How to Clean
Removable parts (shelves, drawers)	Sponge or cloth with mild detergent and warm water	Hand wash, rinse, and dry thoroughly.
Front door panels • stainless steel • painted	Stainless steel cleaner Sponge or cloth with mild detergent and warm water **DO NOT use cleaners containing chlorine bleach.**	Wipe with soft cloth. Hand wash, rinse, and dry thoroughly.
Interior walls (allow freezer to warm up so cloth will not stick)	Sponge, soft cloth or paper towel with baking soda or mild detergent and warm water	Hand wash, rinse, and dry thoroughly.
Door liners and gaskets	Sponge, soft cloth or paper towel with mild detergent and warm water. **DO NOT use cleaning waxes, concentrated detergents, or cleaners containing chlorine bleach on gaskets.**	Wash, wipe, and dry thoroughly.
Plastic parts (covers, panels)	Soft, clean sponge or soft clean cloth with mild detergent and warm water. **DO NOT use paper towels, window sprays, or scouring pads. These can scratch and damage the finish.**	Wash, wipe, and dry thoroughly.
Condenser*	Vacuum cleaner with extended narrow attachment	Remove visible lint and dust build-up on coil.

**** Condenser cleaning is not covered under the warranty***

Condenser Cleaning Indicator
The refrigerator temperature display will be blinking "CL" to indicate that it is time to clean the condenser coil.

Condenser Cleaning:
There is always chance of getting the condenser clogged due to dust in the air, pet hair, etc. We recommend cleaning the condenser once every 6 months. It is always better to clean the condenser coil as soon as you perform any construction activities, or work that produce lots of dusts near the unit.

To clean the condenser:

1. Turn off the main power switch located at the top of unit behind the top access panel as shown in Settings and Functions – Power On/Off switch page 6.

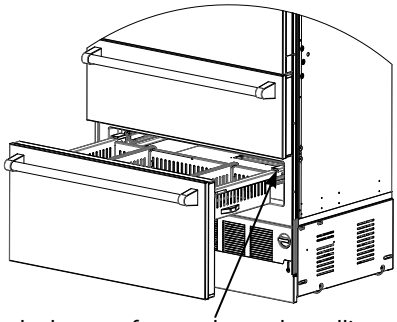

2. Remove the bottom freezer drawer by pulling all the way out, removing the rear clips and lifting out. Details are shown in the freezer section page 10.

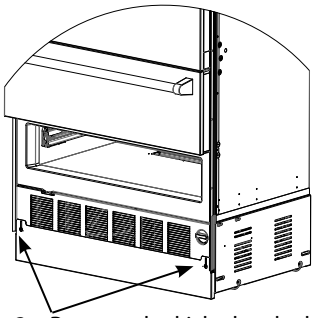

3. Remove the kick plate by loosening two screws and slide out though the key hole

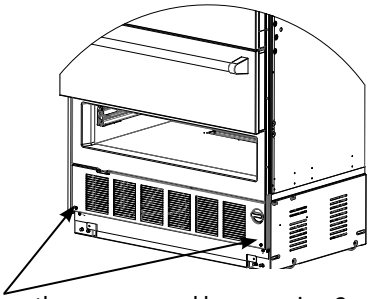

4. Remove the access panel by removing 2 screws as shown here and pull out with force to unsnap the panel

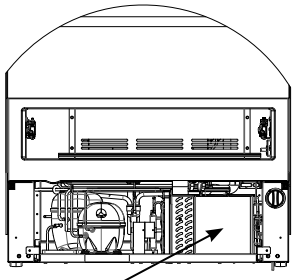

5. Vacuum the front surface of the condenser coil using any house hold vacuum cleaner extension. It is recommended to vacuum the coil rather than using any duster. Duster may damage the fin. Make sure to remove the dust completely out of the coil area.

6. Replace the access panel and kick plate.
7. Turn main power switch on. Replace top access panel.
8. Reset and remove the "CL" from the temperature display by simultaneously pressing the up and down arrow key for 3 seconds.

Glass Shelves
To clean your refrigerator's glass shelves, lift the shelf out by lifting the front and releasing the hooks from the metal track. Then pull the shelf out. Be sure to allow the glass shelves to adjust to room temperature before cleaning. Use a mild detergent with water to clean. Dry glass shelf thoroughly and replace shelf by inserting hooks into metal track and lowering front.

⚠ CAUTION

To avoid personal injury or property damage, handle tempered glass shelves carefully. Shelves may break suddenly if nicked, scratched, or exposed to sudden temperature change.

Door Gaskets
Clean the door gaskets every three months using the same procedures used for interior surfaces. You should apply a light film of petroleum jelly to keep gaskets pliable.

Bluezone Bulb Replacement

When it comes time to replace the Bluezone bulb, Bluezone will appear along the bottom of the refrigerator digital display. A bulb kit (P/N: RBZB7) will need to be purchased from Viking Range, LLC. The new bulb kit can be ordered online at www.vikingrange.com or by calling 1-888-845-4641.

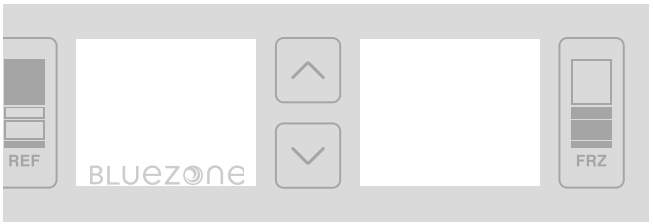

To remove old bulb:
-Clear and remove shelf in front of the bluezone panel.
-Follow the steps illustrated on the right to remove the old bulb.

To install new bulb:
-Remove new bulb from packaging.
-Plug new bulb into socket (Note: you may need to rotate the bulb in order for the pins to line up with the socket holes.
-Replace both the inner and decorative covers.

To clear Bluezone alert:
Once the bulb has been replaced, the Bluezone alert can be cleared from the control panel by holding the refrigerator Selector key for 3 seconds.



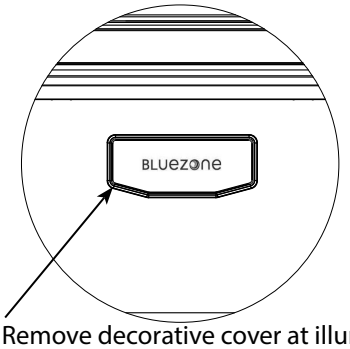

1. Remove decorative cover at illuminated edge using fingertip or fingernail. Cover is held in place with magnets.

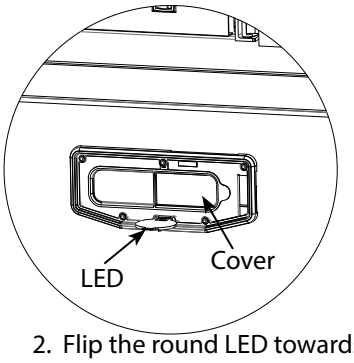

2. Flip the round LED towards you, away from inner cover.

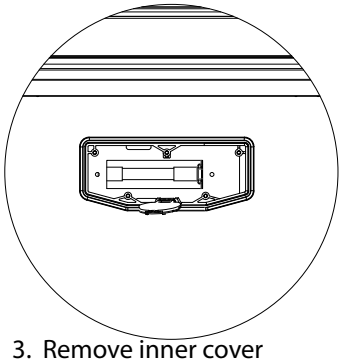

3. Remove inner cover

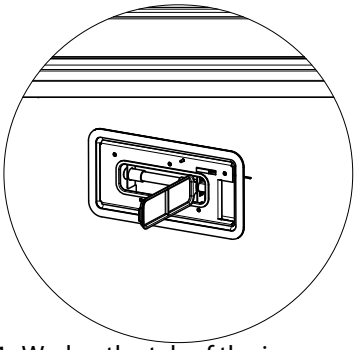

4. Wedge the tab of the inner cover between the bulb and the socket by holding the cover straight.

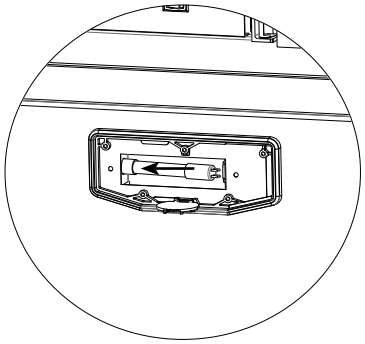

5. Slide bulb to the left until contacts fully disengage. Pull bulb forward to remove.

For additional information on replacing the bulb, visit the product information tab for 7 Series Bottom Mount Refrigerators online at vikingrange.com

Door Stop Adjustment

Your refrigerator is factory set at a 90° degrees with the longer end of the door stop facing away from the door. To change to 105° door stop, locate the door stop on top of the door hinge. Remove the two screws and door stop. Rotate the door stop 180° degrees so that the shorter end faces away from the door. Replace door stop and screws. For additional information on the door stop adjustment, visit the product information tab for 7 Series Bottom Mount Refrigerators online at vikingrange.com

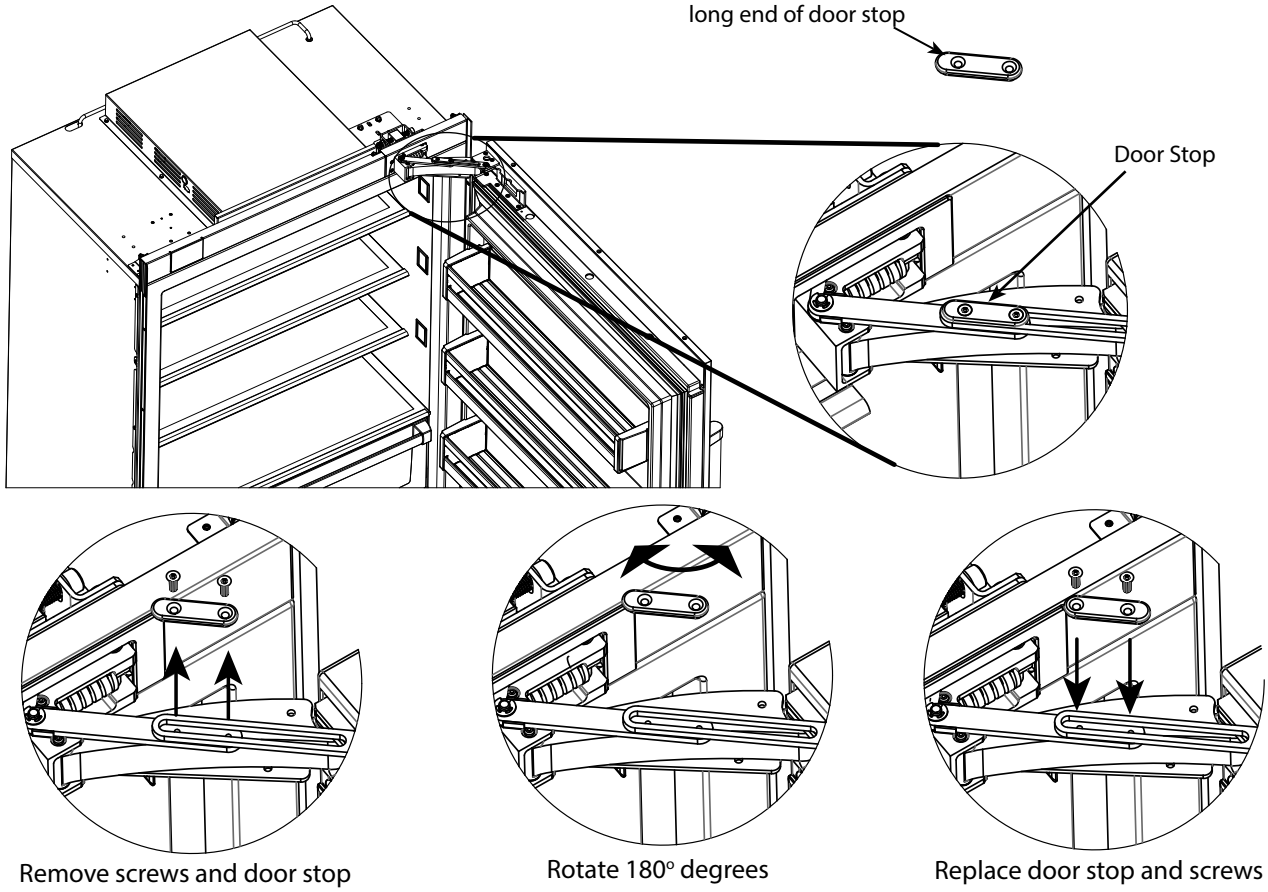

Remove screws and door stop

Rotate 180° degrees

Replace door stop and screws

Saving Energy

You can help your refrigerator use less electricity with these simple tips:

- Open the door as few times as possible. Think about what you need before you open the door. Get everything out at one time. Keep food organized so you will not have to search for what you want. Close door as soon as food is removed.
- **DO NOT** overcrowd the unit so air movement is blocked.
- **DO NOT** set the unit to temperature colder than necessary.

Vacation Tip

When you will be gone from home a short time (less than four weeks), there is no need to shut off your refrigerator. However, be sure to:

- Use any perishables.
- Freeze other items.
- Activate vacation mode.
- Turn off icemaker.

If you will be away from home for a month or more, follow these guidelines:

- Remove all food.
- Turn the power disconnect switch to the off position.
- Clean the unit and door gaskets according to the "Cleaning and Maintenance" chart on page 12.
- Prop doors open with rubber or wood blocks so air can circulate inside. This will keep odor and mold from building up.
- Turn off icemaker and shut-off water supply to icemaker by lifting the ice maker arm. Refer to page 10.

Understanding Sounds You May Hear

Your new refrigerator may make different sounds than your old one. Hard surfaces, such as the ceilings, walls, and cabinets around the unit can make these sounds seem louder. However, these sounds are normal and will soon become familiar; they indicate that your refrigerator is working properly.

Here are some of the noises you may hear and what they are:

- Freezer or refrigerator fresh food fan: sounds like air rushing or whirling
- Sealed system (evaporator and heat exchanger) refrigerant flow: sounds like gurgles, pops or boiling water
- Defrost heater: sizzles, hisses or pops
- Condenser fan: air rushes and whirls
- Compressor: has a high pitched hum or pulsating sound
- Ice maker valve hookup: buzzes when ice maker fills with water. This occurs whether or not the unit is connected to water supply. If the unit is not connected to water supply, stop sound by raising ice maker arm to off position.

Power Interruptions

If electric service to your refrigerator will be interrupted for 24 hours or less, keep the doors to the freezer closed. This helps food stay frozen.

If service will be interrupted longer than 24 hours, remove all frozen food and store it in a frozen food locker, or place approximately 12 pounds of dry ice inside the freezer. This will keep food frozen for two to four days. To keep fresh food in the refrigerator, remove all food from crisper and place approximately 1 pound dry ice in the drawer. Be sure to wear gloves to protect your hands from dry ice burns. If neither a food locker or dry ice is available, you should use or can your perishable food at once.

Most performance problems you might encounter with your new refrigerator will be minor and you should be able to fix them yourself without tools.

Listed in these charts are the most common problems consumers run into with their appliances. Please read through this and see if it can solve your problem before calling for service.

Common Refrigerator Problems

Problem	Possible Cause And/Or Remedy
Unit will not operate	Is the power cord plugged into a live circuit with the proper voltage? Has a household fuse blown or circuit breaker tripped? Is the power switch in the on position?
Unit makes unfamiliar sounds	See "Understanding Sounds You May Hear" on page 14 for descriptions of normal sounds and what makes them.
Water in the defrost pan	This is normal in hot, muggy weather. Make sure the pan is level so it does not overflow.
Ice maker will not operate or ice is not made fast enough	Is the ice function activated? It could take overnight for the freezer to reach the proper temperature. Is the signal arm in the on (down) position? Is the water valve turned on? Is water getting to the water valve? Check water line for leaks.
Lights do not work	Has a household fuse blown or circuit breaker tripped? Is LED light blown? Contact an authorized service agency.
Motor seems to run too long	The motor naturally runs longer on hot days, if the room is too warm, if a large amount of food has been added, or if the doors are opened often.
Temperature display does not match set point	Just plugged in unit, just put in hot food, opened the door for an extended time or frequently. Allow unit to stabilize for 24 hours.
Ice crescents attached at corners	This is normal. They break apart easily. Shake bin occasionally to keep cubes separated.
Off-taste or odor in ice	New plumbing connections can cause discolored or off-flavored ice. Discard the first three harvests of ice. Cubes are stored too long. Throw them away and make a new supply. Food is not wrapped properly Freezer and ice bin need to be cleaned Water may contain minerals. A filter may be needed to remove them. Does the water filter need replacing?

Alarm Digital Display Codes

Alarm Code	Code Explanation
High Temperature Alarm	Alarm will sound and display will flash when temperature exceeds the high temperature allowed. Press alarm button. Sound will mute but display will continue to flash until normal maximum temperature is reached.
Water Filter Alarm	When it is time to change the water filter, the water filter button will illuminate to blue. After filter has been changed, the illuminated button will go off.
Open Door Alarm	If any door or drawer is opened longer than 3 minutes, the open door alarm will sound. Closing the door will turn the open door alarm off.
Long term power loss Alarm	After a long term power loss, the temperature will display a power loss. Press any key to clear the power loss indicator
Bluezone® Bulb Replacement Indicator	When the Bluezone® bulb needs replacement, the thin blue Bluezone® indicator strip will appear along the bottom of the refrigerator display. After replacing the bulb, press and hold the Refrigerator Selector button for 3 seconds to clear display.
Clean Condenser Coil Indicator	The refrigerator temperature display will blink "CL" when it is time to clean the condenser coils.

Service Information

If service is required, call your authorized service agency.

Have the following information readily available:
- Model number
- Serial number
- Date purchased
- Name of dealer from whom purchased

Clearly describe the problem that you are having. If you are unable to obtain the name of an authorized service agency, or if you continue to have service problems, contact Viking Range at (888) 845-4641 or write to:

VIKING RANGE, LLC
PREFERRED SERVICE
111 Front Street
Greenwood, Mississippi 38930 USA

Record the information indicated below. You will need it if service is ever required. The serial number and model numbers for your refrigerator are located on the upper wall, behind the lighting:

Model No. _____ Serial No. _____

Date of Purchase_____ Date Installed_____

Dealer's Name_____

Address _____

_____

If service requires installation of parts, use only authorized parts to insure protection under the warranty.

Keep this manual for future reference.

BUILT-IN BOTTOM-FREEZER REFRIGERATION WARRANTY

TWO YEAR FULL WARRANTY

Built-in bottom-freezer refrigerators and all of their component parts, **except as detailed below*†‡**, are warranted to be free from defective materials or workmanship in normal residential use for a period of two (2) years from the date of original retail purchase or closing date for new construction, whichever period is longer. Viking Range, LLC, warrantor, agrees to repair or replace, at its option, any part which fails or is found to be defective during the warranty period.

***FULL NINETY (90) DAY COSMETIC WARRANTY:** Product is warranted to be free from cosmetic defects in materials or workmanship (such as scratches on stainless steel, paint/porcelain blemishes, etc.) for a period of ninety (90) days from the date of original retail purchase or closing date for new construction, whichever period is longer. Any defects must be reported to the selling dealer within ninety (90) days from date of original retail purchase. Viking Range, LLC uses high quality processes and materials available to produce all color finishes. However, slight color variation may be noticed because of the inherent differences in painted parts and porcelain parts as well as differences in kitchen lighting, product locations, and other factors. Therefore, this warranty does not apply to color variation attributable to such factors.

†FULL NINETY (90) DAY WARRANTY IN "RESIDENTIAL PLUS" APPLICATIONS: This full warranty applies to applications where use of the product extends beyond normal residential use, but the warranty period for products used in such applications is ninety (90) days. Examples of applications covered by this warranty are bed and breakfasts, fire stations, private clubs, churches, yachts, etc. Under this "Residential Plus" warranty, the product, its components and accessories are warranted to be free from defective material or workmanship for a period of ninety (90) days from the date of original retail purchase. This warranty excludes use of the product in all commercial locations such as restaurants, food service locations and institutional food service locations.

SIX YEAR FULL WARRANTY ON SEALED REFRIGERATION PARTS AS LISTED

Any sealed refrigeration system component, as listed below, is warranted to be free from defective materials or workmanship in normal household use during the third through the sixth year from the date of original retail purchase. Viking Range, LLC, warrantor, agrees to repair or replace, at its option, any part which fails or is found to be defective during the warranty period.

Sealed Refrigeration System Components: Compressor, Evaporator, Condenser, Connecting Tubing, Dryer/Strainer

TWELVE YEAR LIMITED WARRANTY ON SEALED REFRIGERATION PARTS AS LISTED

Any sealed refrigeration system component, as listed above, which fails due to defective materials or workmanship in normal household use during the seventh through the twelfth year from the date of original retail purchase will be repaired or replaced, free of charge for the part itself, with the owner paying all other costs, including labor.

TERMS AND CONDITIONS

This warranty extends to the original purchaser of the product warranted hereunder and to each transferee owner of the product during the term of the warranty and applies to products purchased and located in the United States, Canada, Mexico and the Caribbean (excluding Cuba, Dominican Republic, and Haiti). Products must be purchased in the country where service is requested. If the product or one of its component parts contains a defect or malfunction during the full warranty period after a reasonable number of attempts by the warrantor to remedy the defect or malfunction, the owner is entitled to either a refund or replacement of the product or its component part or parts. Replacement of a component part includes its free installation, except as specified under the limited warranty. Under the terms of this warranty, service must be performed by a factory authorized Viking Range, LLC service agent or representative. Service will be provided during normal business hours, and labor performed at overtime or premium rates shall not be covered by this warranty.

Owner shall be responsible for proper installation, providing reasonable and necessary maintenance, providing proof of purchase upon request, and making the appliance reasonably accessible for service. The return of the Owner Registration Card is not a condition of warranty coverage. You should, however, return the Owner Registration Card so that Viking Range, LLC can contact you should any question of safety arise which could affect you.

This warranty gives you specific legal rights, and you may also have other rights which may vary from jurisdiction to jurisdiction.

WHAT IS NOT COVERED BY THIS WARRANTY: This warranty shall not apply to damage resulting from abuse, failure to provide reasonable and necessary maintenance, accident, delivery, negligence, natural disaster, loss of electrical power to the product for any reason, alteration, outdoor use, improper installation, improper operation, or repair or service of the product by anyone other than an authorized Viking Range, LLC service agency or representative. This warranty does not apply to commercial usage.

LIMITATION OF REMEDIES AND DURATION OF IMPLIED WARRANTY

OWNER'S SOLE AND EXCLUSIVE REMEDY FOR A CLAIM OF ANY KIND WITH RESPECT TO THIS PRODUCT SHALL BE THE REMEDIES SET FORTH ABOVE. VIKING RANGE, LLC IS NOT RESPONSIBLE FOR CONSEQUENTIAL OR INCIDENTAL DAMAGE, INCLUDING BUT NOT LIMITED TO FOOD OR MEDICINE LOSS, DUE TO PRODUCT FAILURE, WHETHER ARISING OUT OF BREACH OF WARRANTY, BREACH OF CONTRACT OR OTHERWISE. Some jurisdictions do not allow the exclusion or limitation of incidental or consequential damages, so the above limitation or exclusions may not apply to you. **ANY IMPLIED WARRANTIES OF MERCHANTABILITY OR FITNESS FOR A PARTICULAR PURPOSE APPLICABLE TO THIS PRODUCT ARE LIMITED IN DURATION TO THE PERIOD OF COVERAGE OF THE APPLICABLE EXPRESS WRITTEN LIMITED WARRANTIES SET FORTH ABOVE.** Some states do not allow limitations on how long an implied warranty lasts, so the above limitation may not apply to you.

WARRANTY SERVICE

To obtain warranty service, contact an authorized Viking Range, LLC service agent, or Viking Range, LLC, 111 Front Street, Greenwood, Mississippi 38930, (888) 845-4641. Provide model and serial number and date of original purchase or closing date for a new construction. For the name of your nearest authorized Viking Range, LLC service agency, call Viking Range, LLC.

IMPORTANT: Retain proof of original purchase to establish warranty period.

Specifications subject to change without notice.

Viking Range, LLC
111 Front Street
Greenwood, Mississippi 38930 USA
(662) 455-1200

For product information, call 1-888-(845-4641)
or visit the our web site at vikingrange.com

055155-000D EN (030119)