WINE COOLER

User Manual

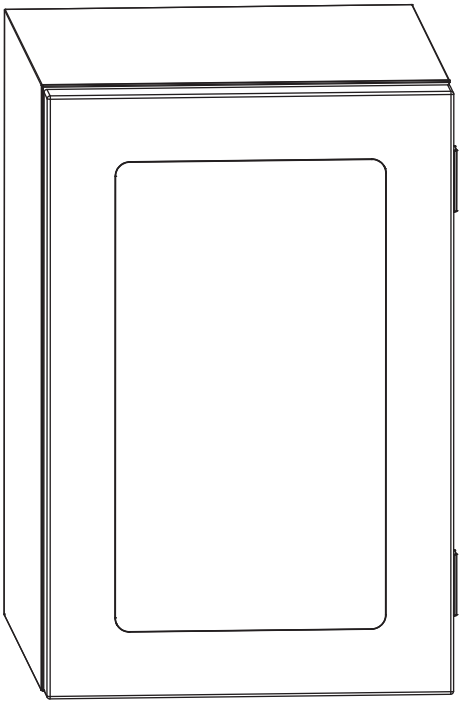

Model No.: JC-18UEL-F

Thank you for purchasing this product! Please read the instructions carefully before using your portable ice maker. If you have any question about the product, please contact us via customer service number: 213-446-7172.

GENERAL SAFETY RULES

Before you use your refrigerator, please read this owner's manual carefully.
Use this appliance only for its intended purpose as described in this owner's manual.

DANGER: Risk of child entrapment. Before you throw away your old refrigerator or freezer:

- Take off the doors.
- Leave the shelves in place so that children may not easily climb inside.

- The appliance must be correctly installed and connected to the power supply in accordance with the installation instructions before it is used. (See: "Installing Your Beverage Center").
- The main power supply must be properly grounded.
- This refrigerator must be positioned so that the plug is accessible. Never unplug you unit often by pulling on the power cord. Always grasp the plug firmly and pull straight out from the outlet.
- Do not use an extension cord as this can negatively affect the performance of the unit.
- When transporting the refrigerator, keep the unit in the upright position. Do not tilt the appliance beyond 45° or place the unit in upside down position. Do not tip over.
- Do not touch the cooled surfaces while the appliance operates, especially not with wet hands, because the skin may stick to the cold surfaces.
- It is recommended that the refrigerator is positioned away from any combustible sources such as gas, petrol, alcohol, lacquer and banana oil, etc. The aforementioned objects should not be stored in the refrigerator under any circumstances.
- If the unit fails to cool properly, dispose of spoiled food as needed.
- Unplug your unit before cleaning or before making any repairs. NOTE: If for any reason this product requires service, we strongly recommend that a certified technician perform the service. Repairs made by non-qualified personnel will void the warranty.
- Do not defrost the appliance with other electric devices (hair dryer etc.) and never scrape the ice or frost layer with sharp tools. Warning: Do not damage the refrigerant circuit.
- The rating plate is inside the appliance or outside on the rear or side wall.
- This appliance is not intended for use by persons (including children) with reduced physical, sensory or mental capabilities, or lack of experience and knowledge, unless they have been given supervision or instruction concerning use of the appliance by a person responsible for their safety. Children should be supervised to ensure that they do not play with the appliance.
- Do not run cord over carpeting or other heat insulators. Do not cover the cord. Keep cord away from traffic areas, and do not submerge in water. If the supply cord is damaged, it must be replaced by the manufacturer or its service agent or a similarly qualified person in order to avoid a hazard. Repair or replace immediately all electric service cords that have become frayed or otherwise damaged. Do not use a cord that shows cracks or abrasion damage along its length, the plug or the connector end.
- Do not operate your refrigerator in the presence of explosive fumes.
- WARNING - Do not use the flame or catch the fire near the unit.
- DANGER - Risk Of Fire Or Explosion. Flammable Refrigerant Used. To Be Repaired Only By Trained Service Personnel. Do Not Puncture Refrigerant Tubing.
- CAUTION - Risk Of Fire Or Explosion. Dispose Of Property In Accordance With Federal Or Local Regulations. Flammable Refrigerant Used.
- CAUTION – Risk Of Fire Or Explosion. Flammable Refrigerant Used. Consult Repair Manual/Owner's Guide Before Attempting To Service This Product. All Safety Precautions Must be Followed.
- CAUTION – Risk Of Fire Or Explosion Due To Puncture Of Refrigerant Tubing; Follow Handling Instructions Carefully. Flammable Refrigerant Used.

Staple your receipt to your manual.
You will need it to obtain warranty service.

Parts and Features

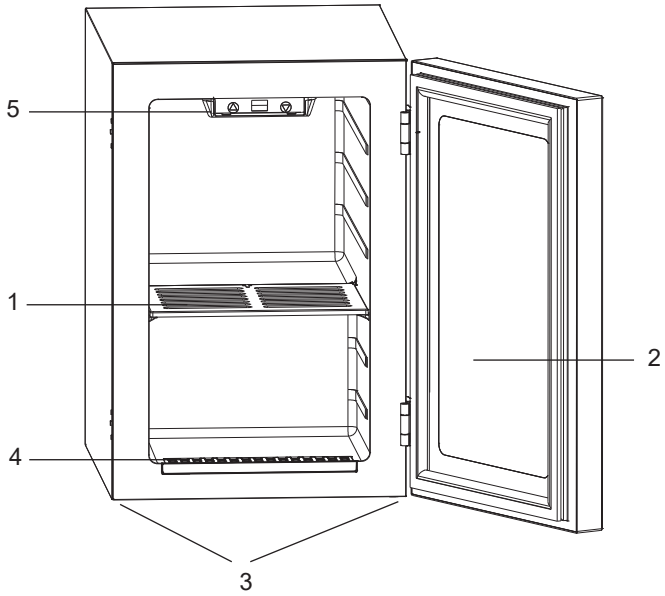

1. Plastic Shelf
2. Door
3. Adjustable Leveling Legs
4. Drip tray
5. Thermostat Control



DANGER – Risk Of Fire Or Explosion. Flammable Refrigerant Used. To Be Repaired Only By Trained Service Personnel. Do Not Puncture Refrigerant Tubing.

CAUTION – Risk Of Fire Or Explosion. Flammable Refrigerant Used. Consult Repair Manual/Owner's Guide Before Attempting To Service This Product. All Safety Precautions Must be Followed.

CAUTION – Risk Of Fire Or Explosion. Dispose Of Property In Accordance With Federal Or Local Regulations. Flammable Refrigerant Used.

CAUTION – Risk Of Fire Or Explosion Due To Puncture Of Refrigerant Tubing; Follow Handling Instructions Carefully. Flammable Refrigerant Used.

Installing Your Beverage Center

WARNING: Before plugging in your Beverage Center, allow it at least 4 hours to stand upright for the refrigerant fluid to settle.

Unpacking Your Beverage Center

1. Remove all packaging materials. These include the foam base and all adhesive tape holding the beverage center accessories inside and outside.
2. Inspect and remove any remaining packing, tape or printed materials before powering on the Beverage Center.

Leveling Your Beverage Center

- Your Beverage Center has two leveling legs which are located in the front corners. After properly placing your Beverage Center in its final position, you can level your beverage and and wine center.

- Leveling legs can be adjusted by turning them clockwise to lower your Beverage Center or by turning them counterclockwise to raise your Beverage Center. The Beverage Center door will close more easily when the two front leveling legs are extended slightly.

Proper Air Circulation

- To ensure that your Beverage Center works at the maximum efficiency it was designed for, you should install it in a location where there is proper air circulation and electrical connections.
- The following are recommended clearances around the beverage center:
  Sides.....2" (50mm)
  Top.....2" (50mm)
  Back.....2" (50mm)
- Do not over fill your Beverage Center for proper cooling.

Note: If your Beverage Center has been tilted for any reason, wait 24 hours before plugging it in.

Drip Tray

- Ensure the drip tray in the rear of the unit is in the proper position.

WARNING: ELECTRICAL REQUIREMENT - SHOCK HAZARD

Electrical Requirement

- Make sure there is a suitable power outlet (115 volts, 15 amps outlet) with proper grounding to power the Beverage Center.
- Avoid the use of three prong adapters or cutting off the third grounding prong in order to accommodate a two prong outlet. This is a dangerous practice since it provides no effective grounding for the Beverage Center and may result in shock hazard.

Installation Limitations

- Do not install your Beverage Center in any location not properly insulated or heated (e.g., garage). Your Beverage Center was not des igned to operate in ambient temperature settings below 55° Fahrenheit.
- Select a suitable location for the Beverage Center on a hard even surface away from direct sunlight or heat source (e.g., radiators, baseboard heaters, cooking appliances). Any floor unevenness should be corrected with the leveling legs located on the front bottom corners of the Beverage Center.
- Your Beverage Center is designed for freestanding installation only. It is not designed for built-in application.
  Note: This unit is for indoor use only.

Use of Extension Cord

- Avoid the use of an extension cord because of potential safety hazards under certain conditions. If it is necessary to use an extension cord, use only a 3-wire extension cord that has a 3-blade grounding plug and a 3-slot outlet that will accept the plug. The marked rating of the extension cord must be equal to or greater than the electrical rating of the appliance.

Using Your Beverage Center

Startup

Connect the power cord to a standard wall outlet. Do not use a GFCI outlet to connect the unit (see page 4). After connection, you will immediately hear a short beep.

Temperature -Adjustable Thermostat Control

The default temperature is 43ºF. Use the △ and ▽ buttons to set the desired temperature between the range of 40ºF - 61ºF.

The display will flash while the temperature is being set. After a few seconds, it will revert to its current internal temperature reading. The digital display reading will adjust as the unit cools. While the unit is adjusting to the new setting, press the △ or ▽ buttons to view the selected temperature setting.

If there is a power outage, the unit will revert to the last temperature setting once power is restored.

Long press the ▽ button for 3 seconds to turn the LED light on and off.

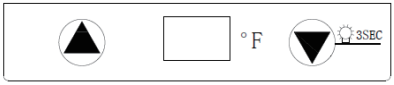

Loading Beverages

When first loading the beverage center to full capacity, we recommend the following steps to effectively cool a large number of beverages.

1. Use the Adjustable Thermostat Control to set the temperature to 43ºF (also the default temperature).
2. Allow the beverage center to cool for a minimum of two hours.
3. Load the beverages.
4. After initially filling with beverages, the internal temperature will rise as indicated on the display.
5. Once the beverage center has cooled the beverages to 43ºF, use the Adjustable Thermostat Control to select a desired cooler internal temperature (lowest temperature setting is 40ºF).
6. Allow several hours for the beverage center to cool to the desired lower temperature.

Note: It is normal for temperature variances to occur inside the unit, and areas near the door will have slightly warmer temperatures.

Shelving

To remove or replace a full-width slide-out shelf:

1. Gently tilt the shelf up and slide forward until the shelf has been completely removed.
2. To replace the shelf, gently slide the shelf back.

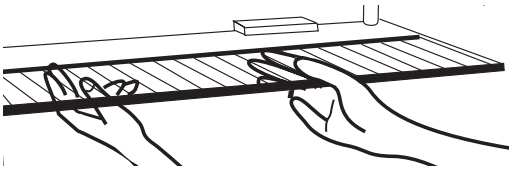

Normal Operating Sounds You May Hear

- The sounds of boiling water and gurgling or the slight vibrations are the result of the refrigerant circulating through the cooling coils.
- Compressor makes operational sounds when cycling on and off.

Proper Beverage Center Care & Cleaning

Cleaning and Maintenance

⚠ Warning: To avoid electric shock, always unplug your beverage center before cleaning. Ignoring this warning may result in death or injury.

⚠ Caution: Before using cleaning products, always read and follow manufacturer's instructions and warnings to avoid personal injury or product damage.

General:
- Prepare a cleaning solution of 3-4 tablespoons of baking soda mixed with warm water. Use sponge or soft cloth, dampened with the cleaning solution, to wipe down your beverage center.
- Rinse with clean warm water and dry with a soft cloth.
- Do not use harsh chemicals, abrasives, ammonia, chlorine bleach, concentrated detergents, solvents or metal scouring pads. Some of these chemicals may dissolve, damage and/or discolor your Beverage Center.

Door Gaskets:
- Clean door gaskets every three months according to general instructions. Gaskets must be kept clean and pliable to assure a proper seal.
- Petroleum jelly applied lightly on the hinge side of gaskets will keep the gasket pliable and ensure a good seal.

Defrosting Your Beverage Center

Your Beverage Center is designed with a manual defrost system. The Beverage Center surfaces will defrost, when the unit is unplugged. Water from the unit is disposed of automatically, by means of being channeled onto a drip tray located on the compressor. Heat transfer from the compressor causes this water to evaporate.

Power Interruptions

- Occasionally there may be power interruptions due to thunderstorms or other causes. Remove the power cord from AC outlet when a power outage occurs. When power has been restored, replug power cord to AC outlet.

Vacation and Moving Care

- For long vacations or absences, empty contents from Beverage Center, unplug the unit and clean the Beverage Center and door gaskets according to "General cleaning" section. Prop doors open, so air can circulate inside. When moving, always move the Beverage Center vertically. Do not move with the unit lying down. Possible damage to the sealed system could occur.

Troubleshooting

Beverage Center Does Not Operate

- Check if Beverage Center is plugged in.
- Check if there is power at the ac outlet, by checking the circuit breaker.
- Check if power pad is on.

Temperature appears too warm

- Frequent door openings.
- Allow time for recently added beverages to reach proper temperature.
- Check gaskets for proper seal.
- Adjust temperature control to the require cooler stting.

Temperature is too cold

- If temperature control setting is too cold, adjust to a warmer setting and allow several hours for temperature to adjust.

Beverage Center runs too frequently

- This may be normal to maintain constant temperature in high temperature and humid days.
- Doors may have been opened frequently or for an extended period of time.
- Check gasket for proper seal.
- Check to see if doors are completely closed.

Moisture build up on interior or exterior of the beverage center

- This is normal during the periods of high humidity.
- Prolonged or frequent door openings.
- Check door gaskets for proper seal.

Beverage Center door does not shut properly

- Place Beverage Center on a level surface.
- Check for blockages.

Thank you for purchasing this product! If you have any questions about the product, such as missing parts, damaged products, product assembling, and operation, please contact us via customer service number: **213-446-7172.**

IMPORTANT

Please call our customer service department for any consulting:

213-446-7172

(8:30am - 5:30pm P.S.T.)
DATED PROOF OF PURCHASE IS REQUIRED FOR WARRANTY SERVICE.

AVIS

Veuillez appeler le service à la clientèle pour toutes questions au:

213-446-7172

(8:30am - 5:30pm P.S.T.)
PREUVE D'ACHAT ORIGINALE REQUISE POUR SERVICE DE GARANTIE.

IMPORTANTE

Sólo hay que llamar nuestro departamento de servicio
al cliente en caso de tener preguntas o inquietudes:

213-446-7172

(8:30am - 5:30pm P.S.T.)
SE REQUIERE PRUEBA DE COMPRA CON FECHA PARA SERVICIO BAJO GARANTÍA.

ROWAN ELECTRIC APPLIANCE LLC
Phone: 213-4467172