OWNER'S GUIDE

READ AND SAVE THESE INSTRUCTIONS

REFRIGERATOR

P/N 218656300F (9809)

Product Registration

This **Owner's Guide** will instruct you on how to properly operate and care for your product. Please read through the information contained in your literature pack to learn more about your new appliance.

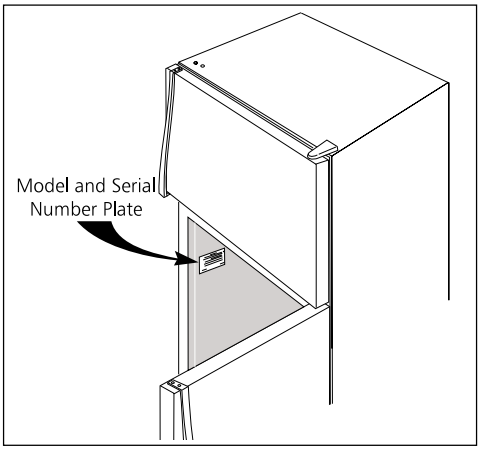

Record Your Model and Serial Numbers

Record the Model No. and Serial No. of this refrigerator in the space provided below. These numbers are found on the serial plate located on the top left wall of the refrigerator compartment.

Model No. _____

Serial No. _____

Register Your Product

The self-addressed PRODUCT REGISTRATION CARD should be filled in completely, signed and returned to Frigidaire, or, in Canada, Frigidaire Canada.

Contents

This Owner's Guide provides specific operating instructions for your model. Use the refrigerator only as instructed in this Owner's Guide.

2	**Product Registration**
3	**Important Safety Instructions**
3	For Your Safety
3	Child Safety
3	Electrical Information
3	Other Precautions
4	**First Steps**
4	Location
4	Installation
4	Door Opening
4	Leveling
4	Cleaning
5	**Energy Saving Ideas**
5	**Setting the Controls**
5	Temperatures
5	Energy Saver Switch
5	Moisture
6	**Fresh Food Storage**
7-8	**Care and Cleaning**
7	Inside
7	Outside
7	Replacing the Light Bulb
8	Vacation and Moving Tips
8	**Automatic Ice Maker**
8	Ice Maker Tips
8-10	**Reversible Door Instructions**
11-13	**Avoid Service Checklist**
13	**Normal Operating Sounds**
14	**Warranty (United States)**
15	**Service Information (Canada)**
16	**Warranty (Canada)**

Versión en español

Si desea obtener una copia en español de este Manual del Usuario, sírvase escribir la dirección que se incluye a continuación. Solicite la P/N 218656400.

Spanish Owner's Guides
Frigidaire Home Products
P.O. Box 212378
Augusta, GA 30917

© 1998 White Consolidated Industries, Inc.
All rights reserved.

Important Safety Instructions

Proper Disposal of Your Refrigerator/Freezer

WARNING Risk of child entrapment. Child entrapment and suffocation are not problems of the past. Junked or abandoned refrigerators or freezers are still dangerous—even if they will sit for "just a few days." If you are getting rid of your old refrigerator or freezer, please follow the instructions below to help prevent accidents.

BEFORE YOU THROW AWAY YOUR OLD REFRIGERATOR/FREEZER:

- Remove doors.
- Leave shelves in place so children may not easily climb inside.

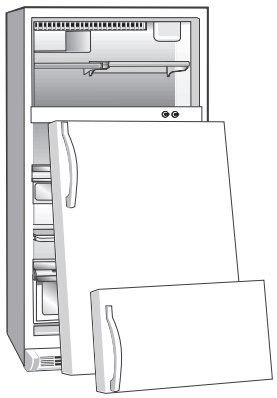

WARNING Avoid fire hazard or electric shock. Do not use an extension cord or an adapter plug. Do not remove any prong from the power cord.

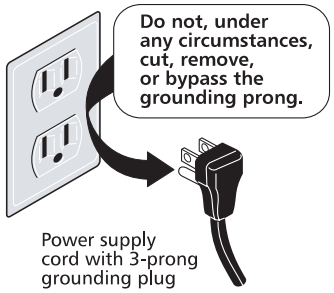

Read all instructions before using this refrigerator.

WARNING For Your Safety

Do not store or use gasoline or other flammable vapors and liquids in the vicinity of this or any other appliance. Read product labels for flammability and other warnings.

WARNING Child Safety

- Destroy carton, plastic bags, and any exterior wrapping material immediately after the refrigerator is unpacked. Children should never use these items for play. Cartons covered with rugs, bedspreads, plastic sheets or stretch wrap may become airtight chambers and can quickly cause suffocation.
- Remove all staples from the carton. Staples can cause severe cuts and destroy finishes if they come in contact with other appliances or furniture.
- An empty, discarded ice box, refrigerator or freezer is a very dangerous attraction to children. **Remove the door of any appliance that is not in use, even if it is being discarded.**

WARNING Electrical Information

These guidelines must be followed to ensure that safety mechanisms in the design of this refrigerator will operate properly.

- **The refrigerator must be plugged into its own 115 Volt, 60 Hz, AC only electrical outlet.** The power cord of the appliance is equipped with a 3-prong grounding plug for your protection against shock hazards. It must be plugged directly into a properly grounded 3-prong receptacle. The receptacle must be installed in accordance with local codes and ordinances. Consult a qualified electrician. DO NOT USE AN EXTENSION CORD OR AN ADAPTER PLUG.
- If voltage varies by 10 percent or more, performance of your refrigerator may be affected. Operating the refrigerator with insufficient power can damage the compressor. Such damage is not covered under your warranty. If you suspect your voltage is high or low, consult your power company for testing.
- To prevent the refrigerator from being turned off accidentally, do not plug the unit into an outlet controlled by a wall switch or pull cord.
- Do not pinch, knot, or bend the power cord in any manner.

WARNING Other Precautions

- Never unplug the refrigerator by pulling on the power cord. Always grip the plug firmly and pull straight out from the receptacle.
- To avoid electrical shock, unplug the refrigerator before cleaning and before replacing a light bulb. **Note:** Turning the control to OFF turns off the compressor, but does not disconnect power to the light bulb or other electrical components.
- Do not operate the refrigerator in the presence of explosive fumes.
- If the refrigerator has an automatic ice maker, avoid contact with any moving parts.

First Steps

Before starting the refrigerator, follow these important first steps:

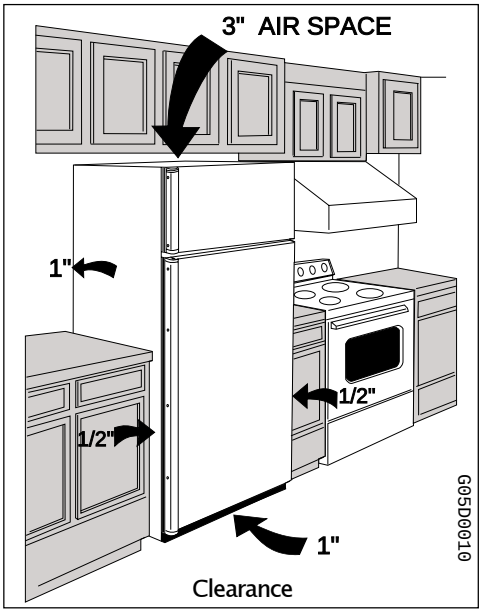

Clearance

Proper air circulation and leveling will ensure efficient operation.

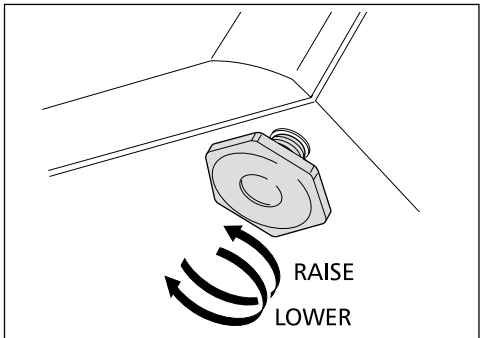

Adjusting Screw-type Levelers (some models)

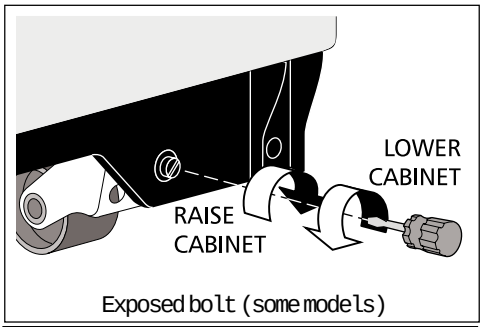

Exposed bolt (some models)

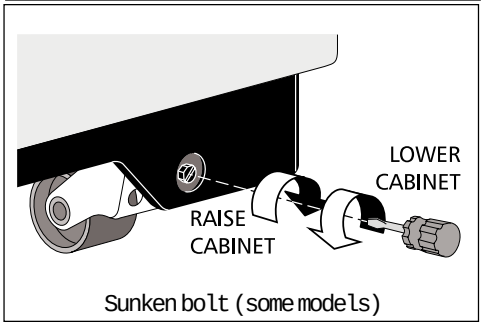

Sunken bolt (some models)

Location

- Choose a place that is near a grounded electrical outlet. DO NOT use an extension cord or an adapter plug.
- If possible, place the refrigerator out of direct sunlight and away from the range, dishwasher or other heat sources.
- The refrigerator must be installed on a floor that is level and strong enough to support a fully loaded refrigerator.
- Consider water supply availability for models equipped with an automatic ice maker.

Installation

- Do not install the refrigerator where the temperature will drop below 60°F (15°C) or rise above 110°F (43°C). The compressor will not be able to maintain proper temperatures.
- Allow space around the unit for good air circulation. Leave a 1 inch (25 mm) space behind and a 3 inch (75 mm) space above the refrigerator for adequate circulation.
- In a recessed installation, allow an extra 1/2 inch (10-15 mm) on each side for ease of installation.
- For best circulation, elevate the unit 1 inch (25 mm) from the floor, especially if the floor is carpeted.

Door Opening

The doors should open to allow easy access to a counter when removing food.

- Do not position the refrigerator so you have to walk around the refrigerator doors.
- Reverse the doors if necessary. See "Reversible Door Instructions."

Leveling

All four corners of refrigerator must rest firmly on a solid floor. Some models are equipped with adjustable screw-type levelers. Others are equipped with rollers. If your refrigerator did not come with rollers, they can be purchased from your dealer.

- **To adjust screw-type levelers (some models):** Tip the cabinet back slightly, and raise adjusting bolts as needed.
- **To adjust the front rollers (some models):** Use a screwdriver, 3/8" socket wrench, or nutdriver to adjust rollers as shown.

RAISE THE FRONT of cabinet enough so doors will close freely when opened halfway. Level cabinet side to side.

Cleaning

- Wash the inside, all removable parts and the outside with mild detergent and warm water. Wipe dry. **DO NOT USE HARSH CLEANERS ON THESE SURFACES.**
- Do not use razor blades or other sharp instruments which can scratch the appliance surface, when removing adhesive labels. Any glue left from the tape or energy label can be removed with a mixture of warm water and mild detergent, or, touch the residue with the sticky side of tape already removed.
- DO NOT REMOVE THE SERIAL PLATE.

Energy Saving Ideas



- Locate the refrigerator in the coolest part of the room, out of direct sunlight and away from heating ducts or registers. Do not place the refrigerator next to heat-producing appliances such as a range, oven or dishwasher. If this is not possible, a section of cabinetry or an added layer of insulation between the two appliances will help the refrigerator operate more efficiently.
- Level the refrigerator so the doors close tightly.
- Refer to this Owner's Guide for the suggested refrigerator settings.
- Periodic cleaning of the condenser will help the refrigerator run more efficiently. See Outside in the "Care and Cleaning" section.
- Do not overcrowd the refrigerator or block cold air vents. Doing so causes the refrigerator to run longer and use more energy. Shelves should not be lined with aluminum foil, wax paper or paper toweling. Liners interfere with cold air circulation, making the refrigerator less efficient, which could cause food spoilage.
- Cover foods and wipe containers dry before placing them in the refrigerator. This cuts down on moisture build-up inside the unit.
- Organize the refrigerator to reduce door openings. Remove as many items as needed at one time and close the door as soon as possible.

Setting the Controls

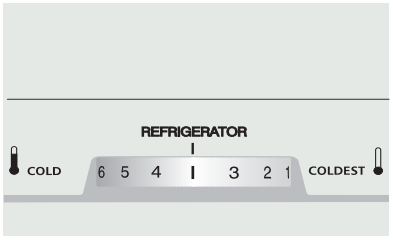

Refrigerator Control

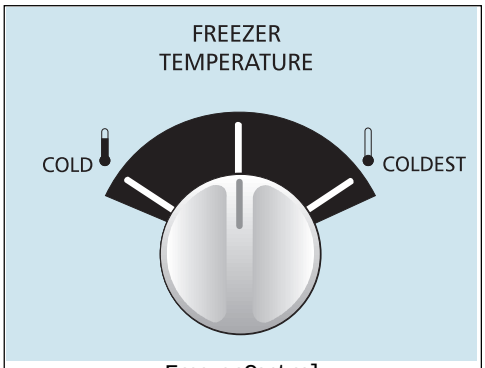

Freezer Control

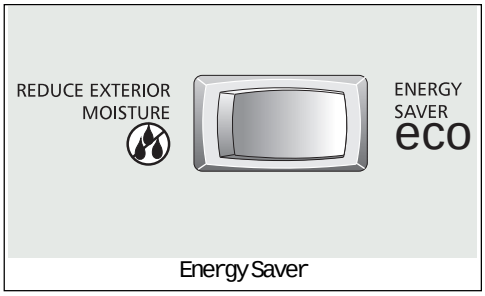

Energy Saver

Cool Down Period

To ensure safe food storage, allow the refrigerator to operate with the doors closed for at least 8 to 12 hours before loading with food.

Refrigerator and Freezer Controls

- To start out, set control dials to the midpoint for a trial period of 24 hours.

Temperatures

- After 24 hours, **adjust the controls as needed. Adjust temperatures one number at a time.** For colder temperatures, turn the dial toward COLDEST. For warmer temperatures, turn the dial toward COLD. The temperature will increase or decrease, but not necessarily by 1, 2, or 3 degrees.

An adjustment made to one compartment may require an adjustment to the other.

- Turning the refrigerator control will change the temperature in **BOTH** compartments. **If the refrigerator control is turned to OFF, cooling stops in both compartments.**
- Turning the freezer control will change only the temperature in the freezer compartment.

To maintain temperatures, a fan circulates air in the refrigerator and freezer compartments. For good circulation, do not block cold air vents with food items.

Energy Saver Switch (some models)

If your refrigerator is equipped with an Energy Saver Switch, keep it set on ENERGY SAVER for lowest energy usage.

Moisture

During humid weather, or if moisture appears on the cabinet between the doors, set switch to REDUCE EXTERIOR MOISTURE. A heater will warm the surface and allow moisture to evaporate.

Fresh Food Storage

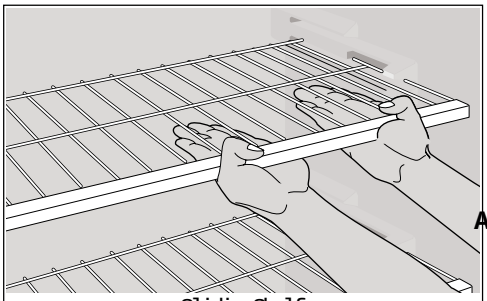

Sliding Shelf

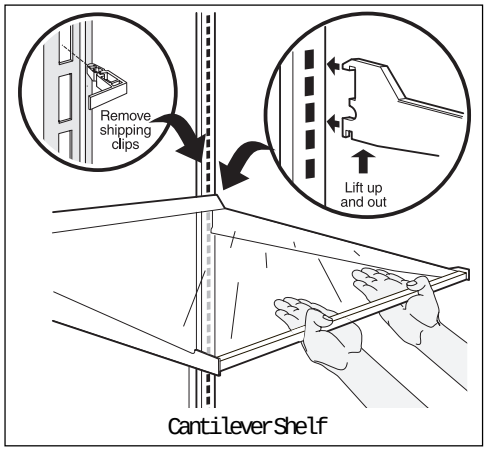

Cantilever Shelf

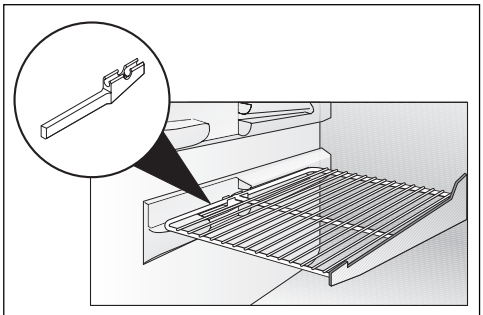

Combination Cantilever/Sliding Shelf with Plastic Clip

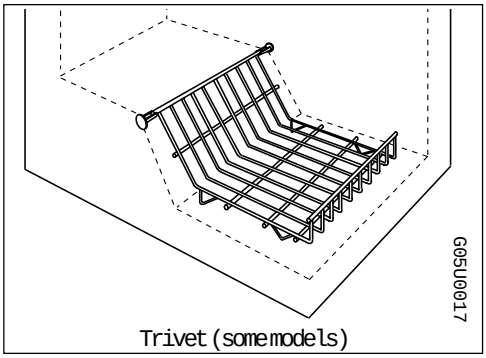

Trivet (some models)

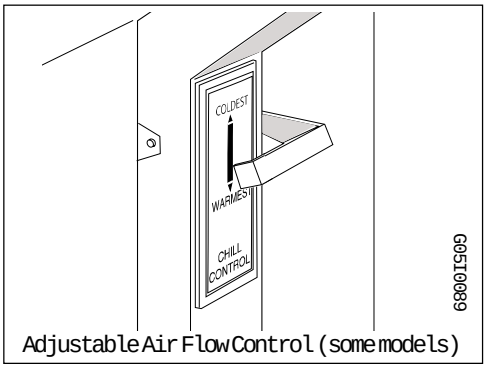

Adjustable Air Flow Control (some models)

Shelves

Your *Spillfree*™ glass shelves (some models) catch and hold accidental spills.

Some refrigerator shelves are easily adjustable to suit individual needs. Some models have sliding shelves, others have cantilever shelves, or both. Before adjusting shelves, remove all food. The shipping clips, which stabilize the shelves for shipping, may be removed and discarded.

Adjustments:

To adjust sliding shelves, remove by pulling forward to the stop position, then lift the front edge up and pull out. Replace on any pair of rails by reversing this procedure.

To adjust cantilever shelves (shelves supported at the rear of the refrigerator), lift the back of the shelf up and out. Replace shelf by inserting hooks at rear into wall bracket. Lower and lock into position.

To adjust combination cantilever/sliding shelves, remove shelf by lifting hooks up and out of rear wall bracket. Then flex plastic clip towards center of refrigerator and pull shelf straight out. Replace shelf by sliding plastic clip past sidewall support. Then lock hooks at rear into wall bracket. **Note:** Plastic clip will automatically fit secure against sidewall.

Door Storage

Door shelves are provided for convenient storage of jars, bottles, and cans. Items used often are available for quick selection.

The dairy compartment is warmer than the general food storage section and is intended for short term storage of cheese, spreads, or butter.

Some models have adjustable door bins which can be moved to suit individual needs. To move the bins, remove by lifting straight up. Place the bin in the desired position and lower over supports.

Crispers (some models)

The crispers, located under the bottom refrigerator shelf, are designed for storing fruits, vegetables, and other fresh produce. Wash items in clear water and remove excess water before placing in the crispers. Items with strong odors or high moisture should be wrapped before storing.

Deli Drawer (some models)

Some models are equipped with a deli drawer for storage of luncheon meats, spreads, cheeses, and other deli items.

Trivet (some models)

Some models are equipped with a trivet, which allows easy access to meat packages and other items.

Meat Keeper (some models)

The temperature in the Meat Keeper can be made colder than the rest of the refrigerator compartment by using the adjustable air flow control. Foods can be partially frozen and kept fresh longer than if stored on a refrigerator shelf. Before placing food in the Meat Keeper, follow these steps:

1. Carefully handle food items with clean hands and always keep drawer clean.
2. Store meat or fish in the original wrapper. If necessary, overwrap in plastic wrap or foil to prevent drying.
3. If food spoilage occurs, disinfect the drawer with liquid chlorine bleach following label directions. Wash with a solution of baking soda and water. Rinse with water and dry.

Care and Cleaning

Keep your refrigerator and freezer clean to prevent odor build-up. Wipe up any spills immediately and clean both sections at least twice a year. **Never** use metallic scouring pads, brushes, abrasive cleaners or strong alkaline solutions on any surface. **Do not** wash any removable parts in a dishwasher.

Always unplug the power cord from the wall outlet before cleaning. Turning the control to OFF does not disconnect power to the controls, light bulb, or other electrical components.

Inside

CAUTION Damp objects stick to cold metal surfaces. Do not touch refrigerated surfaces with wet or damp hands.

Wash inside surfaces of the refrigerator and freezer with a solution of 2 tablespoons baking soda in 1 quart warm water. Rinse and dry thoroughly. ***Be sure to wring excess water out of sponge or cloth when cleaning around the controls, light bulb, or any electrical parts.***

Wash removable parts such as shelves and drawers with baking soda solution or mild detergent and warm water. **DO NOT USE HARSH CLEANERS ON THESE SURFACES.** Rinse and dry thoroughly. Clean the door gaskets with mild suds, rinse with clear water and wipe dry. Do not use razor blades or other sharp instruments which can scratch the appliance surface when removing adhesive labels. Any glue left from the tape or energy label can be removed with a mixture of warm water and mild detergent, or, touch the residue with the sticky side of tape already removed. **DO NOT REMOVE THE SERIAL PLATE.**

Outside

CAUTION To avoid damage and help the refrigerator run as efficiently as possible, clean the condenser periodically.

Wash the cabinet and handles with warm water and mild liquid detergent. Rinse well and wipe dry with a clean soft cloth.

When moving the refrigerator, pull straight out. Do not shift the refrigerator from side to side as this may tear or gouge the floor covering. If the refrigerator has an automatic ice maker, be careful not to move the refrigerator beyond plumbing connections.

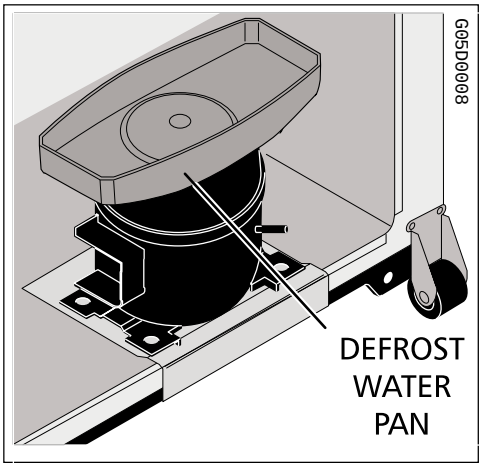

Periodically clean the condenser (black tubes and wires on the back of the refrigerator). Using a vacuum with its dusting tool attachment, vacuum the coils to remove dust build-up. Do not allow lint or dust to accumulate on the coils.

The defrost water pan is located at the bottom rear of the refrigerator on top of the compressor (shown left). The pan should be cleaned periodically. Wipe clean with a damp cloth.

Replacing the Light Bulb

To replace the light bulb:

1. Unplug the refrigerator.
2. Wear gloves as protection against possible broken glass.
3. Replace old bulb with an appliance bulb of the same wattage.
4. Remember to plug the refrigerator back in.

Vacation and Moving Tips

Short vacations: Leave the refrigerator operating during vacations of 3 weeks or less. Use up all perishable items from the refrigerator section. Wrap and store other items in the freezer. If the unit has an automatic ice maker, turn off the ice maker, even if you will be gone just a few days.

Long vacations: Remove all food and ice if you will be gone 1 month or more. Turn the control to OFF and disconnect the power. If the unit has an automatic ice maker, turn off the ice maker and turn the water supply valve to the closed position. Defrost and clean the interior thoroughly. Leave both doors open to prevent odor and mold buildup. Block open if necessary.

Care and Cleaning
(continued)

Moving: When moving the refrigerator, follow these guidelines to prevent damage:

- Remove all food and other items from both the refrigerator and freezer compartments. Empty the ice storage bin. Defrost and clean the interior thoroughly.
- If a hand truck is used in moving, load the refrigerator from the side.
- Turn levelers or rollers (some models) as far up as possible. This will protect them during sliding or moving.
- The cabinet should be well padded and handled with care. **DO NOT DROP.**

Automatic Ice Maker

If your refrigerator has an automatic ice maker, it will provide a continuous supply of ice for normal use. The automatic ice maker is an optional accessory which may be installed in most models at any time. Call your local dealer for installation.

After the plumbing connections have been completed, the water supply valve must be opened. Place the ice container under the ice maker, pushing it as far back as possible. Lower the wire signal arm to its "down" or ON position. Because of new plumbing connections, the first production of ice cubes may be discolored or have an odd flavor. Throw the ice away until the cubes made are free of discoloration and taste. **⚠ CAUTION** Remember, water quality determines your ice quality. It is best to connect ice maker to water that is NOT soft. Softening chemicals can damage ice maker. If ice maker is connected to soft water, ensure softener is maintained, and working properly.

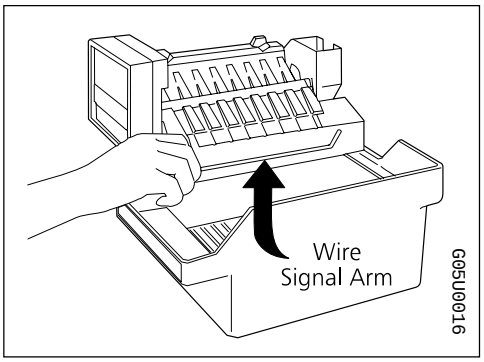

To stop the ice maker, lift the wire signal arm until it clicks and locks in the "up" or OFF position. The ice maker turns off automatically when the ice container is full. If your model has an adjustable freezer shelf, place the shelf so the wire signal arm will hit the ice when the ice container is full.

Ice Maker Tips

1. Ice stored too long may develop an odd flavor. Empty the container and be sure the wire signal arm is in its "down" or ON position. The ice maker will then produce more ice.
2. Occasionally shake the container to keep ice separated.
3. Keep the wire signal arm in its "up" or OFF position until the refrigerator is connected to the water supply or whenever water supply is turned off.
4. **Certain sounds are normal when the ice maker is operating.** They are:
   - Motor operation
   - Ice being loosened from the tray
   - Ice being dropped into the container
   - Running water
   - Water valve opening and closing

   For more information on these operations, see "Normal Operating Sounds."
5. Wash ice container in warm water with mild detergent. Rinse well and dry.
6. Stop the ice maker when cleaning the freezer or for short vacations.
7. If the ice maker will be turned off for a long period of time, turn the water supply valve to the closed position.

Reversible Door Instructions

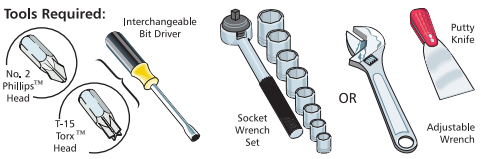

Your refrigerator is equipped with convertible door hinges. Hinging of the door can be changed to the opposite side any time you wish. An envelope containing extra plastic hole plugs is included in some models. Turn the refrigerator control to OFF. Remove all food, bottles, and other items from the door. **Begin with freezer door.** Completely remove one door before beginning the other.

Reversible Door Instructions (Cont.)

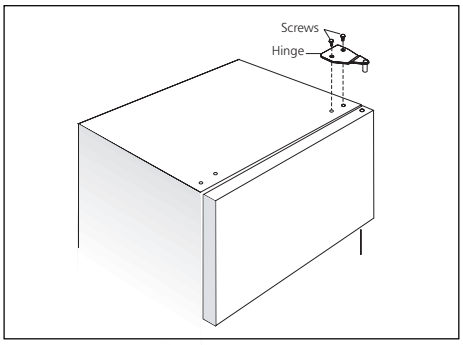

1. Snap off hinge cover at top of cabinet (some models). With the freezer door closed, remove the two screws attaching upper hinge to cabinet. Lift the hinge up and off. **Be sure to save screws and hinge for reassembly later.**

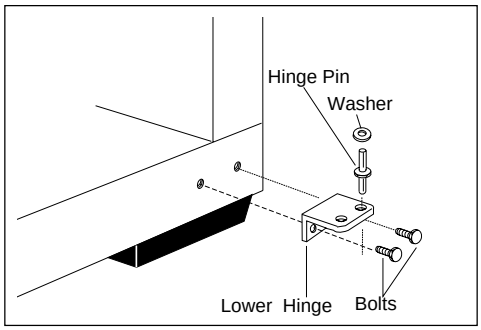

or

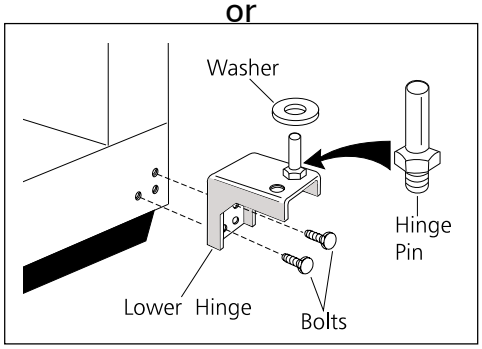

4. Remove hinge pin, hinge, and the two bolts attaching the lower hinge. **Save the hinge, hinge pin, washer (some models) and bolts for reassembly later.**

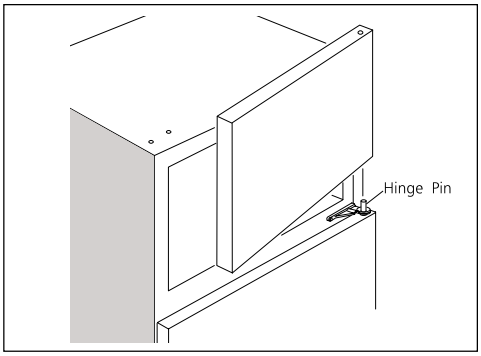

2. Open the freezer door enough to allow it to be lifted off the center hinge.

NOTE: Some models have "pocket" handles, which are handles recessed into the side of the door. On these models, only hinges will need to be reversed. A handle is built into both sides of each door.

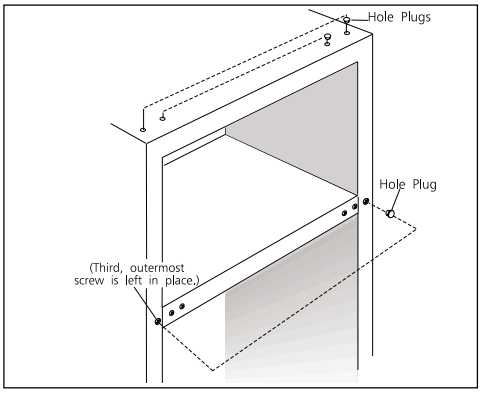

5. Carefully remove the hole plugs from the hinge holes in the center mullion and top of cabinet and reinstall in the opposite set of holes.

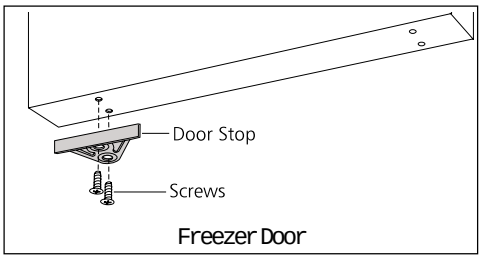

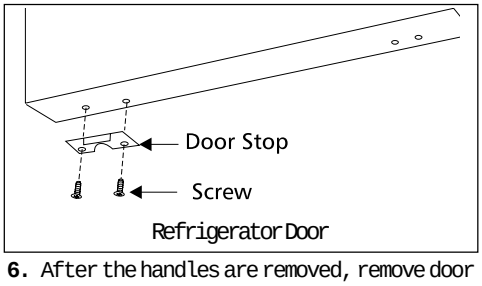

6. After the handles are removed, remove door stop from bottom of freezer and refrigerator door. Reinstall on opposite side.

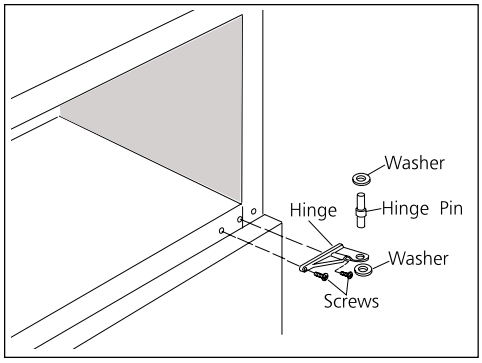

3. With the refrigerator door closed, remove center hinge pin. (Note the arrangement of the upper and lower washers (some models) on the hinge pin. The washers must be assembled later in the same manner.) Open refrigerator door enough to allow door to be lifted off the lower hinge. Remove the two screws attaching the center hinge. The third outermost screw under the center hinge should be left in place. **Save hinge, pin, and washers (some models) for reassembly later.** Reinstall screws in original holes.

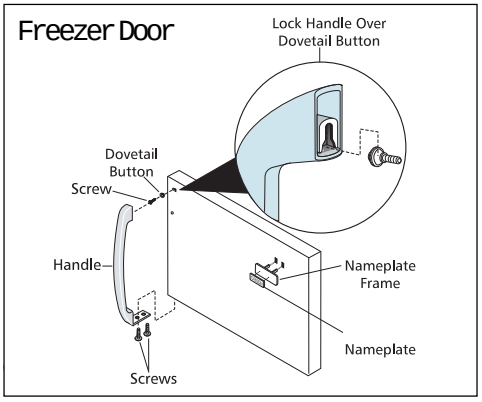

7. Reverse handles while doors are off. Remove the two screws attaching handle to the bottom of the freezer door. Swing bottom of handle away from door, and slide handle straight up and off of dovetail button. Remove screw and dovetail button, and install on other side, using the same holes as the nameplate. To move nameplate to other side, remove nameplate from its frame, turn frame upside down and install in old handle holes. Insert nameplate into frame. Reverse instructions for reattaching handle. Start with handle offset away from door. Place top of handle over dovetail button, swing handle into an upright position and push upward, locking it into place. Secure bottom of handle with screws.

Reversible Door Instructions (Cont.)

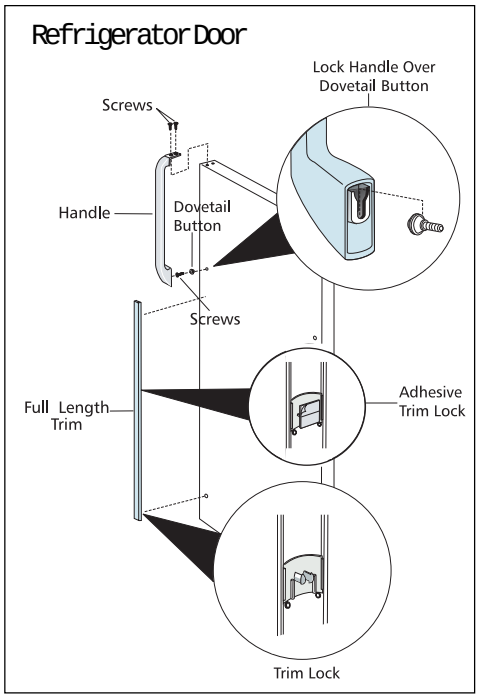

8. To remove handle: Remove the two screws attaching the handle to the top of the refrigerator door. Swing the top of handle away from the door and slide handle down and off of dovetail button. Remove screw and dovetail button and install on other side moving hole plugs from corresponding holes to the opposite side. Reverse instructions for reattaching handle. Start with handle offset away from the door. Place bottom of handle over dovetail button, swing handle into an upright position and push downward, locking it into place. Secure top of handle with screws.

Trim Removal (Full-Length Trim models only) In some models, the refrigerator door has a full length trim piece which continues from the bottom of the handle to the bottom of the door. The top of the trim fits into the base of the handle. An adhesive "trim lock" is positioned about half-way down. The bottom of the trim is held in place by either an adhesive trim lock, or a trim lock with two prongs inserted into a hole on the face of the door. Remove the trim by gently pulling the trim lock areas out and away from the door. When the trim is free from the door, gently pull the trim down and away from the base of the handle.

To reattach trim: Slide both trim locks out of trim. Insert the new adhesive trim locks contained in your literature pack. **NOTE:** Trim lock must be removed and installed by sliding OVER the two donut shaped areas. Install trim to handle by sliding under base of handle. Carefully align trim and press down at trim lock locations. Replace hole plug on opposite side. Use rubbing alcohol to remove any adhesive residue from old trim lock location(s).

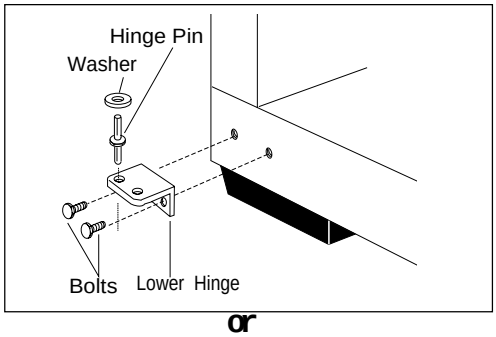

or

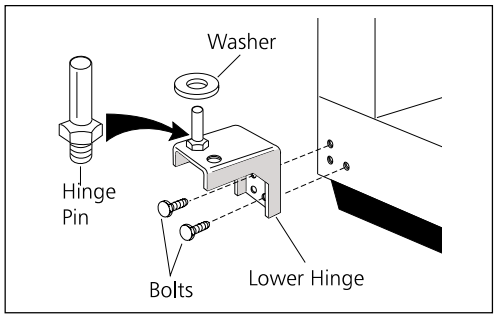

9. Using a putty knife, remove black plastic plug (not shown) from front of base and reinstall in the opposite set of lower hinge holes. Assemble lower hinge to cabinet. Install hinge pin in opposite hinge hole from which it was removed. Install the washer (some models) on the lower hinge pin and insert hinge bolts, but do not tighten. Hinges will have to remain loose against cabinet to align door.

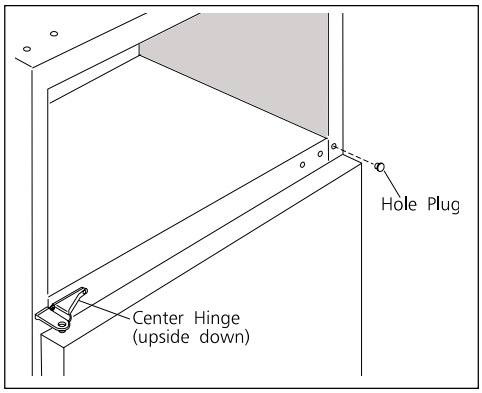

10. Turn center hinge upside down and secure to cabinet as shown, using the screws which are in the new holes. Install refrigerator door on lower hinge pin. Align door with edge of cabinet. Hold the door on front of cabinet.

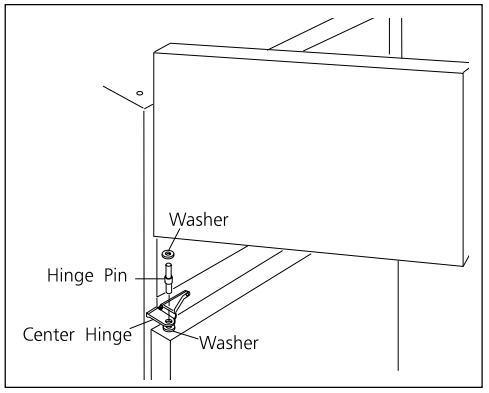

11. Place original washer (some models) over hole in refrigerator door and line up hole in center hinge. Insert hinge pin through both holes. Place washer (some models) on hinge pin, then position freezer door on center hinge.

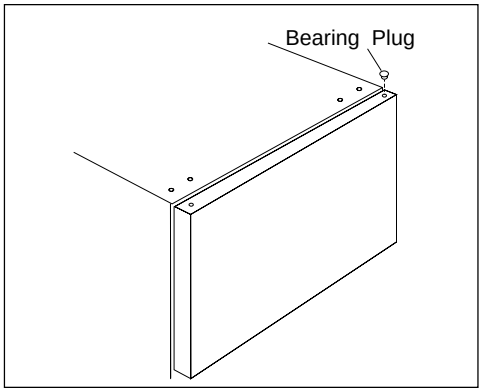

12. Remove plug from upper bearing of door and reinstall on opposite side.

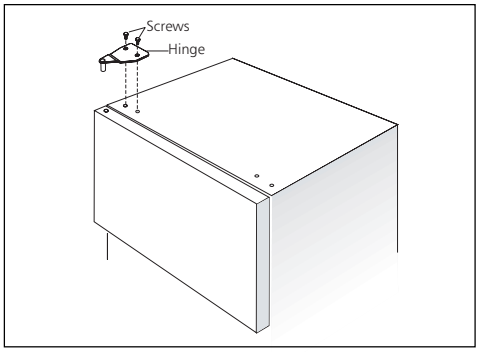

13. Assemble upper hinge to top of cabinet and door. Use opposite set of holes. Do not completely tighten screws. Align doors so there is a parallel gap between doors. Adjust doors to cabinet so gaskets seal, but do not bind. Tighten upper and lower hinge screws. Additional adjustment may be necessary after loading the door shelves. Return food, bottles, and other articles to doors. **Turn the refrigerator control on, and to the previous setting.**

Avoid Service Checklist

Before calling for service, review this list. It may save you both time and expense. This list includes common occurrences that are not the result of defective workmanship or materials in this appliance.

OCCURRENCE	SOLUTION
RUNNING OF REFRIGERATOR	
Refrigerator compressor does not run.	Refrigerator control is off. Set refrigerator control. See **Setting the Controls.**
	Refrigerator is in defrost cycle. This is normal for a fully automatic defrosting refrigerator. The defrost cycle occurs periodically, lasting about 20 minutes.
	Plug at wall outlet is disconnected. Make sure plug is tightly pushed into outlet.
	House fuse has blown or circuit breaker has tripped. Check and/or replace fuse with a 15 amp time-delay fuse. Reset circuit breaker.
	Power outage. Check house lights. Call local electric company.
Refrigerator runs too much or too long.	Room or outside weather is hot. It is normal for the refrigerator to work longer under these conditions.
	Refrigerator has recently been disconnected for a period of time. It takes about 8-12 hours for the refrigerator to cool down completely.
	Automatic ice maker is operating (some models). Operation of the ice maker causes the refrigerator to run slightly more.
	Doors are opened too frequently or too long. Warm air entering the refrigerator causes it to run more. Open the doors less often.
	Refrigerator or freezer door may be slightly open. Make sure refrigerator is level. Keep food and containers from blocking door. See Occurrence section **OPENING/CLOSING OF DOORS/DRAWERS.**
	Refrigerator control (found in refrigerator section) is set too cold. Set the refrigerator control to a warmer setting until the refrigerator temperature is satisfactory. Allow 24 hours for the temperature to stabilize. Then, if the freezer temperature is not right, set the freezer control to a colder setting.
	Refrigerator or freezer gasket is dirty, worn, cracked, or poorly fitted. Clean or change gasket. Leaks in door seal will cause refrigerator to run longer in order to maintain desired temperatures.
Refrigerator compressor goes on and off frequently.	Thermostat is keeping the refrigerator at a constant temperature. This is normal. Refrigerator goes on and off to keep temperature constant.
TEMPERATURES ARE TOO COLD	
Temperature in the freezer is too cold and the refrigerator temperature is satisfactory.	Freezer control is set too cold. Set the freezer control to a warmer setting until the freezer temperature is satisfactory. Allow 24 hours for the temperature to stabilize.
Temperature in the refrigerator is too cold and the freezer temperature is satisfactory.	Refrigerator control is set too cold. Set the refrigerator control to a warmer setting. Allow 24 hours for temperatures to stabilize. Then, if the freezer temperature is not right, set the freezer control to a colder setting.
Food stored in drawers freezes.	Refrigerator control is set too cold. See above solution.
Food stored in Meat Keeper (some models) freezes.	Meat should be stored at a temperature just below the freezing point of water (32°F, 0°C) for maximum fresh storage time. It is normal for ice crystals to form due to the moisture content of meat.
	Adjustable air flow control set too cold. Adjust the adjustable air flow control to a lower setting.
TEMPERATURES ARE TOO WARM	
Temperature in the freezer or refrigerator is too warm.	Doors are opened too frequently or too long. Warm air enters the refrigerator whenever the door is opened. Open the door less often.
	Door is open slightly. See Occurrence section **OPENING/CLOSING OF DOORS/DRAWERS.**
	Condenser is dirty. Clean condenser. See "Outside" in **Care and Cleaning**.

OCCURRENCE	SOLUTION
TEMPERATURES ARE TOO WARM	
Temperature in the freezer is too warm.	Freezer control is set too warm. Set the freezer control to a colder setting until the freezer temperature is satisfactory. Allow 24 hours for the temperature to stabilize.
Temperature in the refrigerator is too warm and the freezer temperature is satisfactory.	Refrigerator control is set too warm. Refrigerator control has some effect on freezer temperature. Set the refrigerator control to a colder setting. Allow 24 hours for the temperature to stabilize. Then, if the freezer temperature is not right, set the freezer control to a warmer setting. Refer to **Setting the Controls.**
Temperature in the Meat Keeper (some models) is too warm.	Adjustable air flow control is set too warm. Adjust the adjustable air flow control to a colder setting.
WATER/MOISTURE/FROST INSIDE REFRIGERATOR	
Moisture collects on inside of refrigerator walls.	Weather is hot and humid which increases rate of frost buildup and internal sweating. This is normal.
	Door is slightly open. See Occurrence section **OPENING/CLOSING OF DOORS/DRAWERS.**
	Door is opened too often or too long. Open the door less often.
Water collects on bottom side of drawer cover.	Vegetables contain and give off moisture. It is not unusual to have moisture on the bottom side of the cover.
Water collects in bottom of drawer.	Washed vegetables and fruits drain while in the drawer. Dry items before putting them into drawer. Water collecting in bottom of drawer is normal.
WATER/MOISTURE/FROST OUTSIDE REFRIGERATOR	
Moisture forms on outside of refrigerator or between doors.	Weather is humid. This is normal in humid weather. When humidity is lower, the moisture should disappear. Set Energy Saver switch to the **Reduce Exterior Moisture** position.
	Door is slightly open, causing cold air from inside the refrigerator to meet warm air from outside. See Occurrence section **OPENING/CLOSING OF DOORS/DRAWERS.**
AUTOMATIC ICE MAKER (some models)	
Ice maker is not making any ice.	Ice maker wire signal arm is in "up" or OFF position. Move wire signal arm to "down" or ON position.
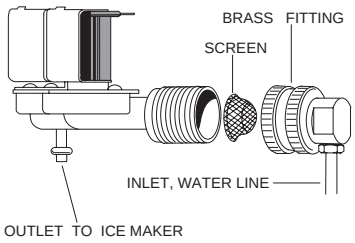	Household water line valve is not open. Turn on household water line valve.
	Water supply valve in refrigerator is being blocked by foreign material. Unplug the refrigerator and turn off water supply. Slide refrigerator out and locate where water is connected to the valve. Unscrew the brass fitting and pull out the screen from inside the valve mesh. Clean the screen of foreign material. Replace screen and brass fitting and turn the water supply on; check for leaks. Plug in refrigerator and slide into place.
	Freezer is not cold enough. See Occurrence section **TEMPERATURES ARE TOO WARM.**
	Saddle valve on cold water pipe is blocked or restricted by foreign material. Turn off household water line valve. Remove, clean or replace valve.
Ice maker is not making enough ice.	Ice maker is producing less ice than you expect. Ice maker should produce approximately 2 1/2 to 4 pounds of ice every 24 hours.
	Freezer is not cold enough. See Occurrence section **TEMPERATURES ARE TOO WARM.**
	Household water line valve is not completely open. Turn on household water line valve.
	Water supply valve in refrigerator is being blocked by foreign material. See Occurrence, **"Ice maker is not making any ice"** above.
Ice maker will not stop making ice.	Ice maker wire arm is being held down by an item in the freezer. Remove item and release arm. Remove any ice cubes which are frozen together over arm.
Ice maker is not separating the cubes.	Ice cubes are not being used frequently enough. Remove and shake ice bucket to separate cubes.
Ice has bad odor and taste.	Ice has picked up odor or flavor from strong food stored in refrigerator or freezer. Cover foods tightly. Discard stale ice. Ice maker will produce fresh supply.
	Water running to ice maker has poor taste or odor. Add filter to ice maker. Consult a water purifying company.

OCCURRENCE	SOLUTION
ODORS IN REFRIGERATOR	
	Interior needs to be cleaned. Clean interior with sponge, warm water and baking soda.
	Food with strong odor is in refrigerator. Cover food tightly.
OPENING/CLOSING OF DOORS/DRAWERS	
Door(s) will not close.	Door is not designed to swing shut automatically. Close door securely.
	Door was closed too hard, causing other door to open slightly. Close both doors gently.
	Refrigerator is not level. It rocks on the floor when it is moved slightly. Be sure floor is level and solid and can adequately support refrigerator. Adjust levelers or rollers (some models) as needed.
	Floor is uneven or weak. Refrigerator rocks on the floor when it is moved slightly. Be sure floor is level and can adequately support refrigerator. Contact carpenter to correct sagging or sloping floor.
	Refrigerator is touching the wall or cabinets. Be sure floor is level and can adequately support refrigerator. Contact carpenter to correct sagging or sloping floor.
Drawers are difficult to move.	Food is touching shelf on top of drawer. Keep less food in drawer.
	Track that drawers slides on is dirty. Clean drawer and track.
LIGHT BULB IS NOT ON	
	Light bulb is burned out. See "Replacing the Light Bulb" in **Care and Cleaning.**
	Light switch is stuck. Light switch is located on the ceiling of the refrigerator compartment near the temperature control box. Push in light switch to release.
	No electric current is reaching refrigerator. See Occurrence section **RUNNING OF REFRIGERATOR.**

Normal Operating Sounds

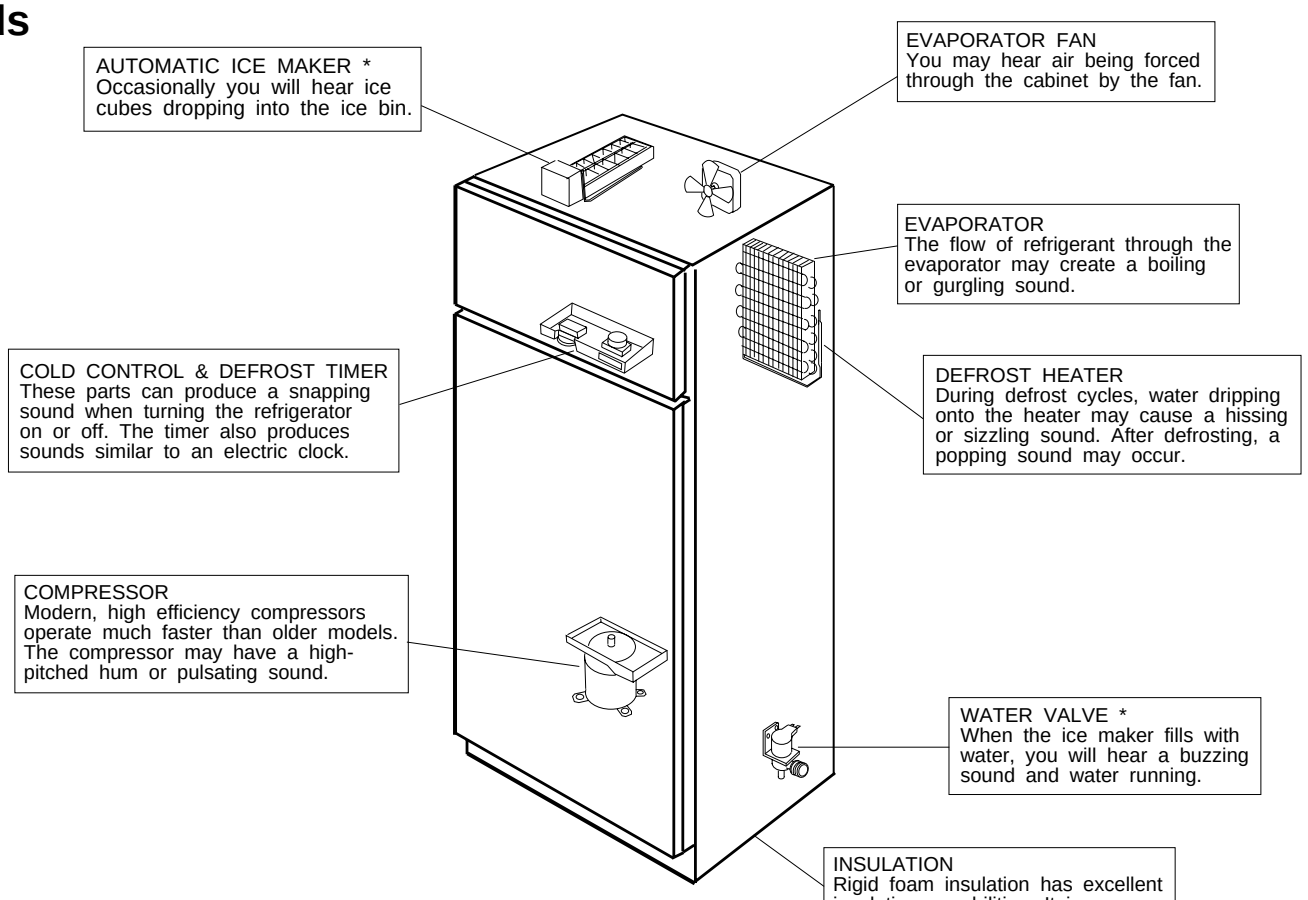

* On models equipped with an Automatic Ice Maker.

REFRIGERATOR WARRANTY

Your product is protected by this warranty

Your appliance is warranted by White Consolidated Industries, Inc. We authorize no person to change or add to any of our obligations under this warranty. WCI has authorized Frigidaire Home Products and its authorized servicers to perform services covered by this warranty. Our obligations for service and parts under this warranty must be performed by Frigidaire or an authorized Frigidaire servicer.

	WARRANTY PERIOD	FRIGIDAIRE, THROUGH ITS AUTHORIZED SERVICERS, WILL:	THE CONSUMER WILL BE RESPONSIBLE FOR:
FULL ONE-YEAR WARRANTY	One year from original purchase date.	Pay all costs for repairing or replacing any parts of this appliance which prove to be defective in materials or workmanship.	Costs of service calls that are listed under **NORMAL RESPONSIBILITIES OF THE CONSUMER.***
LIMITED 2ND - 5TH YEAR WARRANTY (Sealed System)	Second through fifth years from original purchase date.	Repair or replace any parts in the Sealed Refrigeration System (compressor, condenser, evaporator, drier and tubing) which prove to be defective in materials or workmanship.	Travel costs of the technician, diagnostic costs and any removal, transportation and reinstallation costs which are required because of service. Costs for labor, parts and transportation other than with respect to the Sealed Refrigeration System.
LIMITED WARRANTY (Applicable to the State of Alaska)	Time periods listed above.	All of the provisions of the full and limited warranties above and the exclusions listed below apply.	Costs of the technician's travel to the home and any costs for pick up and delivery of the appliance required because of service.

***NORMAL RESPONSIBILITIES OF THE CONSUMER**

This warranty applies only to products in ordinary household use, and the consumer is responsible for the items listed below:

1. Proper use of the appliance in accordance with instructions provided with the product.
2. Proper installation by an authorized servicer in accordance with instructions provided with the appliance and in accordance with all local plumbing, electrical and/or gas codes.
3. Proper connection to a grounded power supply of sufficient voltage, replacement of blown fuses, repair of loose connections or defects in house wiring.
4. Expenses for making the appliance accessible for servicing, such as removal of trim, cupboards, shelves, etc., which are not a part of the appliance when it was shipped from the factory.
5. Damages to finish after installation.
6. Replacement of light bulbs and/or fluorescent tubes (on models with these features).

EXCLUSIONS

This warranty does not cover the following:

1. CONSEQUENTIAL OR INCIDENTAL DAMAGES SUCH AS PROPERTY DAMAGE AND INCIDENTAL EXPENSES RESULTING FROM ANY BREACH OF THIS WRITTEN OR ANY IMPLIED WARRANTY.
   Note: Some states do not allow the exclusion or limitation of incidental or consequential damages, so this limitation or exclusion may not apply to you.
2. Service calls which do not involve malfunction or defects in workmanship or material, or for appliances not in ordinary household use. The consumer shall pay for such service calls.
3. Damages caused by services performed by servicers other than Frigidaire or its authorized servicers; use of parts other than genuine Frigidaire Home Products parts; obtained from persons other than such servicers; or external causes such as abuse, misuse, inadequate power supply or acts of God.
4. Products with original serial numbers that have been removed or altered and cannot be readily determined.

IF YOU NEED SERVICE

Keep your bill of sale, delivery slip, or some other appropriate payment record. The date on the bill establishes the warranty period should service be required. If service is performed, it is in your best interest to obtain and keep all receipts. This written warranty gives you specific legal rights. You may also have other rights that vary from state to state. Service under this warranty must be obtained by contacting Frigidaire Home Products:

800•944•9044
Frigidaire Home Products
P.O. Box 212378
Augusta, GA 30917

FRIGIDAIRE
HOME PRODUCTS

Product features or specifications as described or illustrated are subject to change without notice. All warranties are made by White Consolidated Industries, Inc. This warranty applies only in the 50 states of the U.S.A. and Puerto Rico.

Service Information (Canada)

To avoid unnecessary cost and inconvenience, make a few simple checks before calling for service. Common occurrences and their solutions can be found in the Avoid Service Checklist. Be sure you have followed the instructions in this manual.

If you are unable to locate the cause of a problem, call for service. Insist on factory service by an authorized FRIGIDAIRE PARTS AND SERVICE depot.

FRIGIDAIRE PARTS AND SERVICE
As a Frigidaire Canada brand all these appliances are backed by FRIGIDAIRE PARTS AND SERVICE, one of Canada's largest parts and service networks.

The Frigidaire reputation means you can enjoy complete professional service from one of our hundreds of trained technicians across the country.

FRIGIDAIRE PARTS AND SERVICE
7075 Ordan Drive
Mississauga, Ontario
L5T 1K6

Place the name, address and telephone number of your service depot in the spaces below.

_____

_____

_____

_____

Product and feature specifications as described or illustrated are subject to change without notice.

W A R R A N T Y (CANADA)

REFRIGERATORS (FROST FREE)

WARRANTOR:
Frigidaire Home Products
7075 Ordan Drive
Mississauga, Ontario
L5T 1K6

This refrigerator is a branded product of Frigidaire Canada.

WARRANTY PERIOD:

For two years after purchase by the original consumer/ owner:

For ten years after purchase by the original consumer/ owner:

For service under this warranty, contact your local dealer/retailer, authorized FRIGIDAIRE PARTS AND SERVICE depot, or:

FRIGIDAIRE HOME PRODUCTS
PARTS AND SERVICE
7075 Ordan Drive
Mississauga, Ontario
L5T 1K6
Tel: (905) 565-9200
Fax: (905) 565-0937

WARRANTOR WILL THROUGH ITS AUTHORIZED SERVICE DEPOT:

Pay cost to repair or replace any defective parts (including service and labour charge).

Pay cost (including service and labour charge) to repair or replace defective parts of the sealed refrigeration system consisting of the compressor, evaporator, condenser, interconnecting tubing drier and refrigeration charge.

WARRANTY APPLIES TO:
a) Products purchased and installed in Canada for personal single family household use.
b) Defects resulting or arising out of the manufacturing process.
c) Products bearing legible manufacturer's model and serial numbers.
d) Replacement parts only for the remainder of the original warranty.

WARRANTY DOES NOT APPLY TO:
a) Transportation damage.
b) Supply and replacement of porcelain, fuses, glass and light bulbs.
c) Parts and service supplied or obtained from other than FRIGIDAIRE PARTS AND SERVICE or FRIGIDAIRE PARTS SERVICE authorized depots.
d) Proper installation, control setting and care of finish.

CONSUMER/OWNER RESPONSIBILITY:
a) To provide proof of the original date of purchase by means of a bill of sale or payment.
b) Supply and replacement of porcelain, fuses, glass and light bulbs.
c) To ensure proper power supply and connection of the appliance to same.
d) Proper installation, control setting and care of finish.

This warranty is in addition to any statutory warranties contained in any applicable legislation. The terms and conditions of this warranty are not intended to exclude or limit your rights under those statutes. The warrantor however reserves the right to charge transportation and travelling costs for distances in excess of 48 kilometres (30 miles) from the nearest FRIGIDAIRE PARTS AND SERVICE authorized service depot.

This warranty plus the statutory warranties mentioned are the only warranties given to the consumer/owner for this product.

Notes