

FRIDGE-FREEZER

en Installation instructions and instructions for use

KA..I..

Table of contents

Safety instructions ... **3**
About these instructions ... 3
Risk of explosion ... 3
Risk of electric shock ... 3
Risk of cold burns ... 3
Risk of injury ... 3
Avoiding placing children and vulnerable people at risk ... 4
General requirements ... 4
Damage ... 4
Weight ... 4

Information concerning disposal ... **4**
Disposal of packaging ... 4
Disposal of your old appliance ... 4

Scope of delivery ... **5**

Installing the appliance ... **5**
Transporting ... 5
Removing the appliance doors ... 5
Installation location ... 5
Subsurface ... 5
Observe ambient temperature and ventilation ... 6
Installing the spacers ... 6
Installation dimensions ... 6
Door opening angle ... 6
Fixing the door handle ... 7
Aligning the appliance ... 7
Aligning the doors ... 7

Connecting the appliance ... **8**
Water connection ... 8
Electrical connection ... 9

Getting to know your appliance ... **10**
Control and display panel ... 11

Switching on the appliance ... **12**

Child lock ... **12**
Unlocking the buttons ... 12
Locking the buttons ... 12

Setting the temperature ... **12**
Freezer compartment ... 12
Refrigerator compartment ... 12

Usable capacity ... **12**

Freezer compartment ... **13**
Purchasing frozen food ... 13
Drawers ... 13
Fully utilising the freezer volume ... 13
Freezing capacity ... 13

Freezing fresh food ... **13**
Packing frozen food ... 13
Shelf life of frozen food ... 14
Freezer calendar ... 14

Super freezing ... **14**
Switching on super freezing ... 14
Switching off super freezing ... 14

Thawing froozen food ... **14**

Refrigerator compartment ... **15**
Storing food ... 15
Note the chill zones in the refrigerator compartment ... 15
Fruit and vegetables crisper ... 15

Super cooling ... **15**
Switching on super cooling ... 15
Switching off super cooling ... 15

Ice and water dispenser ... **16**
Dispensing water ... 16
Ice maker ... 16
Dispensing ice ... 16

Variable interior design ... **17**

Alarm ... **17**
Door alarm ... 17

Holiday mode ... **18**
Switching on holiday mode ... 18
Switching off holiday mode ... 18

Energy save mode ... **18**
Switching on energy save mode ... 18
Switching off energy save mode ... 18

Switching off and disconnecting the appliance ... **18**
Switching off the appliance ... 18
Disconnecting the appliance ... 18

Defrosting ... **19**
Freezer compartment ... 19
Refrigerator compartment ... 19

Cleaning the appliance ... **19**
Procedure ... 19
Dispenser ... 19
Interior fittings ... 20
Handling the ice bucket ... 20
Defrosting ... 21

Replacing the water filter ... **22**
Purchasing a new water filter ... 22
Removing the old water filter ... 22
Installing the new water filter ... 22

Light (LED) ... **23**

Tips for saving energy ... **23**

Operating noises ... **23**
Quite normal noises ... 23
Preventing noises ... 23

Eliminating minor faults yourself ... **24**

Customer service ... **25**
Repair order and advice on faults ... 25

Safety instructions

This appliance complies with the relevant safety regulations for electrical appliances and is fitted with noise suppression.

The refrigeration circuit has been checked for leaks.

About these instructions

- Read and follow the Installation instructions and instructions for use. They contain important information on how to install, use and maintain the appliance.
- The manufacturer is not liable if you disregard the instructions and warnings in the Installation instructions and instructions for use.
- Retain all documents for subsequent use or for the next owner.

Risk of explosion

- Never use electric appliances inside the appliance (e.g. heaters or electric ice makers).
- Do not store products which contain flammable propellant (e.g. spray cans) or explosive substances in the appliance.
- Store high-percentage alcohol tightly sealed and in an upright position.
- Do not use additional means to accelerate the defrosting process other than those recommended by the manufacturer.

Risk of electric shock

Improper installations and repairs may put the user at considerable risk.

- When installing the appliance, ensure that the mains cable is not trapped or damaged.
- If the mains cable is damaged: immediately disconnect the appliance from the electricity supply.
- Do not use multiple sockets, extension leads or adapters.
- Have the appliance repaired by the manufacturer, Customer service or a similarly qualified person only.
- Use original parts supplied by the manufacturer only.
  The manufacturer guarantees that these parts satisfy the safety requirements.

Risk of cold burns

- Never put frozen food straight from the freezer compartment into your mouth.
- Avoid prolonged contact of skin with frozen food, ice and the tubes in the freezer compartment.

Risk of injury

Containers which contain carbonated drinks may burst. Do not store containers which contain carbonated drinks in the freezer compartment.



Fire hazard / Danger due to refrigerants

The tubes of the refrigeration circuit convey a small quantity of an environmentally friendly but flammable refrigerant (R600a). It does not damage the ozone layer and does not contribute to the greenhouse effect. If refrigerant escapes, it may injure your eyes or ignite.

- Do not damage the tubes.

If the tubes are damaged:

- Keep naked flames and ignition sources away from the appliance.
- Ventilate the room.
- Switch off the appliance and pull out the mains plug.
- Please contact Customer service.



Fire hazard

Portable multiple outlets or power supplies may overheat, causing a fire.

Never leave portable multiple outlets or portable power supplies behind the appliance.

Avoiding placing children and vulnerable people at risk

At risk are:

- Children,
- People who have limited physical, mental or sensory abilities,
- People who have inadequate knowledge concerning safe operation of the appliance.

Measures:

- Ensure that children and vulnerable people have understood the hazards.
- Children or vulnerable people must be supervised by a responsible person when using the appliance.
- Only children from 8 years and above may use the appliance.
- Supervise children while the appliance is being cleaned or maintained.
- Never allow children to play with the appliance.

Risk of suffocation

- Keep children away from the packaging and its parts.

General requirements

- This appliance is intended for use in the home and the home environment.
- This appliance is intended for use up to a maximum height of 2000 metres above sea level.

Damage

To prevent damage:

- Do not stand or support yourself on the base, runners or doors.
- Keep plastic parts and door seals free of oil and grease.
- Pull the mains plug – not the power cord.

Weight

The appliance is very heavy. The appliance should always be transported and set up by at least 2 persons.

Information concerning disposal

Disposal of packaging

The packaging protects your appliance from damage during transit. All utilised materials are environmentally safe and recyclable. Please help us by disposing of the packaging in an environmentally friendly manner.

Please ask your dealer or inquire at your local authority about current means of disposal.

Disposal of your old appliance

Old appliances are not worthless rubbish! Valuable raw materials can be reclaimed by recycling old appliances.



This appliance is labelled in accordance with European Directive 2012/19/EU concerning used electrical and electronic appliances (waste electrical and electronic equipment – WEEE). The guideline determines the framework for the return and recycling of used appliances as applicable throughout the EU.

Warning

Redundant appliances

1. Pull out the mains plug.
2. Cut off the power cord and discard with the mains plug.
3. Do not take out the trays and receptacles: children are therefore prevented from climbing in!
4. Do not allow children to play with the appliance once it has spent its useful life. Danger of suffocation!

Refrigerators contain refrigerant and gases in the insulation. Refrigerant and gases must be disposed of professionally. Ensure that tubing of the refrigerant circuit is not damaged prior to proper disposal.

Scope of delivery

After unpacking all parts, check for any damage in transit. If you have any complaints, please contact the dealer from whom you purchased the appliance or our Customer service.

The delivery consists of the following parts:

- Free-standing appliance
- Bag containing installation materials
- Water filter package
- Interior fittings (depending on model)
- Operating instructions
- Customer service booklet
- Warranty enclosure
- Information on the energy consumption and noises

Installing the appliance

Transporting

The appliance is heavy. Secure in position during transportation and installation.

Due to the weight/dimensions of the appliance and to minimise the risk of injury and damage to the appliance at least two persons are necessary to set-up the appliance safely.

Removing the appliance doors

If the appliance will not fit through the house door, the appliance doors can be unscrewed.

Caution!

Only Customer service may unscrew the appliance doors.

Installation location

Install the appliance in a dry, well ventilated room. The installation location should neither be exposed to direct sunlight nor near a heat source, e.g. a cooker, radiator, etc. If installation next to a heat source is unavoidable, use a suitable insulating plate or observe the following minimum distances to a heat source:

- 3 cm to electric or gas cookers.
- 30 cm to an oil or coal-fired cooker.

If installing the appliance next to another refrigerator or freezer, ensure a minimum lateral distance of 25 mm to prevent the formation of condensation.

If a panel or cupboard is installed above the appliance, ensure that a gap of 30 mm is left so that the appliance can be pulled out of the recess if required.

The air heated on the rear side of the appliance must be allowed to escape unhindered.

Subsurface

Caution!

The appliance is very heavy.

The floor of the installation location must not give way; if required, reinforce floor.

To ensure that the doors can open all the way, observe lateral minimum distances when installing the appliance in a corner or recess
(⟶ *chapter “Installation dimensions”*).

If the depth of the adjacent kitchen equipment is more than 60 cm, observe lateral minimum distances in order to utilise the full door opening angle
(⟶ *chapter “Door opening angle”*).

Observe ambient temperature and ventilation

Ambient temperature

The climate class can be found on the rating plate. The climate class indicates within which ambient temperatures the appliance can be operated. The rating plate is located in the refrigerator compartment at the right side.

Climate class	Permitted ambient temperature
SN	+10 °C to 32 °C
N	+16 °C to 32 °C
ST	+16 °C to 38 °C
T	+16 °C to 43 °C

Note:

The appliance is fully functional within the room temperature limits of the indicated climatic class. If an appliance of climatic class SN is operated at colder room temperatures, the appliance will not be damaged up to a temperature of +5 °C.

Ventilation

Never cover the ventilation openings on the rear of the appliance. Conduction of the heated air must not be obstructed. Otherwise, the refrigeration unit will have to work harder. This increases power consumption.

Installing the spacers

Remove the two screws using a screwdriver. Take the spacers out of the bag. Secure the spacers to the rear of the appliance using the screws. This ensures that there is a minimum distance between the appliance and the wall.

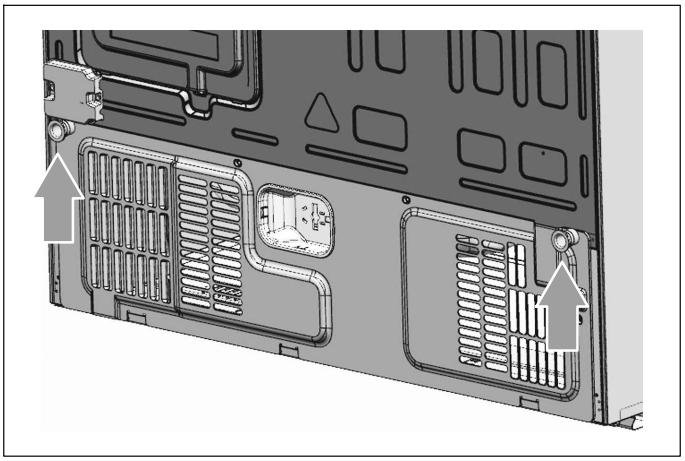

Installation dimensions

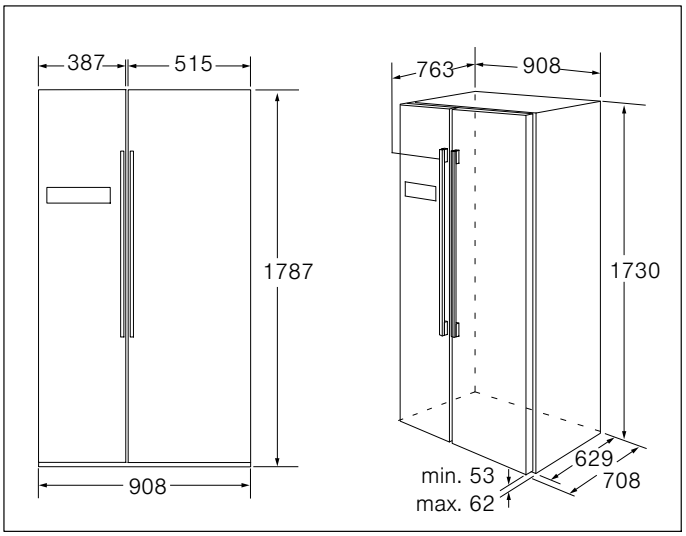

Door opening angle

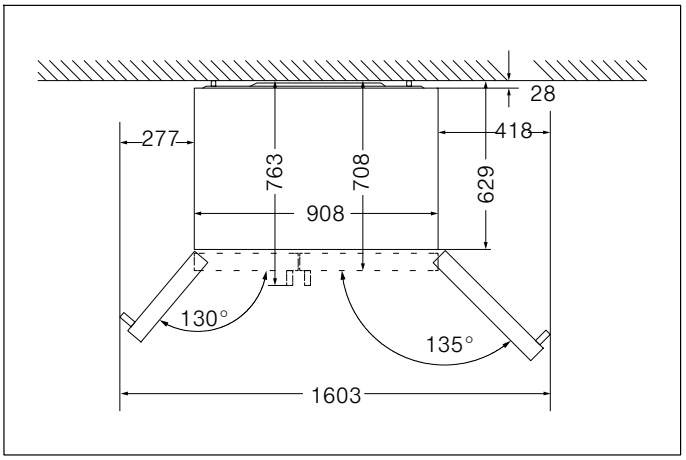

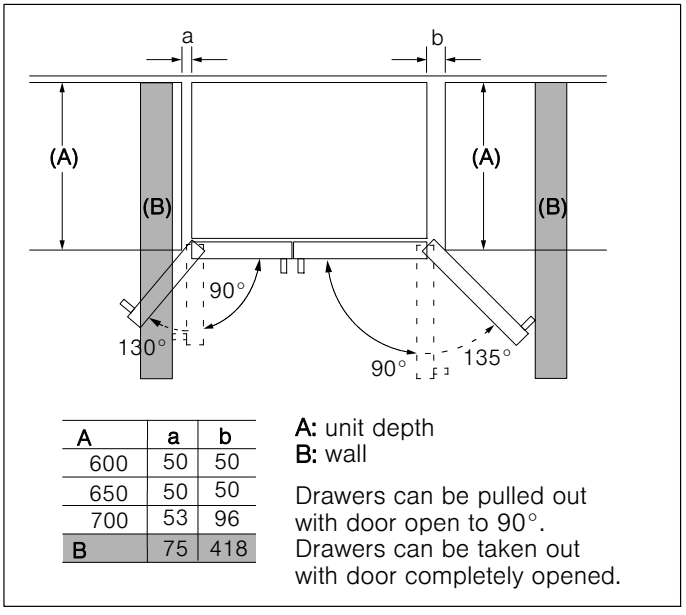

A	a	b
600	50	50
650	50	50
700	53	96
B	75	418

A: unit depth
B: wall

Drawers can be pulled out with door open to 90°. Drawers can be taken out with door completely opened.

Fixing the door handle

Before you use the product, please check the handles of the appliance. If a handle is loose, you should fix it with the hexangular screwdriver in the clockwise direction, then it can be used normally.

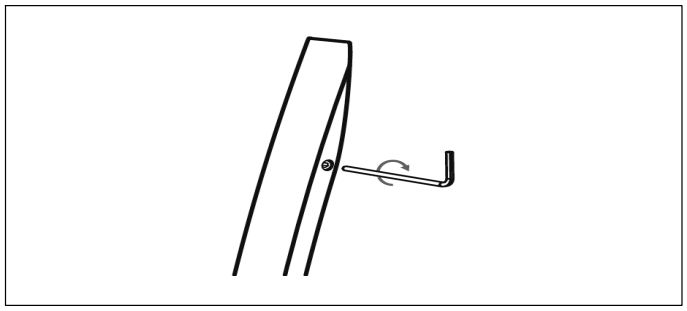

Aligning the appliance

To ensure that the appliance functions correctly, it must be set level with a spirit level.

- For sufficient leveling and air circulating in the lower rear section of the appliance, the bottom feet may need to be adjusted.
- To allow the doors to self-close, tilt back the top backwards at about 15 mm or 0.5° by turning the adjustable feet.
- Whenever you want to move the appliance, remember to turn the feet back up, so that the appliance can roll freely.
- The rollers, which are not castors, should be only used for forward or backward movement. Moving the refrigerator sideways may damage your floor and the rollers.
- Reinstall the appliance when relocating.

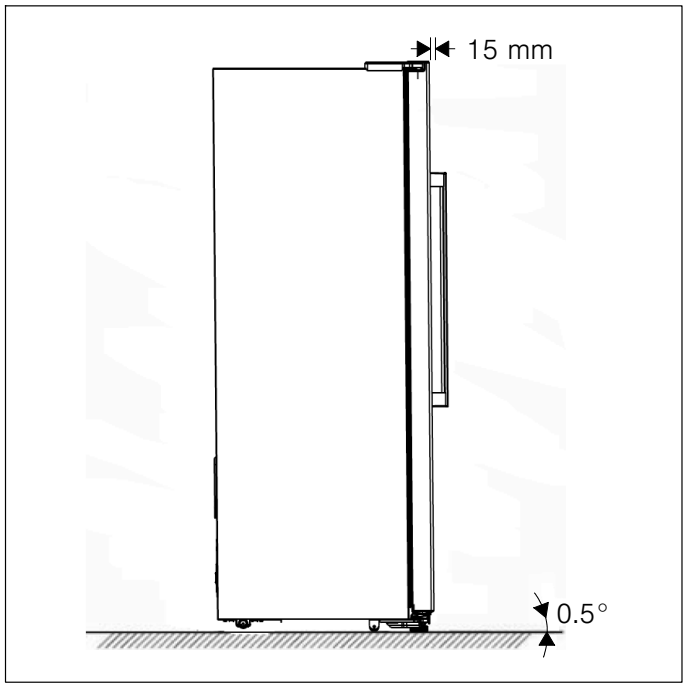

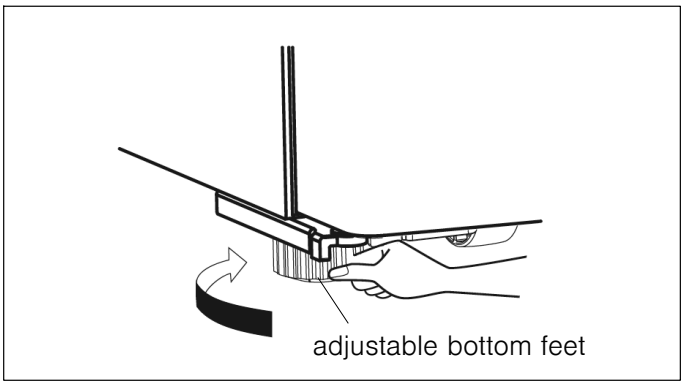

Aligning the doors

When you found the doors are not at the same level, you can use a spanner to adjust the fridge door.

Only the fridge door can be adjusted.

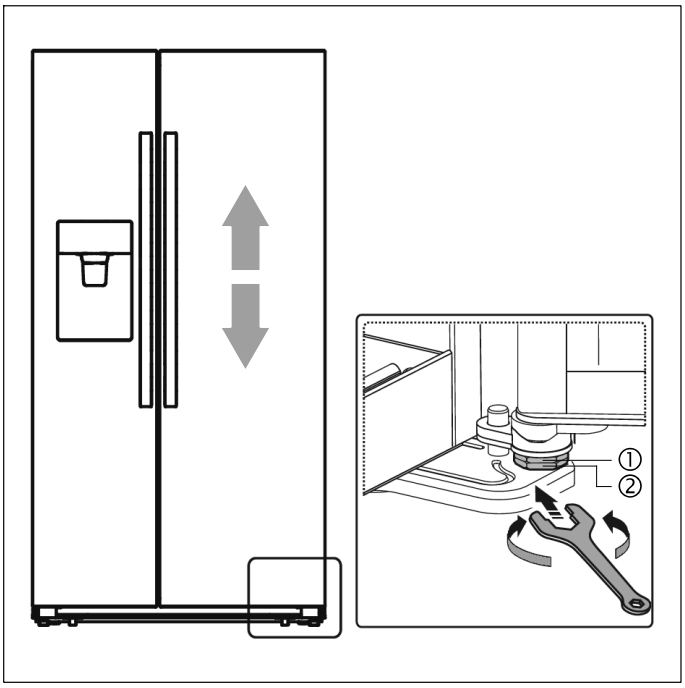

To raise the fridge door, turn the bolt (1) anticlockwise.

To lower the fridge door, turn the bolt (1) clockwise.

Once in position, lock the nut (2).

Connecting the appliance

Have a technician install and connect the appliance according to the enclosed installation instructions.

Do not remove the transportation protection devices from the shelves and storage compartments until the appliance has been installed.

Always connect the water before the power.

Apart from statutory national regulations, you should stick to the connection terms relating to the local electricity company.

After installing the appliance, wait at least 1 hour until the appliance starts up. During transportation the oil in the compressor may have flowed into the refrigeration system.

Before switching on the appliance for the first time, clean the interior of the appliance (⟶ *chapter "Cleaning the appliance"*).

Water connection

Connect the appliance to a domestic water supply. The appliance may only be connected to a cold-water line.

- Minimum pressure: 2 bar
- Maximum pressure: 8 bar

Contact a plumbing company if you are unsure how to check the existing water pressure.

Installing the water filter

When appliance is delivered, the water filter package is located in a door rack of the refrigerator compartment.

1. Take the water filter out of the packaging. The instructions in the packaging include information for the water filter. Please keep them for future use.

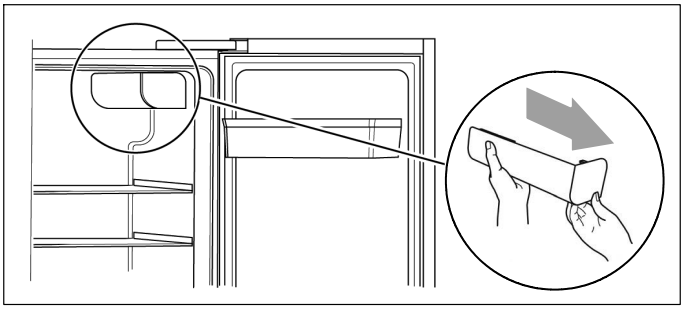

2. Open the refrigerator door to its maximum angle and remove the water filter cap by pulling it out slowly.

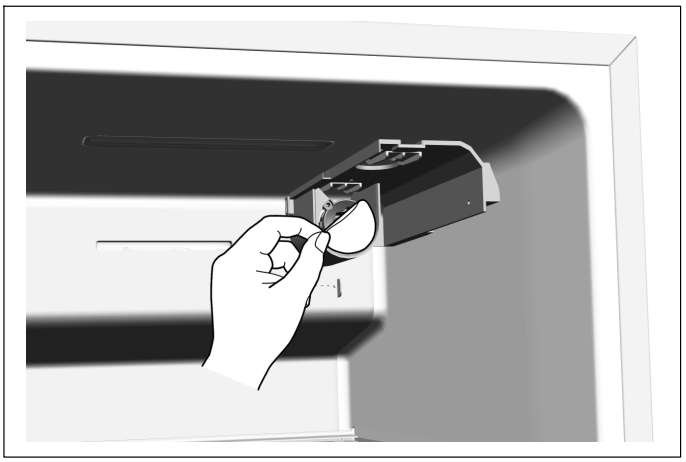

3. Remove the protector of the water filter base.

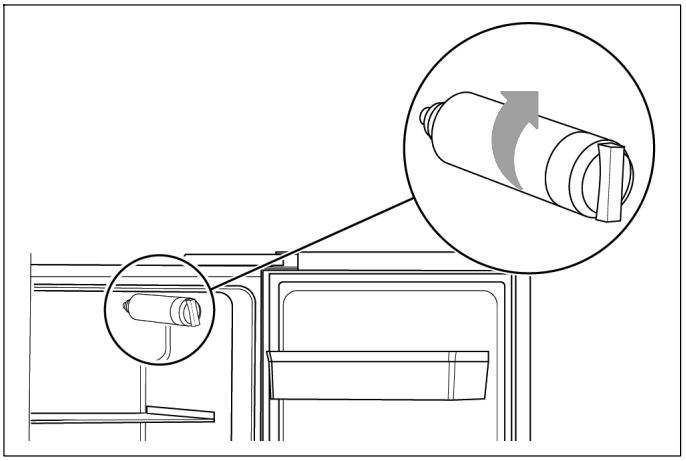

4. Screw in the water filter in clockwise direction and make sure it is firmly fitted to the water filter base.

⚠ Warning

If not installed correctly, this can result in the appliance is not working properly, or result in water leakages.

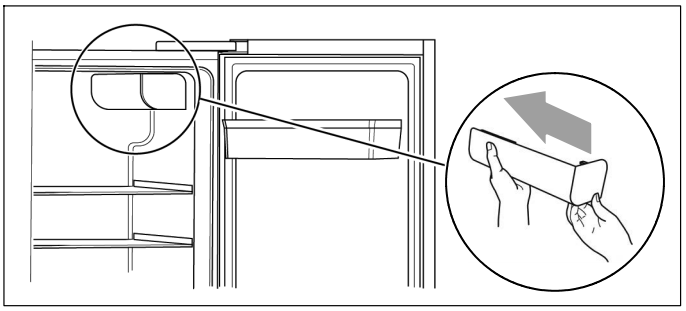

5. Reattach the filter cover by gently sliding it on.

Installing the water hose

Use the supplied connection hose for installation.

1. Unpack the bag containing installation materials and take out the two pads.

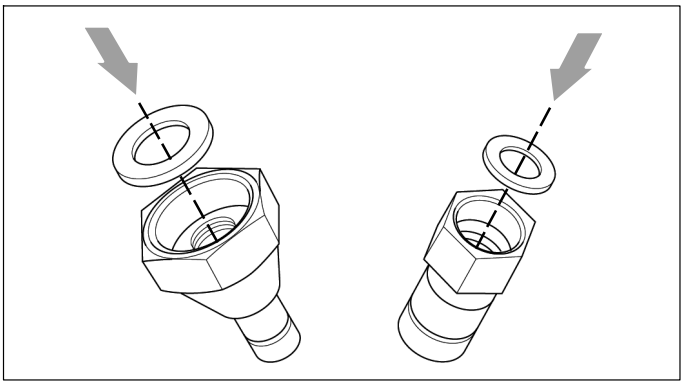

2. Install the two pads to the hose nuts.

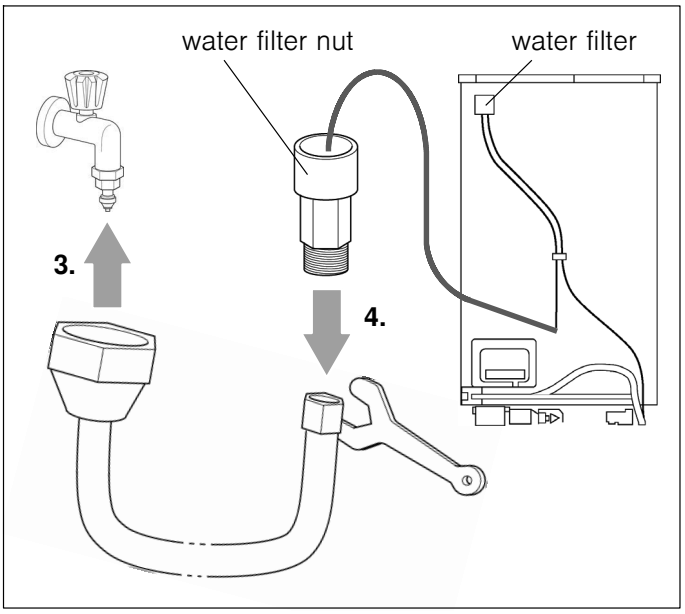

3. Manually connect the hose nut to the tap.
4. Use the spanner to connect the other hose nut to the water filter nut.

Checking the water connection for leaks

⚠ Warning – Risk of leaks and water damage!

- After turning on the water valve, make sure that there is no leakage at all connection points of the water lines. If there is a leakage, turn off the valve immediately and tighten the water connector.
- The water lines should not be pressed by heavy things and should not bend too much.
- Place the water hose in loops or coils so that the appliance can be moved away from the wall.

Note: After connection, please flush the lines with several cups of water before use. Dispense water according to the instructions for use. This will last several seconds as there is still air in the lines and the water tank.

Electrical connection

⚠ Warning – Risk of electric shock!

If the length of the mains cable is inadequate, never use multiple sockets or extension leads. Instead, please contact Customer service for alternatives.

The appliance must be connected to a permanently installed socket.

The socket must be near the appliance and also freely accessible following installation of the appliance.

The appliance complies with protection class I. Connect the appliance to 220-240 V / 50 Hz alternating current via a correctly installed socket with protective conductor. The socket must be protected by a 10 A to 16 A fuse or higher.

For appliances operated in non-European countries, check whether the indicated voltage and current type match the values of your electricity supply. The rating plate is situated in the bottom right-hand side of the appliance. The mains cable may be replaced by a technician only.

⚠ Warning

Never connect the appliance to electronic energy saver plugs.

Our appliances can be used with mains and sine-controlled inverters. Mains-controlled inverters are used for photovoltaic systems which are connected directly to the national grid. Sine-controlled inverters must be used for isolated applications (e.g. on ships or in mountain lodges) which are not connected directly to the national grid.

Getting to know your appliance

Note:

Due to unceasing modification of our products your appliance may be slightly different from this Instruction manual but its functions and using methods remain the same.

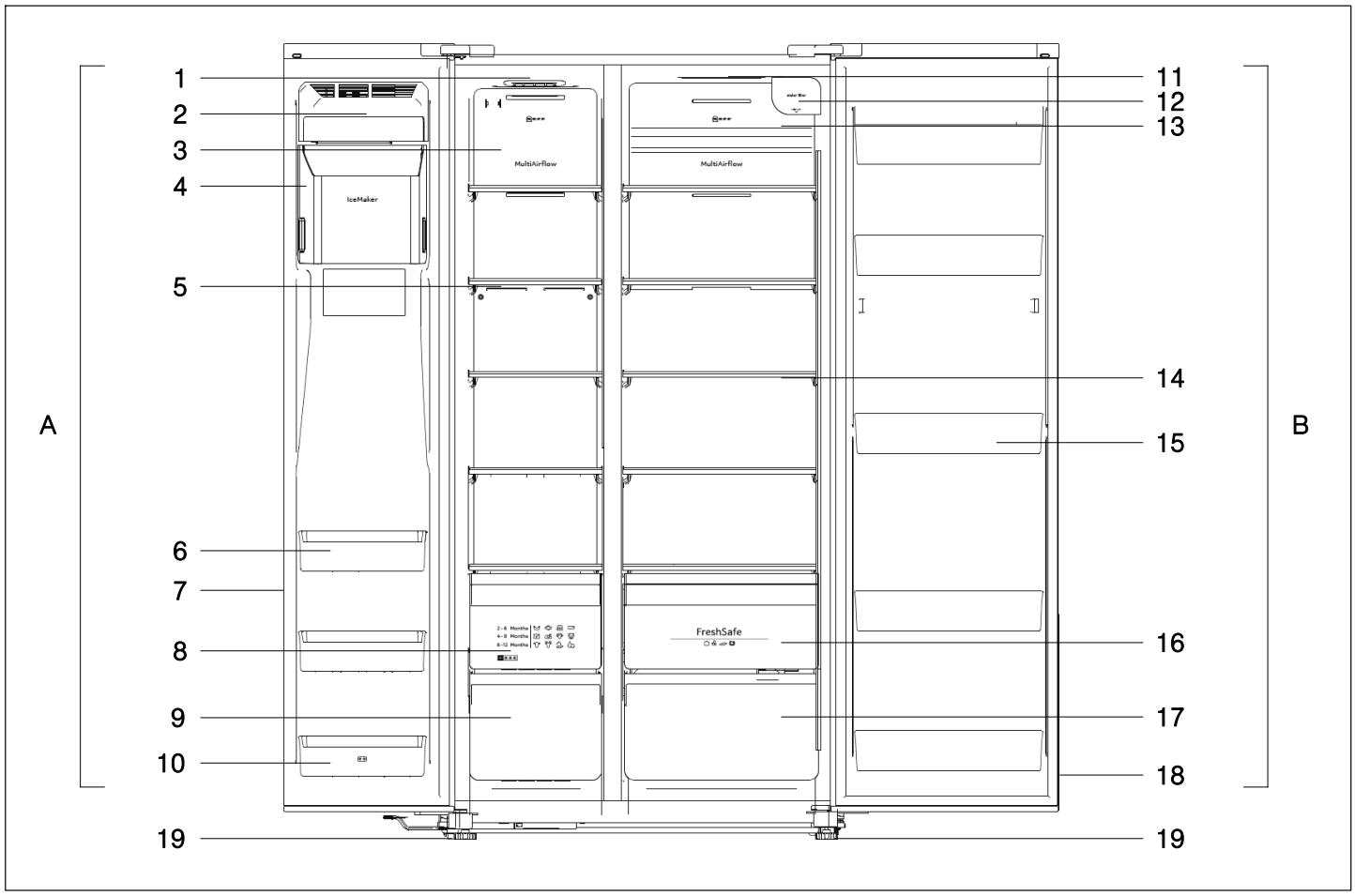

A Freezer compartment

1 Freezer LED Light
2 Ice-maker front cover assembly
3 Wind channel cover in freezer
4 Ice bucket assembly
5 Freezer shelf
6 Freezer door rack
7 Freezer door gasket
8 Freezer upper drawer
9 Freezer lower drawer
10 Freezer door rack (two-star zone)

B Refrigerator compartment

11 Fridge LED light
12 Water filter (behind cap)
13 Wind channel cover in fridge
14 Fridge shelf
15 Fridge door rack
16 Fruit and vegetables crisper
17 Fridge lower drawer
18 Fridge door gasket

19 Adjustable feet

Control and display panel

The control and display panel on the door consists of 2 display areas showing temperatures, displays for different modes and 9 control buttons.

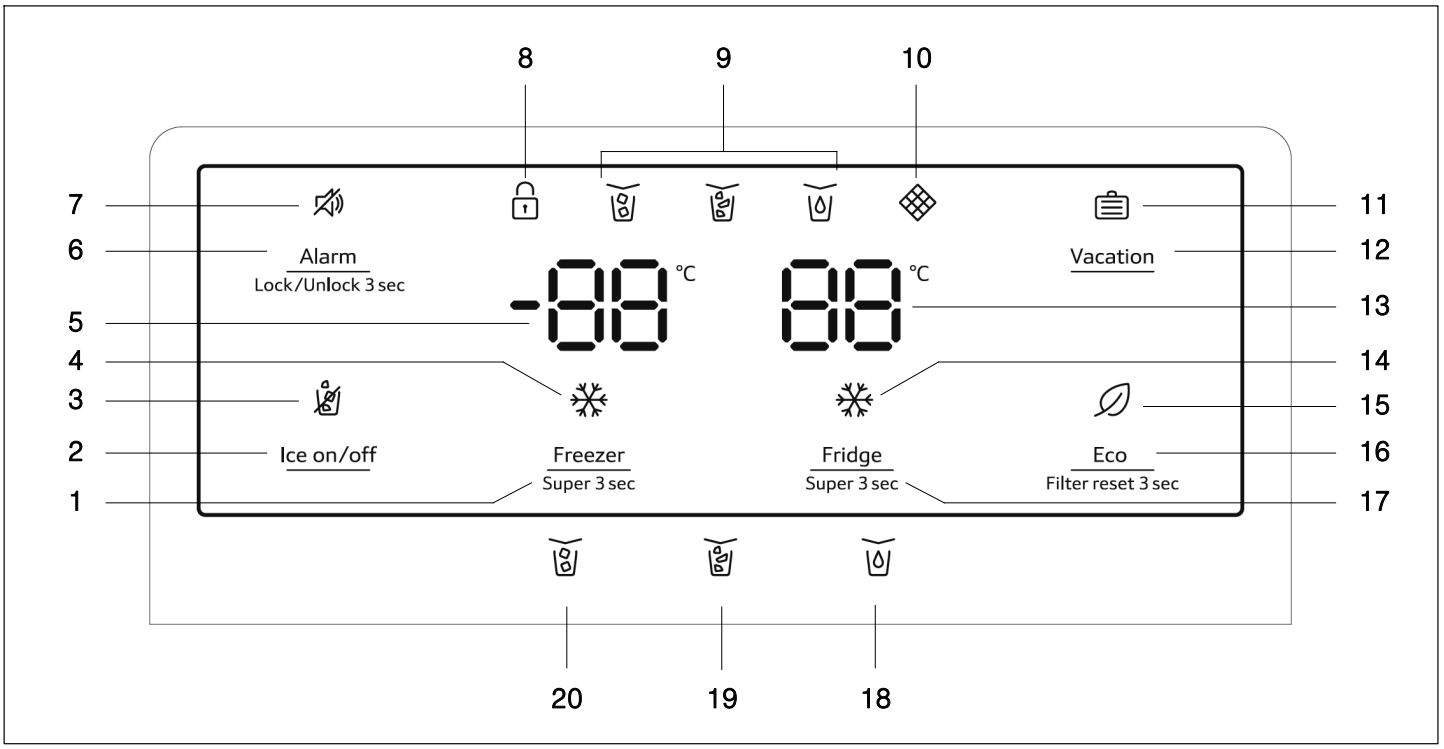

1 Button “Freezer / Super 3 sec”
To change temperature of freezer.

2 Button “Ice on/off”
To turn ice maker on or off.

3 Display (ice off)
Illuminated, when ice maker is turned off.

4 Display (super freeze)
Illuminated, when “super freezing” function is active.

5 Freezer compartment temperature display

6 Button “Alarm / Lock/Unlock 3 sec”
To clear a present door alarm.
To lock or unlock the control panel and the dispenser function (child lock).

7 Display (alarm)
Illuminated in case of door alarm.

8 Display (child lock)
Illuminated, when child lock is active.

9 Display of dispenser mode:
“cubed ice” mode active.
“crushed ice” mode active.
“water” mode active.

10 Display (water filter)
When display is blinking, you need to replace the water filter
(⟶ *chapter “Replacing the water filter”*).

11 Display (vacation)
Illuminated, when “holiday” mode is active.

12 Button “Vacation”
To activate or deactivate “holiday” mode.

13 Fridge compartment temperature display

14 Display (super cool)
Illuminated, when “super cooling” function is active.

15 Display (eco)
Illuminated, when “energy save” mode is active.

16 Button “Eco / Filter reset 3 sec”
To turn energy save mode on or off.
To reset the water filter display, after having replaced the water filter.

17 Button “Fridge / Super 3 sec”
To change temperature of refrigerator.

18 Button
To activate dispenser mode “water”.

19 Button
To activate dispenser mode “crushed ice”.

20 Button
To activate dispenser mode “cubed ice”.

Switching on the appliance

When the appliance is powered on, the backlighting of the displays on the control panel starts working. All displays will light up for 3 seconds and a buzzer sounds. If no buttons have been pressed and the doors are closed, the backlighting will turn off after 60 seconds.

The preset temperatures are reached after several hours. Do not put any food in the appliance beforehand.

The factory has recommended the following temperatures:

- Freezer compartment: -18 °C
- Refrigerator compartment: +4 °C

Note:

Childlock is off when appliance is powered on.

Child lock

If the display 🔒 is illuminated, all the buttons are locked and the dispenser function is deactivated.

Unlocking the buttons

Press the “Alarm / Lock/Unlock 3 sec” button for 3 seconds to unlock the buttons and to activate the dispenser function. Display 🔒 goes out.

Locking the buttons

Press the “Alarm / Lock/Unlock 3 sec” button for 3 seconds to lock all the buttons and deactivate the dispenser function. Display 🔒 will be illuminated.

Setting the temperature

Freezer compartment

The freezer compartment can be set from -14 °C to -24 °C. We recommend a setting of -18 °C.

After unlocked, the freezer temperature setting is activated. Press “Freezer / Super 3 sec” button to set freezer temperature between -14 °C and -24 °C as needed.
The control panel will display the corresponding value according to the following sequence.

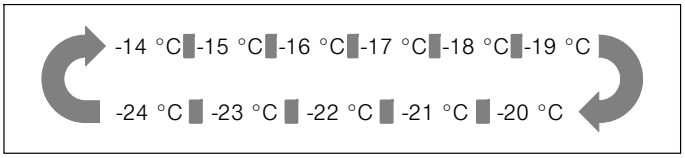

Refrigerator compartment

The refrigerator compartment can be set from +2 °C to +8 °C. We recommend a setting of +4 °C.

Perishable food should not be stored above +4 °C.

After unlocked, the fridge temperature setting is activated. Press “Fridge / Super 3 sec” button to set fridge temperature between 8 °C and 2 °C as needed. The control panel will display the corresponding value according to the following sequence.

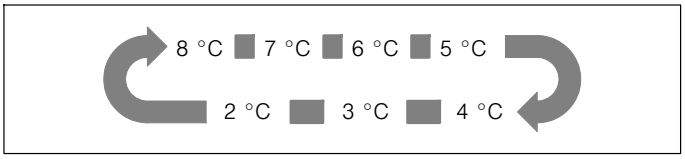

Usable capacity

Information on the usable capacity can be found inside your appliance on the rating plate
(⟶ *chapter “Customer service”*).

Freezer compartment

Use the freezer compartment

- to store deep-frozen food,
- to make ice cubes,
- to freeze food.

Caution!

Ensure that bottles are not left in the freezer for longer than needed as freezing may cause the bottle to break.

Note:

Ensure that the freezer compartment door has been closed properly. If the door is open, the frozen food will thaw. The freezer compartment will become covered in thick ice. Also: waste of energy due to high power consumption!

When the freezer compartment door is closed, a low pressure occurs, causing a sucking noise. Wait two to three minutes until the low pressure has adjusted itself.

Purchasing frozen food

- Packaging must not be damaged.
- Use by the “use by” date.
- Temperature in the supermarket freezer must be -18 °C or lower.
- If possible, transport deep-frozen food in an insulated bag and place quickly in the freezer compartment.

Drawers

The drawers, mounted on telescopic extension slides, can be used to store large quantities of frozen food.

When you remove the drawer pull it forwards and lift off the sliders. Remember to remove all food first.

Once you have removed the drawer, ensure the slides are pushed back fully.

Fully utilising the freezer volume

If you don't need ice, you can switch off the ice maker and replace the ice bucket by the door rack (⟶ *chapter “Cleaning the appliance”*).

Freezing capacity

Information about the freezing capacity can be found on the rating plate.

Freezing fresh food

Freeze fresh and undamaged food only.

To retain the best possible nutritional value, flavour and colour, vegetables should be blanched before freezing. Aubergines, peppers, zucchini and asparagus do not require blanching.

Literature on freezing and blanching can be found in bookshops.

Note:

Keep food which is to be frozen away from food which is already frozen.

- The following foods are suitable for freezing: Cakes and pastries, fish and seafood, meat, game, poultry, vegetables, fruit, herbs, eggs without shells, dairy products such as cheese, butter and quark, ready meals and leftovers such as soups, stews, cooked meat and fish, potato dishes, soufflés and desserts.
- The following foods are not suitable for freezing: Types of vegetables, which are usually consumed raw, such as lettuce or radishes, eggs in shells, grapes, whole apples, pears and peaches, hard-boiled eggs, yoghurt, soured milk, sour cream, crème fraîche and mayonnaise.

Packing frozen food

To prevent food from losing its flavour or drying out, place in airtight containers.

1. Place food in packaging.
2. Remove air.
3. Seal the wrapping.
4. Label packaging with contents and date of freezing.

Suitable packaging:

Cling wrap, tubular film made of polyethylene, aluminium foil, freezer containers.

These products are available from specialist outlets.

Unsuitable packaging:

Wrapping paper, greaseproof paper, cellophane, bin liners and used shopping bags.

Items suitable for sealing packaged food:

Rubber bands, plastic clips, string, cold-resistant adhesive tape, etc.

Bags and tubular film made of polyethylene (PE) can be sealed with a film heat sealer.

Shelf life of frozen food

Storage duration depends on the type of food.

At a temperature of -18 °C:

- Fish, sausage, ready meals and cakes and pastries: up to 6 months
- Cheese, poultry and meat: up to 8 months
- Vegetables and fruit: up to 12 months

Freezer calendar

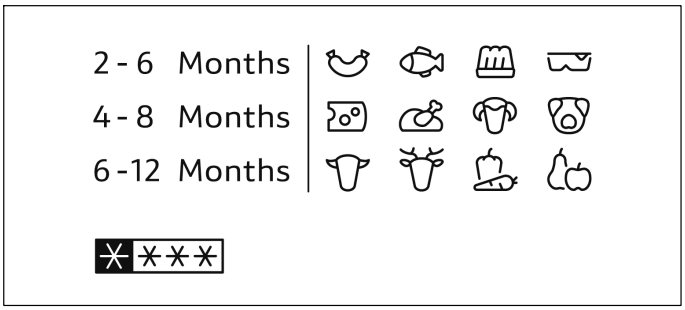

To prevent the quality of the frozen food from deteriorating, do not exceed the storage duration. The storage period depends on the type of produce. The figures next to the symbols indicate the permitted storage period of the produce in months.

In case of commercialy available frozen food observe the date of manufacture or use-by date.

Super freezing

Food should be frozen solid as quickly as possible in order to retain vitamins, nutritional value, appearance and flavour.

The appliance runs constantly when super freezing has been switched on. The freezer compartment temperatures are much lower than in normal operation.

Several hours before placing fresh food in the freezer compartment, switch on super freezing to prevent an unwanted temperature rise.

If the freezing capacity according to the rating plate is to be used, switch on super freezing 24 hours before the fresh products are placed in the freezer compartment.

Smaller quantities of food (up to 2 kg) can be frozen without super freezing.

Switching on super freezing

Press the “Freezer / Super 3 sec” button for 3 seconds to switch on “super freezing”.

Display ❄ (super freeze) goes on and the freezer compartment temperature display shows “-24 °C”.

Switching off super freezing

To switch off “super freezing”, press the “Freezer / Super 3 sec” button.

If super freezing is switched off, display ❄ (super freeze) goes out. The appliance automatically switches to the temperature set prior to super freezing mode.

Notes

- Super freezing automatically switches off after 52 hours.
- Activation of “energy save” or “holiday” mode will switch off super freezing.

Thawing froozen food

Depending on the type and application, select one of the following options:

- at room temperature
- in the refrigerator
- in an electric oven, with/without fan assisted hot-air
- in the microwave

Caution!

Do not refreeze thawing or thawed food. Only ready meals (boiled or fried) may be refrozen.

No longer store the frozen produce for the max. storage period.

Refrigerator compartment

The refrigerator compartment is the ideal storage location for meat, sausage, fish, dairy products, eggs, ready meals and pastries.

Storing food

- Store fresh, undamaged food. The quality and freshness will then be retained for longer.
- In the case of ready-made products and bottled goods, observe the best-before date or use-by date specified by the manufacturer.
- To retain aroma, colour and freshness, pack or cover food well before placing in the appliance. This will prevent the transfer of flavours and the discolouration of plastic parts in the refrigerator compartment.
- Allow warm food and drinks to cool down before placing in the appliance.

Note:

Avoid contact between food and rear panel. Otherwise the air circulation will be impaired.

Food or packaging could freeze to the rear panel.

Note the chill zones in the refrigerator compartment

The air circulation in the refrigerator compartment creates different chill zones:

- Coldest zone is between the vegetable container and the glass shelf situated above.

  Note:
  Store perishable food (e.g. fish, sausage, meat) in the coldest zone above the vegetable container.
- Warmest zone is at the very top of the door.

  Note:
  Store e.g. hard cheese and butter in the warmest zone. Cheese can then continue to release its flavour and the butter will still be easy to spread.

Fruit and vegetables crisper

The crisper, mounted on telescopic extension slides, is for storing vegetables and fruit.

When you remove the crisper pull it forwards and lift off the sliders. Remember to remove all food first.

Once you have removed the crisper, ensure the slides are pushed back fully.

Notes

- Fruit sensitive to cold (e.g. pineapple, banana, papaya and citrus fruit) and vegetables sensitive to cold (e.g. aubergines, cucumbers, zucchini, peppers, tomatoes and potatoes) should be stored outside the refrigerator at temperatures of approx. +8 °C to +12 °C for optimum preservation of quality and flavour.
- Condensation may form in the vegetable container depending on the type and quantity of products stored. Remove condensation with a dry cloth.

Super cooling

Super cooling sets the refrigerator temperature to the coldest temperature setting.

Switch on super cooling mode, e.g.

- before placing large quantities of food in the refrigerator compartment.
- for the fast cooling of drinks.

Switching on super cooling

Press the “Fridge / Super 3 sec” button for 3 seconds to switch on “super cooling”.

Display ❄ (super cool) goes on and the refrigerator compartment temperature display shows “2 °C”.

Switching off super cooling

To switch off “super cooling”, press the “Fridge / Super 3 sec” button.

If super cooling is switched off, display ❄ (super cool) goes out. The appliance automatically switches to the temperature set prior to super cooling mode.

Notes

- Super cooling automatically switches off after 3 hours.
- Activation of “energy save” or “holiday” mode will switch off super cooling.

Ice and water dispenser

The following can be dispensed as required:

- cooled water
- cubed ice
- crushed ice

You can choose the type of ice or water by touching the (cubed ice), (crushed ice) or (water) button.

⚠ Warning

- Do not use fragile receptacles for dispensing water or ice – risk of injury from broken glass!
- Keep fingers clear of the discharge opening. Risk of injury from crusher blades!

Note:

The ice and water dispenser will not function when the freezer door is open or child lock is active.

Dispensing water

The water from the dispenser is cooled to a palatable temperature. If you would like the water colder, place ice cubes in the glass before dispensing the water.

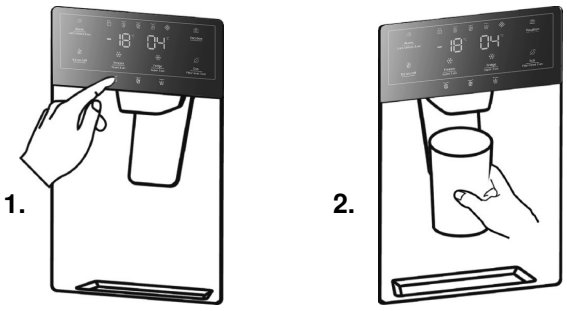

1. Press button to activate dispenser mode “water”. Display will illuminate, when “water” mode is active.
2. Press the glass against the dispenser lever.
   The water stops running when the glass is removed from the lever.
   Do not immediately remove your glass from under the dispenser after dispensing water. Wait for 2 or 3 seconds to prevent spills.

Note:

If no water is dispensed or it is dispensed slowly, the water filter may be clogged and may need to be replaced
(⟶ *chapter “Replacing the water filter”*).

Ice maker

When the freezer compartment has reached its freezing temperature, water flows into the ice maker and freezes into ice cubes. When the ice cubes are ready, they are automatically discharged into the ice bucket.

Turning off the ice maker

The ice maker can be turned off to save water and energy, if no ice is needed.

Press the “Ice on/off” button to turn on or off the ice maker. Display (ice off) is illuminated, when the ice maker is turned off.

Note: “Ice on/off” only concerns the ice maker, not the dispenser.

Emptying the ice bucket

If you do not dispense ice for a long period, ice may clump in the ice bucket. If this occurs, please remove and empty the bucket
(⟶ *chapter “Cleaning the appliance”*).

Dispensing ice

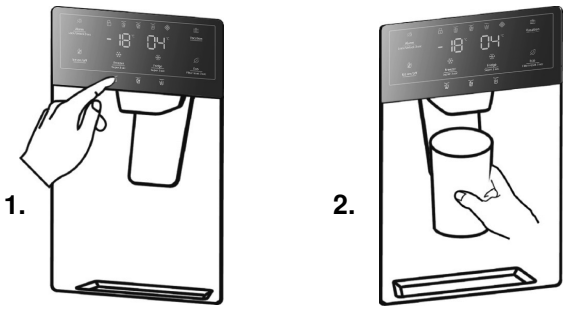

1. Press button or to activate dispenser mode “cubed ice” or “crushed ice”.
   Corresponding display or will illuminate, when selected mode is active.
2. Press a suitable receptacle against the dispenser lever.
   Remove the receptacle from the dispenser lever when it is approx. half full. Ice in the discharge may cause the receptacle to overflow or block the discharge.
   Do not immediately remove your glass from under the dispenser after dispensing ice. Wait for 2 or 3 seconds to prevent spills.

Notes

- After switching over from dispensing cubed ice to crushed ice, the dispenser may still contain whole ice cubes or pieces of ice cube. These will be dispensed with the first portions of crushed ice.
- After switching over from dispensing crushed ice to cubed ice, a small amount of crushed ice may be dispensed with the first portions of cubed ice.
- Do not dispense ice continualy more than one minute during normal use to avoid excessive temperature on the ice crusher motor.

Variable interior design

The refrigerator compartment is provided with 5 glass shelves and several different door racks, which are suitable for the storage of eggs, canned liquid, bottled drinks and packed food. They can be placed at different heights according to your needs.
Before removing the door racks please remove all food items to avoid spillage.

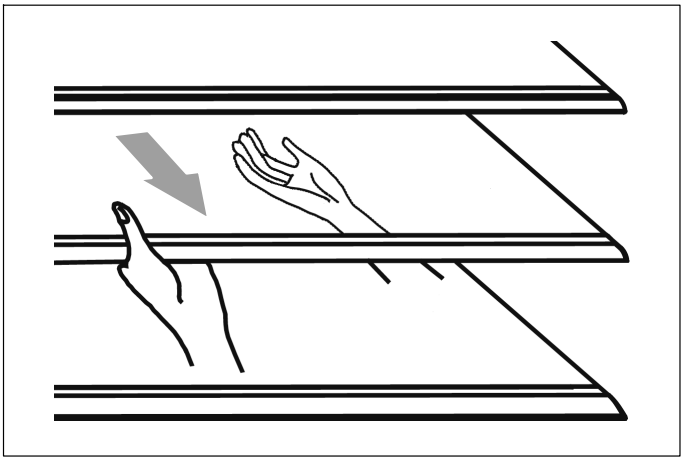

- When you remove the shelves, gently pull them forward until the shelf comes clear of the shelf guides.
- When you return the shelves, make sure there is no obstacle behind and gently push the shelf back into the position.

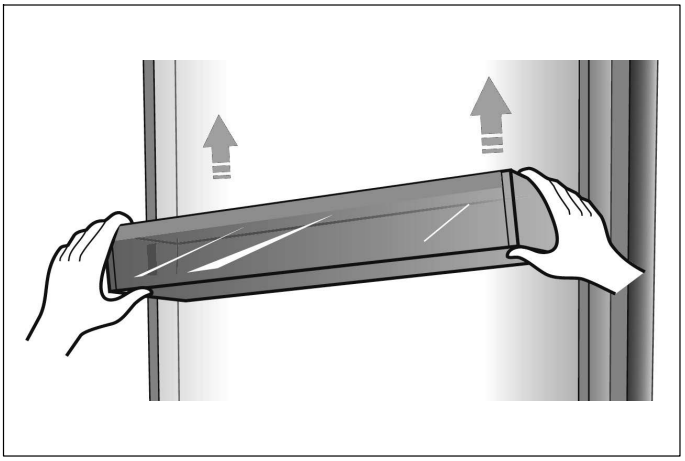

- Lift the door racks and remove.

The bottle rack (option) is for storing bottled wine and drinks.

Note: Please use gently when you remove the bottles.

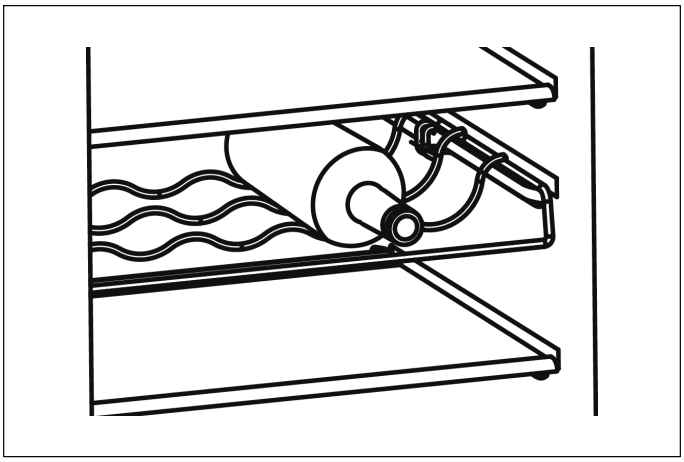

- The shelf can be taken out to be cleaned or to save the shelf space.

Alarm

In case of alarm, display 🔊 will be on and there will be a buzzing sound.

Note: When buzzer sounds three times and water filter display is blinking, the water filter needs to be replaced (⟶ *chapter "Replacing the water filter"*).

Door alarm

If the door of the fridge or freezer is open for longer than 2 minutes, the door alarm switches on.

In case of door alarm, the buzzer will sound 3 times every 1 minute and will automatically stop alarming 10 minutes later.

To save energy, please avoid keeping the door open for a long time when using the appliance.

The door alarm can be cleared by closing the door.

With open door, the alarm can be cleared by pressing the "Alarm / Lock/Unlock 3 sec" button when child lock is not active.

Holiday mode

If you are going away for a long period of time, “holiday” mode will be your best choice. It switches the temperature of the refrigerator compartment to 15 °C and the temperature of the freezer compartment to -18 °C to minimize the energy consumption.

Important: Do not store any food in the fridge during this time.

Note: It is also recommended to close the water supply during the absence.

Switching on holiday mode

Press the “Vacation” button to switch on holiday mode.

Display 🧳 (vacation) goes on and the refrigerator compartment temperature display shows “15 °C”.

Note: When the holiday mode is on, the ice maker will automatically turn off.

Switching off holiday mode

To switch off “holiday mode”, press the “Vacation” button.

If holiday mode is switched off, display 🧳 (vacation) goes out. The temperature setting will revert back to it's previous setting.

Energy save mode

Energy save mode may help you to reduce the energy consumption. It sets the temperature of the refrigerator compartment to 6 °C and the temperature of the freezer compartment to -17 °C.

Switching on energy save mode

Press the “Eco / Filter reset 3 sec” button to switch on the energy save mode.

Display 🍃 (eco) goes on, when energy save mode is active.

Switching off energy save mode

To switch off energy save mode, press the “Eco / Filter reset 3 sec” button.

If energy save mode is switched off, display 🍃 (eco) goes out. The temperature setting will revert back to it's previous setting.

Switching off and disconnecting the appliance

Switching off the appliance

Pull out mains plug or switch off fuse.

Refrigerating unit switches off.

Caution!

If the appliance is powered off too long, the ice in the bucket will melt and the water will flow out of the appliance to the floor. To avoid this, you should empty the ice bucket
(⟶ *chapter “Cleaning the appliance”*).

Note: Child lock, super freeze and super cool will not be retained, when appliance is switched off.

Disconnecting the appliance

If you do not use the appliance for a prolonged period:

1. Take all food out of the appliance.
2. Cut off the water supply.
3. Run off the remaining drinking water.
4. Pull out the mains plug.
5. Remove the water filter.

   Note:
   Before recommissioning the appliance, install a new water filter.
6. Clean the appliance interior and empty the ice bucket
   (⟶ *chapter “Cleaning the appliance”*).
7. Leave the appliance doors open to prevent odours from forming.

Defrosting

Freezer compartment

The fully automatic NoFrost system ensures that the freezer compartment remains free of ice. Defrosting is no longer required.

Refrigerator compartment

Defrosting is actuated automatically.

The condensation runs through the drainage hole into an evaporation pan on the rear of the appliance.

Cleaning the appliance

⚠ Warning

Never clean the appliance with a steam cleaner!

Caution!

- Do not use abrasive, chloride or acidic cleaning agents or solvents.
- Do not use scouring or abrasive sponges. The metallic surfaces could corrode.
- Don't use sharp objects to remove frost from the refrigerator.
- Never clean shelves and containers in the dishwasher. The parts may become deformed!
- Customer Service must clean inaccessible points. Cleaning by customer service can give rise to costs.

Procedure

1. Pull out the mains plug or switch off the fuse.
2. Take out the frozen food and store in a cool location.
3. Wait until the layer of frost has thawed.
4. Clean the appliance with a soft cloth, lukewarm water and a little pH-neutral washing-up liquid. The rinsing water must not run into the light.
5. Wipe the door seal with clear water only and then wipe dry thoroughly.
6. After cleaning reconnect the appliance. Interior should be completely dry before connecting the mains plug and switching on.
7. Put the frozen food back into the appliance.

Dispenser

- Do not pull the dispenser lever out as this could damage or break the lever's spring.

Cleaning water collecting tray and strainer

Spilled water collects in the water collecting tray.

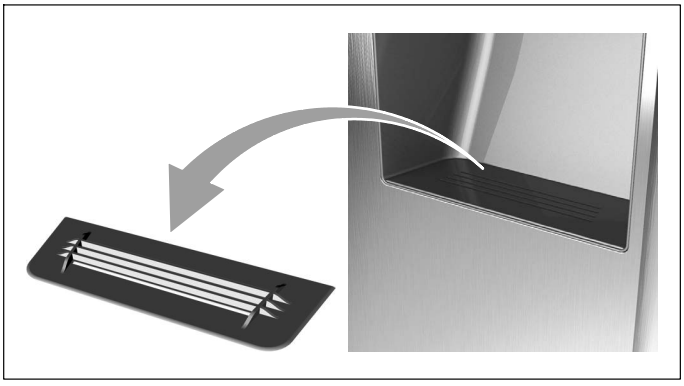

- To clean the water collecting tray and the strainer, the strainer can be taken out.

Interior fittings

To clean the equipment, all variable parts of the appliance can be taken out
(⟶ *chapter “Variable interior design”*).

Note:

To take out and clean the containers, open the doors fully beyond 90°.

Removing container

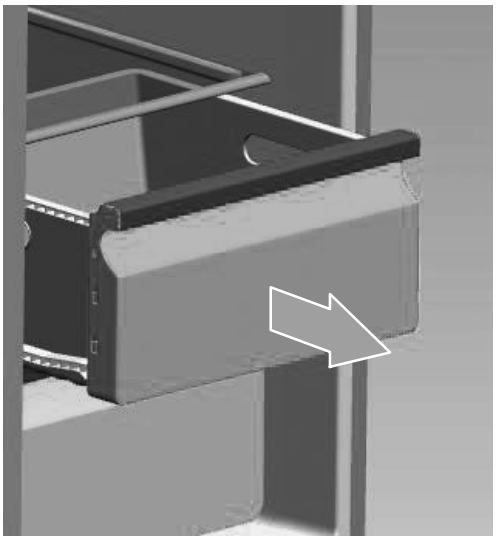

- Pull out container all the way, lift to detach it from the holder and take out.

To insert the drawer, place on the telescopic rails and push into the appliance. Attach the drawer by pressing it down.

Handling the ice bucket

Removing the ice bucket

For cleaning purposes or if you don't need ice, the ice bucket can be removed.

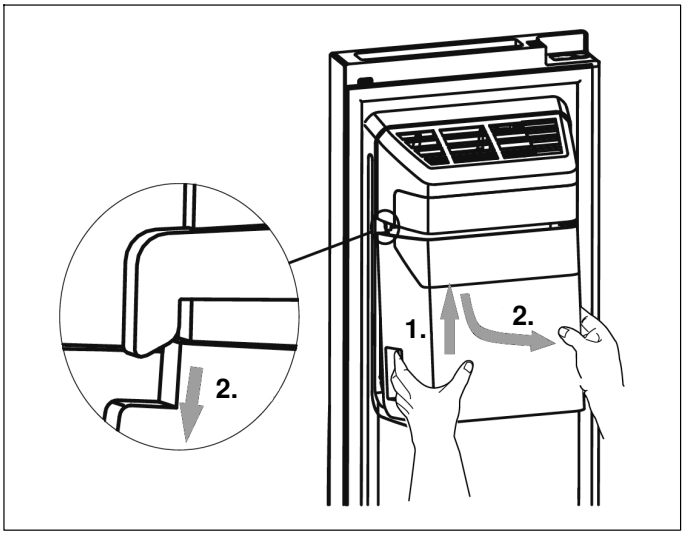

1. Hold at the handle and lift up the ice bucket.
2. Pull out the ice bucket slowly to prevent damage.

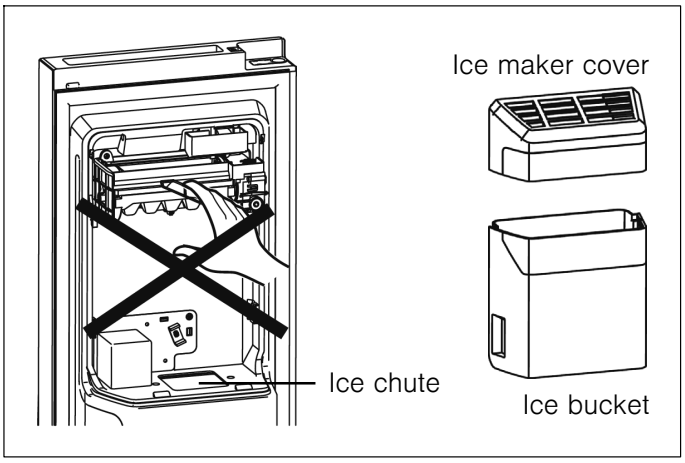

⚠ Warning

Do not put your fingers, hands or any unsuitable objects in the ice chute or ice maker. This can cause personal injury or material damage.

Note: There is a water line connection to the ice maker. Do not disassemble the whole water supply system by yourself. It is recommended to be done by qualified persons only.

Emptying and cleaning the ice bucket

The ice bucket may need to be emptied, if the ice cubes stick together or if ice cubes have not been dispensed for a prolonged period or when the appliance is powered off.

To clean the ice bucket, wash with a mild detergent, rinse well and dry thoroughly. Do not use harsh or abrasive cleaners or solvents.

Replacing the ice bucket

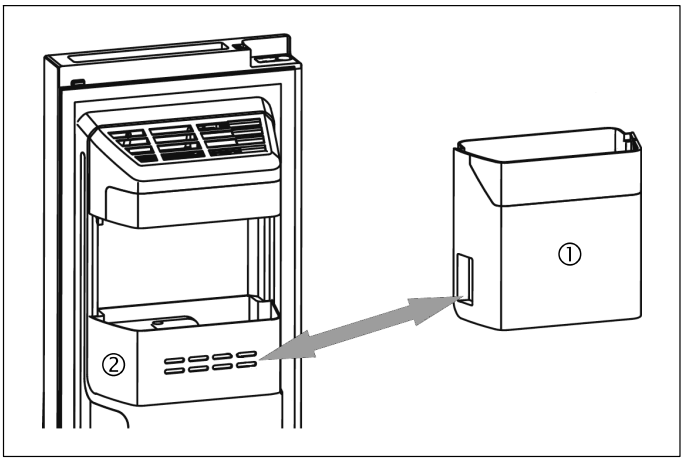

If you don't need ice, you can switch off the ice maker and replace the ice bucket (1) by the door rack (2) to increase your freezer volume.

Refitting the ice bucket

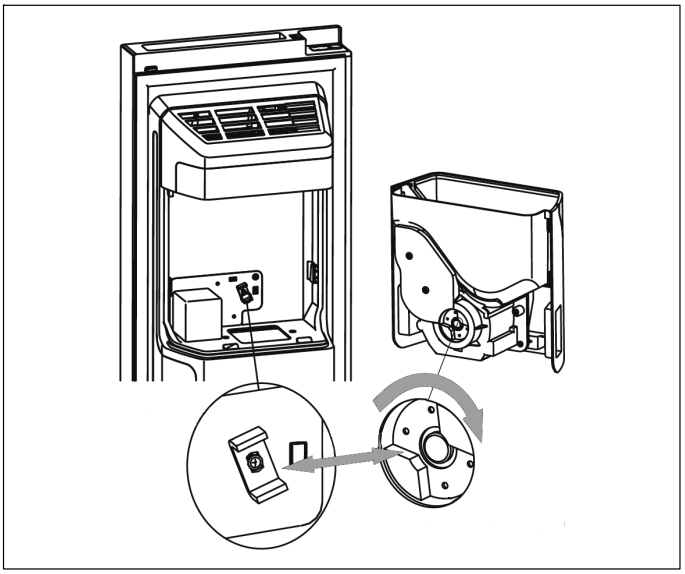

1. Check that the two couplers are at a suitable angle to connect correctly. If necessary, turn the coupler of the ice bucket to match the motor coupler.

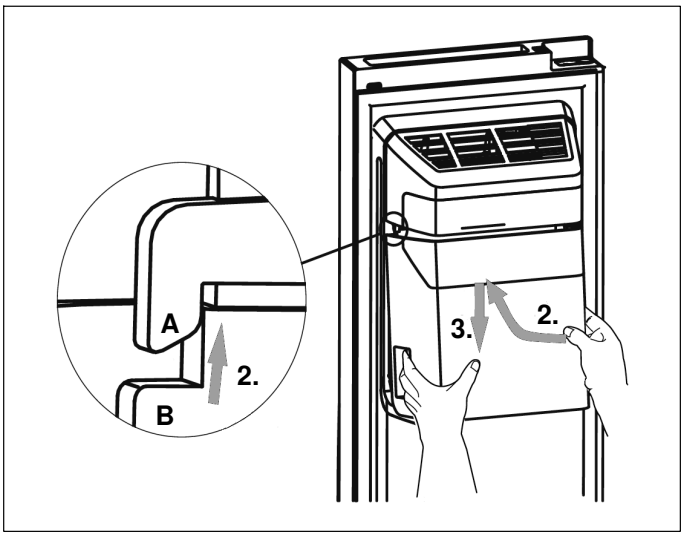

2. Hold at the handle and push up the ice bucket. Ensure that on both sides the ice bucket (B) is wedged into the buckles (A) of the ice maker.
3. Pull down the ice bucket and ensure it is held firmly.

Defrosting

Although this appliance automatically defrosts, a layer of frost may occur on the freezer compartment's interior walls if the door is opened frequently or kept open too long.

If the frost is too thick wait until food stocks are low and proceed as follows:

1. Remove existing food and accessories baskets, unplug the appliance from the mains power and leave the doors open. Ventilate the room thoroughly to accelerate the thawing process.
2. When defrosting is completed, clean your freezer as described above.

Replacing the water filter

In general, you should replace the water filter every 6 months to ensure the highest possible water quality.

After the appliance has dispensed about 4000 liters of water (usual consumption within 6 months), the water filter display ❖ blinks, and the buzzer sounds 3 times, to remind you that you need to replace the water filter.

Note:

- If no water is dispensed or it is dispensed slowly, the water filter may be clogged and may need to be replaced. Some areas have large amounts of lime in their water, which causes the water filter to clog more quickly.

Purchasing a new water filter

First of all, you need to purchase a new water filter. You can purchase the new filter from the retailer where you purchased your appliance or from the Customer service. Please check that the new filter is of the same type as before, so that it can be used correctly in your appliance.

Removing the old water filter

Notes

- Close the water valve before removing the filter.
- When you replace the filter, some water may leak from the filter and lines. Let the water flow into a pan, and wipe up any leakage that may have occurred.

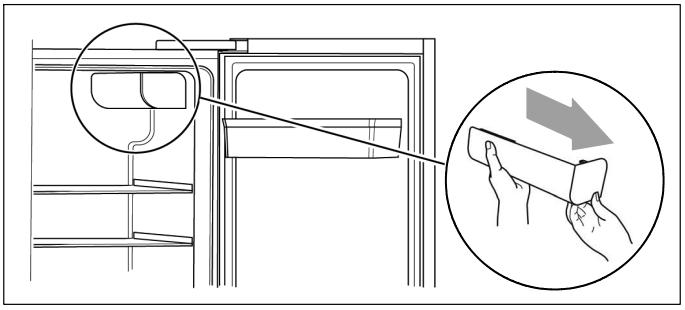

1. Open the refrigerator door to its maximum angle and remove the water filter cap by pulling it out slowly.

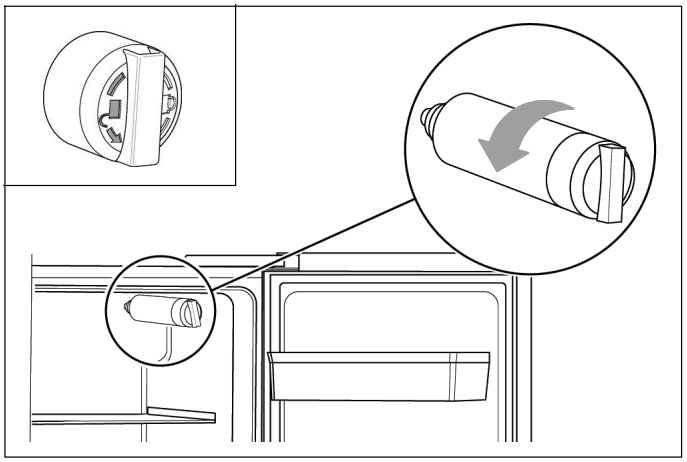

2. Screw out the old water filter in anticlockwise direction (see sign on the filter) and remove it.

⚠ Warning

Do not pull out the water filter with force, as this can cause material damage.

Installing the new water filter

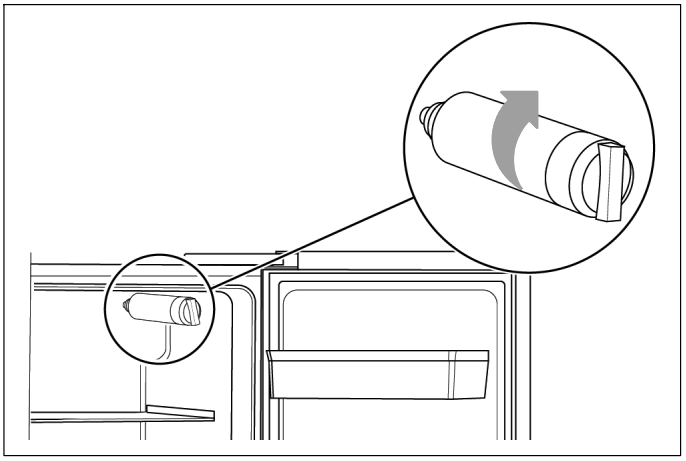

1. Screw in the new water filter in clockwise direction and make sure it is firmly fitted to the water filter base.

⚠ Warning

If not installed correctly, this can result in the appliance is not working properly, or result in water leakages.

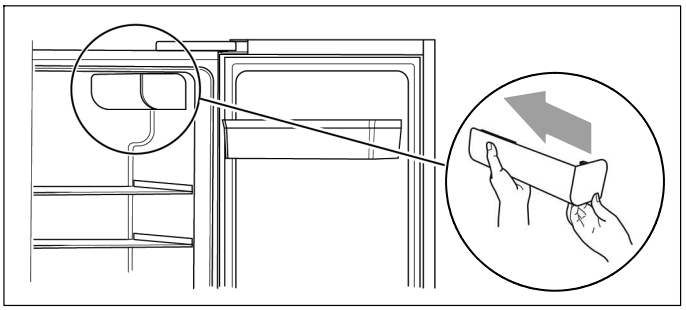

2. Reattach the filter cover by gently sliding it on.
3. After you have installed a new water filter, touch and hold the “Eco / Filter reset 3 sec” button for 3 seconds to reset the water filter display.

Light (LED)

Your appliance features a maintenance-free LED light.

These lights may be repaired by Customer service or authorised technicians only.

Tips for saving energy

- Install the appliance in a dry, well ventilated room! The appliance should not be installed in direct sunlight or near a heat source (e.g. radiator, cooker). If required, use an insulating plate.
- Do not block the ventilation openings in the appliance.
- Allow warm food and drinks to cool down before placing in the appliance.
- Thaw frozen food in the refrigerator compartment and use the low temperature of the frozen food to cool refrigerated food.
- Open the appliance as briefly as possible.
- Ensure that the freezer compartment door is always closed properly.
- The arrangement of the fittings does not affect the energy rating of the appliance.
- The ice maker can be turned off to save water and energy, if no ice is needed.

Operating noises

Quite normal noises

- Compressor running noises.
- Air movement noise from the small fan motor in the fridge compartment or other compartments.
- Gurgling sound similar to water boiling.
- Popping noise during automatic defrosting.
- Clicking noise before the compressor starts.
- Noises, when the ice maker dumps ice into the ice bucket.
- When touching the button, the water pump will start and there is little noise when the pump is working.

Preventing noises

The appliance is not level

Please align the appliance with a spirit level. Use the height-adjustable feet or place packing underneath them.

The appliance is not free-standing

Please move the appliance away from adjacent units or appliances.

Containers or storage areas wobble or stick

Please check the removable parts and re-insert them correctly if required.

Bottles or receptacles are touching each other

Move the bottles or receptacles slightly away from each other.

Eliminating minor faults yourself

Before you call Customer service:

Please check whether you can eliminate the fault yourself based on the following information.
Customer service will charge you for advice even if the appliance is still under guarantee!

Fault	Possible cause	Remedial action
Appliance is not working	Mains plug has not been inserted properly.	Check whether the power cord is plugged into the power outlet properly.
	The fuse has been switched off or is defective.	Check the fuse; replace if necessary.
	Power failure.	Check the circuit of your power supply.
	The ambient temperature is too low.	Try setting the chamber temperature to a colder level to solve this problem.
	It is normal that the refrigerator is not operating during the automatic defrost cycle, or for a short time after the appliance is switched on to protect the compressor.	
Odours from the compartments	The interior is dirty.	Clean the interior.
	Some food, containers or wrapping cause odours.	
The motor runs continuously	It is normal to frequently hear the sound of the motor, it will need to run more when in following circumstances: ■ Temperature setting is set colder than necessary. ■ A large quantity of warm food has recently been stored within the appliance. ■ The temperature outside the appliance is too high. ■ Doors are kept open too long or too often. ■ After your installing the appliance or it has been switched off for a long time.	
A layer of frost occurs in the compartment	Air outlets are blocked; insufficient ventilation; door not fully closed.	Check that the air outlets are not blocked by food and ensure food is placed within the appliance to allow sufficient ventilation. Ensure that door is fully closed. To remove the frost: ⟶ *chapter "Cleaning the appliance"*.
Temperature inside is too warm	You may have left the doors open too long or too frequently; or the doors are kept open by some obstacle; or the appliance is located with insufficient clearance at the sides, back or top.	Do not open the doors unnecessarily or longer than necessary; check clearance of appliance.
Doors can't be closed easily	Appliance is not tilted to the back about 15 mm. Something inside is preventing the doors from closing.	Check tilting and correct by turning the adjustable feet, if necessary. Check interior and remove obstacle.
The light is not working	LED light is automatically switched off due to the door beeing kept open for too long. LED light is damaged.	Close and reopen the door to reactivate the light. Have the LED light be replaced ⟶ *chapter "Light (LED)"*.

Fault	Possible cause	Remedial action
Water drips on the floor	Water pan at the rear bottom of the appliance not properly levelled or draining spout not properly positioned to the pan or spout blocked. Water connection is not tight. Ice in the ice bucket is melt to water, caused by power failure.	Check water pan and draining spout at the rear. Check water connection and tighten the nuts. Check ice bucket and empty it, if necessary.
Dispenser ist not working	Water line not connected or water valve closed. Water line crushed or kinked. Water filter not installed correctly or clogged. Water tank frozen due to too low temperature of refrigerator compartment. Child lock active or freezer door open.	Check the water line and the water valve. Check water filter. Select a warmer setting of the refrigerator compartment. Deactivate child lock. Close freezer door.
Ice is not dispensed	After installation, it will take several hours until the freezer has reached it's temperature and ice cubes can be produced. Water line not connected or water valve closed. Water filter not installed correctly or clogged. Ice cubes stick together in the ice bucket or ice stuck in the chute. Ice maker is turned off.	Check if the water line is connected and the water valve is open. Check water filter. Check ice cute. Check ice bucket and empty it, if necessary. Turn on the ice maker.

Customer service

Your local Customer service can be found in the telephone directory or in the Customer service index. Please provide Customer service with the appliance product number (E-Nr.) and production number (FD-Nr.).

These specifications can be found on the rating plate.

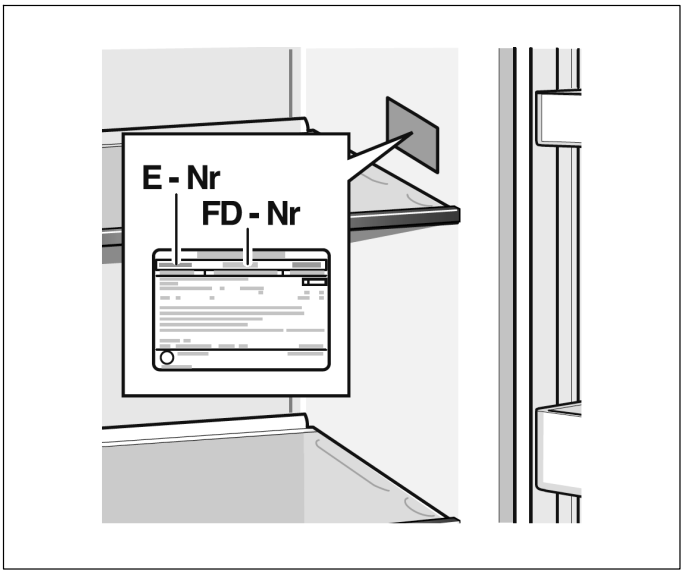

To prevent unnecessary call-outs, please assist Customer service by quoting the product and production numbers. This will save you additional costs.

Repair order and advice on faults

Contact information for all countries can be found on the enclosed Customer service list.

GB	0344 892 8989	Calls charged at local or mobile rate.
IE	01450 2655	0.03 € per minute at peak. Off peak 0.0088 € per minute.



BSH Hausgeräte GmbH
Carl-Wery-Straße 34
81739 München, GERMANY

REGISTER YOUR PRODUCT
ONLINE NEFF-HOME.COM

8001199210
en
(0206)