## TABLE OF CONTENTS

Introduction . . . . . 1
Warranty Registration . . . . . 1
General Precautions . . . . . 2
Installation Specifications . . . . . 2
Preparing the Space . . . . . 3
Preparing Electrical Connections . . . . . 3
Unpacking and Moving the Unit . . . . . 3
Anti-Tip Brackets . . . . . 3
Installation . . . . . 4
Shelving . . . . . 4
Door Panel Options . . . . . 5
Wood Overlay Installation . . . . . 6
Wooden Wine Rack Trim Finishing . . . . . 8
Operation . . . . . 8
General . . . . . 8
Interior Light . . . . . 8
Loading Product . . . . . 8
Temperature Control . . . . . 8
Checking Product Temperature . . . . . 9
Maintenance . . . . . 9
Cleaning . . . . . 9
Cleaning the Condenser . . . . . 8
Troubleshooting . . . . . 10
Warranty . . . . . 12

## INTRODUCTION

Congratulations on your purchase of a Perlick residential refrigeration product. Celebrating over 91 years of excellence, Perlick is the industry leader in commercial refrigeration systems. Today, Perlick has taken its expertise and experience into creating the highest quality and most innovative residential products on the market. Perlick's product offering gives you the opportunity to enjoy the functionality and user friendliness in just about any room of your home, including kitchens, bedrooms, entertainment rooms, basements and even bathrooms. All Perlick products are built with commercial-grade stainless steel – providing you with the beauty and durability for a lifetime of use.

This Installation and Operation manual will answer your questions about the features, operation and maintenance of your Perlick unit. If you have questions that are not addressed here, call 800-558-5592.

IMPORTANT: Please read all instructions completely before attempting to install or operate the unit. Take note of DANGER, CAUTION and WARNING when they appear in the manual. This information is important for the safe and efficient installation, operation and care of your Perlick unit.

DANGER indicates a hazard that will result in serious injury or death if precautions are not followed.

WARNING indicates a hazard may cause serious injury or death if precautions are not followed.

CAUTION indicates a hazard where minor injury or product damage may occur if you do not follow instructions.

## WARRANTY REGISTRATION

To request information or service, the model number and serial number must be provided. This information is located on the inside ceiling of the unit and on the warranty registration card included with information packet shipped with the unit.

IMPORTANT: Read through the included warranty statement then complete and mail the Warranty Registration Card as soon as possible to validate the registration date. Warranty registration can also be done online at www.perlick.com. If warranty registration is not completed, Perlick will use the date of sale as the first date of warranty for the unit. Please record the purchase date of the unit and the dealer's name, address and telephone number below.

Model Number_____

Serial Number _____

Purchase Date _____

Dealer Name _____

Dealer Address_____

Dealer Phone No._____

Retain this manual along with the sales receipt for future reference.

© 2009

## GENERAL PRECAUTIONS

DANGER

Risk of child entrapment. Before you throw away your old refrigerator or freezer, take off the doors and leave shelves in place so children may not easily climb inside.

DANGER

Altering or cutting of the power cord, or removal of the power plug, or direct wiring can cause serious injury, fire and/or loss of property and/or life and will void the warranty.

WARNING

- Never attempt to repair or perform maintenance on the unit until the electricity has been disconnected.
- The anti-tip kit must be installed on this unit before it is used. Never use the shelves or doors as steps or to support more than they are designed to support.

CAUTION

- Do not lift unit by shelves or door handle.
- Failure to clean the condenser every three months can cause the unit to malfunction. This could void the warranty.
- Never install the unit behind closed doors. Be sure front louvered toe plate is free of obstruction. Obstructing free air flow can cause unit to malfunction and may void the warranty.

CAUTION

Use only Perlick replacement parts. Imitation parts can damage the unit, and may void the warranty.

## INSTALLATION SPECIFICATIONS

General

- All electrical instructions assume that outlet is located 4-10 inches from the floor.
- Floor must be level in area of installation. Leg levelers are used for fine-tune adjustment only and should not be used to compensate for floor differences exceeding 1/2".
- When moving unit into position, take care to protect floor surface with cardboard, rugs, etc.
- Never attempt to move unit without the aid of at least one other person.
- Always secure doors shut prior to moving the unit.

Finished Rough Opening Requirements

- Height: 32-1/2"
- Depth: 24"
- Width: 24"

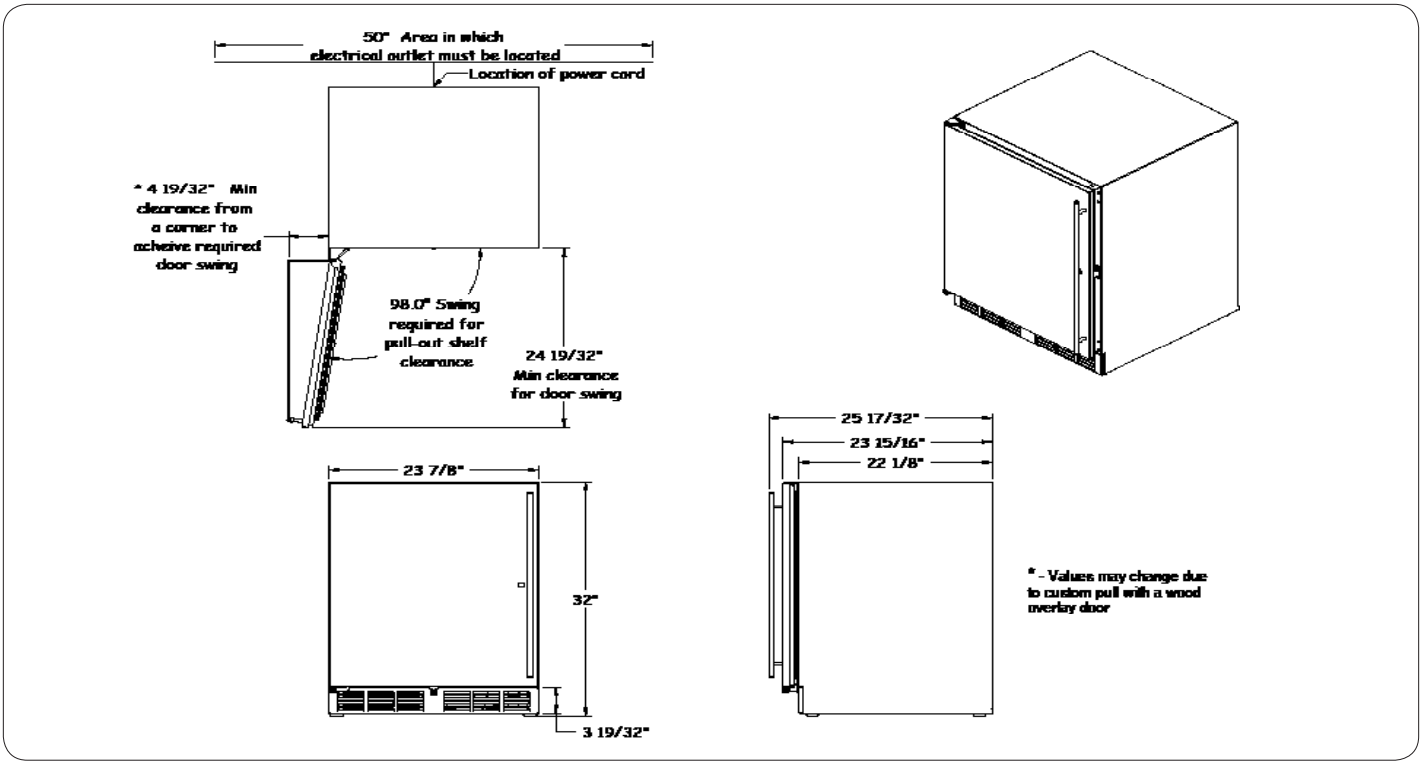


Figure 1. Dimensions


© 2009

## PREPARING THE SPACE

Make sure the installation opening is properly prepared. Refer to Figure 1 for space dimensions.

CAUTION

If unit is to be installed under a countertop, it is recommended that the countertop be supported by a structure other than the unit itself, to prevent damage to the countertop.

IMPORTANT: For a cabinet door to operate properly, the door must open a minimum of 100° (see Figure 1). Use a minimum 4-1/2" filler in corner installations to ensure a 100° opening. Allow enough clearance in front of the unit for full door swing or shelf pull-out.

IMPORTANT: Make sure floor under unit is level with the surrounding finished floor. Protect a finished floor with plywood, cardboard or some other suitable material before moving the unit into place. Failure to do this may result in damage to the floor.

## PREPARING ELECTRICAL CONNECTIONS

A 115 volt, 60Hz, 15 amp circuit breaker and electrical supply are required. A separate circuit is recommended

Follow the National Electrical Code along with local codes and ordinances when installing the receptacle.

All Perlick units come equipped with a NEMA 5-15P, 90° plug with a 5' cord (minimum) extending beyond the rear of the unit. The electrical outlet must be flush with, or recessed into, the back wall.

DANGER

ELECTROCUTION HAZARD!

Electrical grounding required. This appliance is equipped with a 3-prong (grounding) polarized plug for protection against possible shock hazards.

- Never remove the round grounding prong from the plug.
- Never use a 2-prong grounding adapter.
- Never use an extension cord to connect power to the unit.

If a 2-prong wall receptacle is encountered, or a longer power cord is required, contact a qualified electrician to install the proper 3-prong receptacle in accordance with applicable electrical codes.

DANGER

Failure to comply with the above electrical guidelines may result in possible injury/death/fire or loss of property.

## UNPACKING AND MOVING THE UNIT

CAUTION

Do not cut cardboard sleeve covering the unit. Cutting may result in damage to the exterior of the unit.

1. Uncrate the unit outside on a flat level surface. Remove the cardboard sleeve by removing the banding holding the sleeve to the shipping base. Carefully lift the cardboard sleeve up over the top of the cabinet.

2. Carefully lift unit off base and onto a hand truck or dolly (this should be done with a minimum of two people, larger cabinets may require additional helpers). Make sure unit is balanced on transporting device. Secure unit to transporting device using soft flexible strapping. Protect cabinet surfaces with cloth material where strapping contacts the unit.

3. Before moving unit, secure door to unit with tape to hold the door closed.

WARNING

A minimum of two people should lift the cabinet off the base to prevent possible personal injury.

4. Carefully move unit to installation site and place in front of opening.

## ANTI-TIP BRACKETS

WARNING

Unit may tip forward if loaded racks/shelves are all pulled out at the same time. To prevent tipping and provide a stable installation, the unit must be secured in place with the anti-tip brackets provided with the unit.

A set of metal anti-tip brackets and #10 x 3/4" screws are supplied with the unit. The anti-tip brackets, when properly installed, should secure the rear legs and prevent the unit from tipping forward.

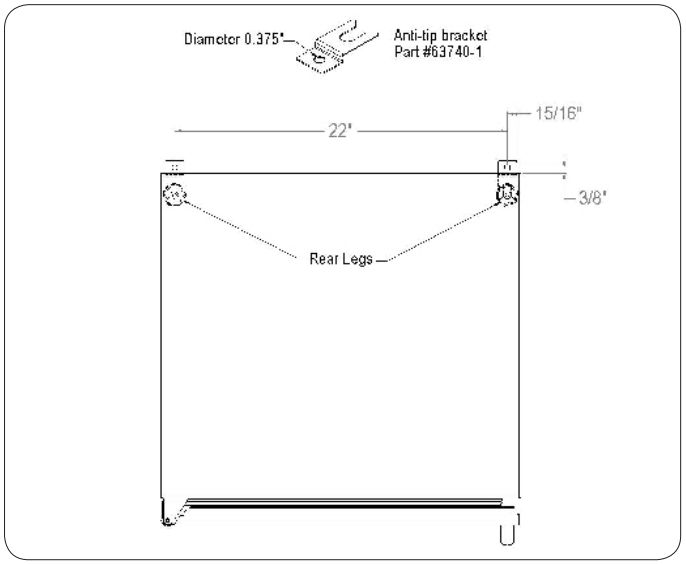


Figure 2. Anti-Tip-Over Bracket Mounting

Some installation sites may require modification to provide a secure surface for attaching the brackets. Refer to Figure 2 for mounting bracket locations.

IMPORTANT: If installing on a concrete floor, concrete fasteners are required and are not included in the Anti-Tip kit.

## INSTALLATION

CAUTION

Finished flooring should be protected with appropriate material to avoid damage from moving the unit.

If unit has been laid on its back or sides, place unit upright and allow minimum of 24 hours before connecting power.

1. Plug the unit into the 15 amp grounded outlet located in the installation opening. With power applied to the unit, check that lighting and cooling function operate properly, then turn off power to the wall outlet at the circuit breaker.

WARNING

Shut off power to the wall outlet before installing unit into the opening.

2. Check that the following are level and square:
   - front face and interior opening
   - installation opening and floor surface
   - countertop bottom front edge

IMPORTANT: The floor under the unit must be at the same level as the surrounding finished floor.

3. If all surfaces are level, refer to Figure 3 and perform the following:

   a. Measure from the floor to the bottom of the front edge of the countertop.

   b. Measure the rear of unit cabinet from floor to top of cabinet, at back corners.

   c. Adjust rear legs so B measurement equals A measurement. Using an adjustable wrench or pliers, turn legs counterclockwise to raise the unit or clockwise to lower the unit.

IMPORTANT: Levelling legs should not extend more than 3/4" from bottom of unit.

4. Slide the unit into position. Make sure the rear leveling legs slide under the anit-tip brackets. Push the unit into the opening until the door is flush with the surrounding cabinetry, or until the rear legs are tight against the anti-tip brackets.

IMPORTANT: The rear leveling legs must be engaged under the anti-tip brackets.

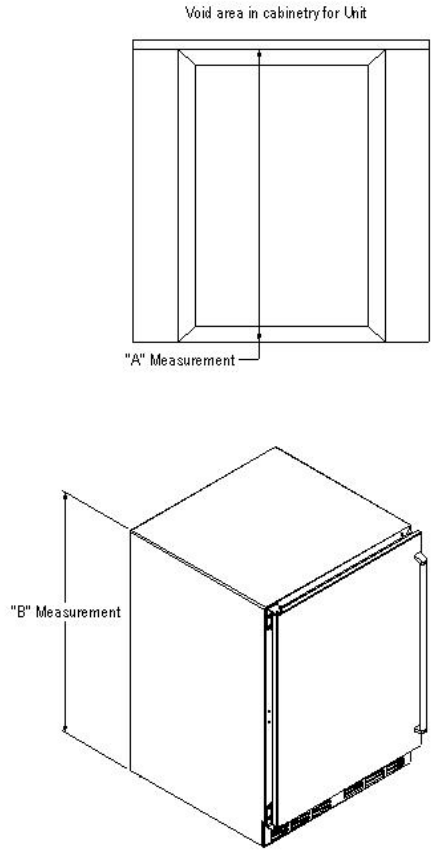


Figure 3. Leveling

5. Shim the front of the unit so the front door is flush with the surrounding cabinetry. Adjust the front legs to support the countertop at the shimmed height. Using an adjustable wrench or pliers, turn legs counterclockwise to raise the unit or clockwise to lower the unit. Countertop should be resting on top of the unit.

IMPORTANT: If countertop is not resting entirely on unit top, shim the countertop to prevent damage to the countertop.

CAUTION

To prevent damage to the countertop and unit underneath, do not place heavy objects on countertop directly above the unit.

6. Check interior door openings inside unit and ensure unit is level.


© 2009

## SHELVING

IMPORTANT: To achieve maximum performance, interior louver openings and fan guard openings should never be obstructed.

### Refrigerator

The single door unit comes standard with two black vinyl coated adjustable full extension pullout shelves.

### Wine Reserve

The single door unit comes standard with five full extension black vinyl coated wine racks capable of storing 40 total wine bottles and additional storage on the bottom for 8 more bottles. Shelves are removable and adjustable to accommodate oversized (magnum) bottles.

### Beverage Center

The single door unit comes standard with two full extension black vinyl coated wine racks and one industry exclusive full extension pullout shelf allowing for storage of both wine and beverages. Shelving positions are adjustable.

### Adjusting Full Extension Shelving

1. Pull the shelf out to its farthest position. Locate the tabs in the middle of both extenders (Figure 4). Lift one tab up, while pushing the opposite tab down and pull shelf out.

2. Reposition each bracket separately. Grasp the middle of the bracket, pull the front end up and out, then forward to remove (Figure 5).

3. Place bracket at the desired position. Push the rear hook into the rear key slot. Set front of bracket on the wall hook.

4. Repeat for other bracket(s).

5. Push extenders completely into the unit. Align the shelf grooves with the extenders and slide completely into the unit.

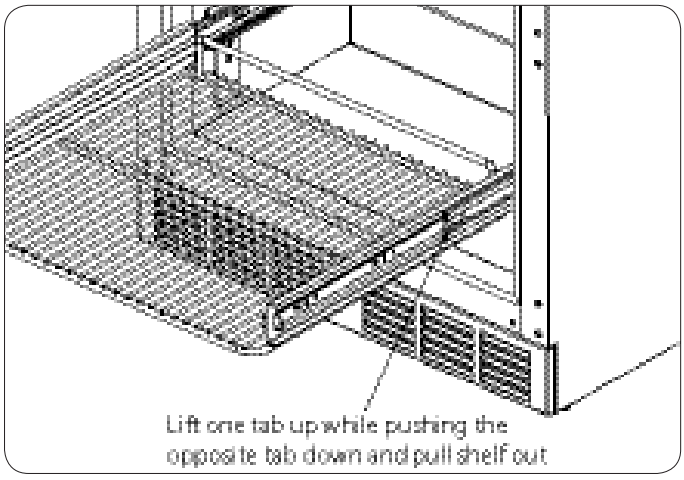


Figure 4. Sliding Shelf Extender Tabs

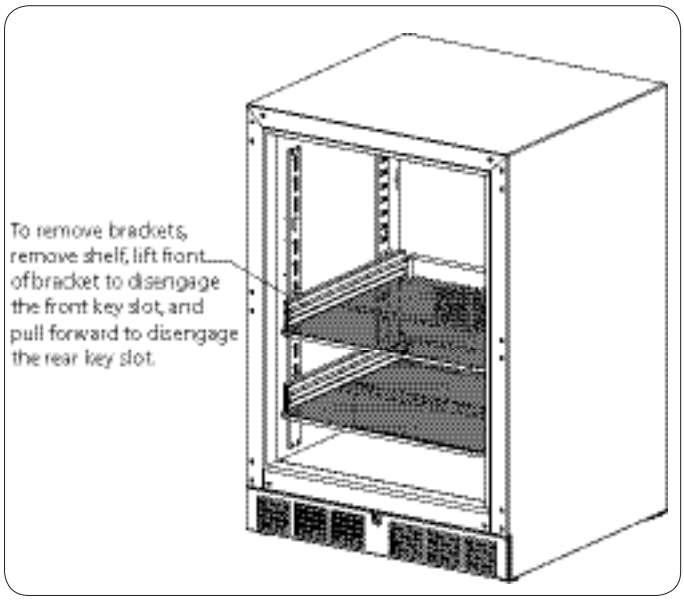


Figure 5. Sliding Shelf Mounting Brackets

© 2009

## DOOR PANEL OPTIONS

Perlick residential units offer a variety of door panel design alternatives; solid stainless steel, solid wood overlay, stainless steel glass and wood overlay glass.

Solid stainless steel and stainless steel glass doors are shipped from the factory with decorative stainless steel panels and handles in place on the appliance. If optional door lock is ordered, the unit comes pre-assembled from the factory.

Solid wood overlay and glass wood overlay doors are designed to accept a decorative front panel to match surrounding cabinetry and door handles. The panel and door handles are supplied by the customer. If ordered with the optional door lock, see Door Lock Installation on page 7.

IMPORTANT: Glass with stainless trim and glass with wood trim may sweat in conditions with relative humidity over 75%.

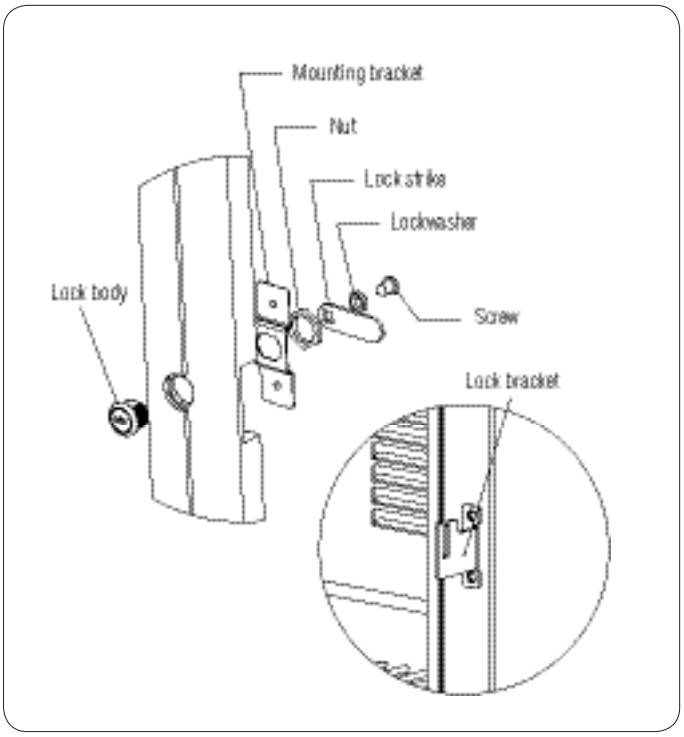


Figure 6. Door Lock - Optional

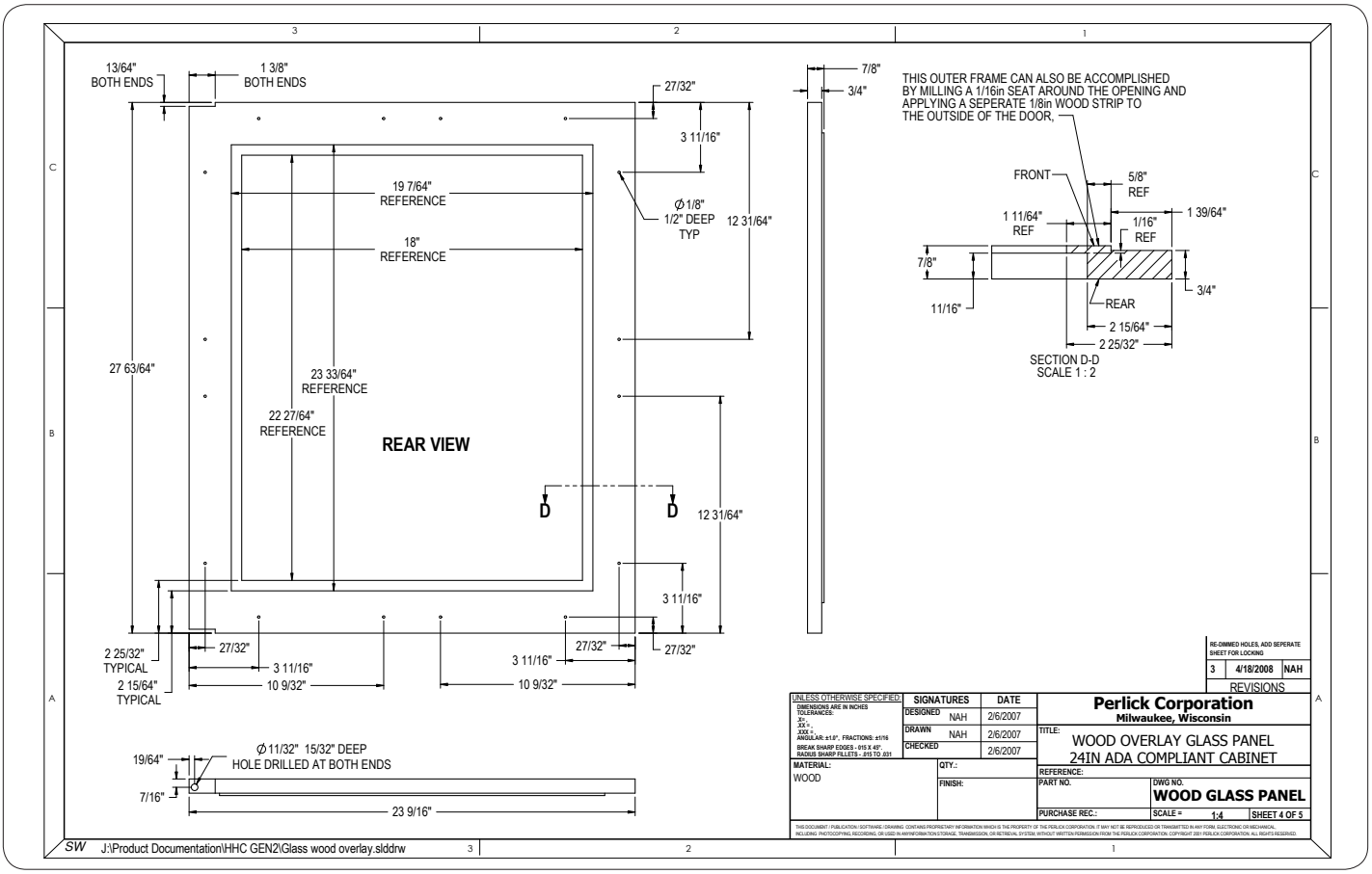


Figure 7. Glass Wood Overlay Door Panel


© 2009

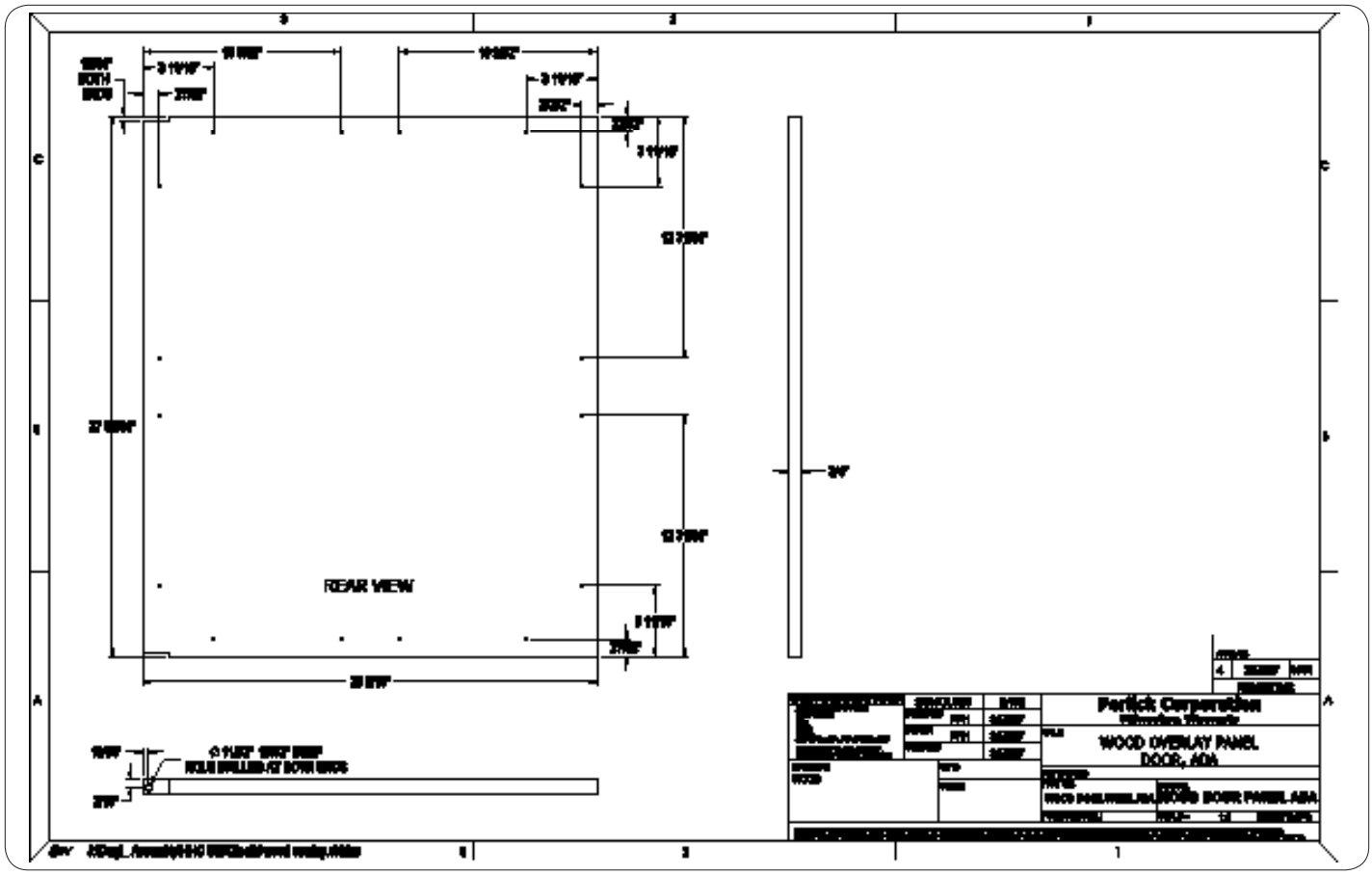


Figure 8. Solid Wood Overlay Door Panel

## WOOD OVERLAY INSTALLATION

Before beginning installation, check all components for proper fit and finish.

WARNING

- All overlay doors require a trim panel at least 3/4" thick.
- The solid wood overlay panel should not weigh more than 20 pounds.
- The glass wood overlay panel should not weigh more than 10 pounds.

The following instructions cover installing a solid wood overlay or glass wood overlay panel, handle and optional lock.

IMPORTANT: Contact the factory for full size wood overlay panel layouts.

Refer to Figure 7 for glass wood overlay door panel.

Refer to Figure 8 for solid wood overlay door panel.

Door Lock Installation (optional)

When installing to wood overlay, perform lock installation before mounting wood overlay to door.

1. See Figure 6. Attach mounting bracket to wood overlay.
2. Insert lock body and attach with nut.
3. Install lock strike, lock washer and screw.
4. Use the key to turn the lock and verify that the lock and unlock positions are correct: unlock should be up, lock should be horizontal. Adjust as necessary.
5. Install overlay with lock assembly to the door.
6. Install lock bracket to the unit.

Handle Installation

CAUTION

Handle mounting on wood overlay door should be mounted on overlay panel only (not the door) to avoid damage to the factory door.

1. Handle must be attached to overlay before mounting overlay onto door. Mark rear of wood overlay panel with handle fastening locations.
2. Drill through wood overlay panel at marked locations taking care not to damage the wood overlay panel.

© 2009

3. Countersink screw heads so screw heads are flush with backside of panel. Attach handle to overlay panel.

Overlay Installation

CAUTION

Proper wood working tools should be used to avoid damage or errors in workmanship.

1. With the unit secured in position, open the door and make sure panel pre-drilled holes align with door frame holes.

2. Loosely attach four corners of the overlay panel to the door using #10 x 1" wood screws, installed through the door frame from the rear.

3. Check for overall wood overlay panel fit, position and function. Make minor adjustments as necessary. When panel is properly aligned, tighten mounting screws securely. Install the rest of the mounting screws and tighten securely.

CAUTION

Do not overtighten wood overlay attachment screws as this may damage factory supplied door frame.

## WOODEN WINE RACK TRIM FINISHING

All wine racks come with an unfinished solid hardwood face, which can be removed and replaced with other wood to match the surrounding cabinetry.

The included unfinished faces can be finished and sealed. In many cases, stains and/or finishes have odors that may be objectionable in an enclosed area. To remove the front wood face from the wine shelf, simply pull out the wine shelf and remove the fasteners. Finish as desired and re-install with original fasteners.

## OPERATION

General

The unit is equipped with a state-of-the-art refrigeration system and is a frost-free model. The evaporator coil automatically defrosts on demand at predetermined intervals.

Interior Light

The unit is equipped with an interior light that illuminates when the door is opened. A manual switch is located next to light for displaying the product through a glass door. Always ensure the manual switch is in the off position before closing a solid wood or stainless steel door. If manual switch is left on for an extended period of time, it may increase the cabinet temperature, especially at the top, and cause the refrigeration system to run longer.

Loading Product

IMPORTANT: Before storing perishables, allow unit to run for a minimum of 24 hours to allow temperature stabilization after start-up.

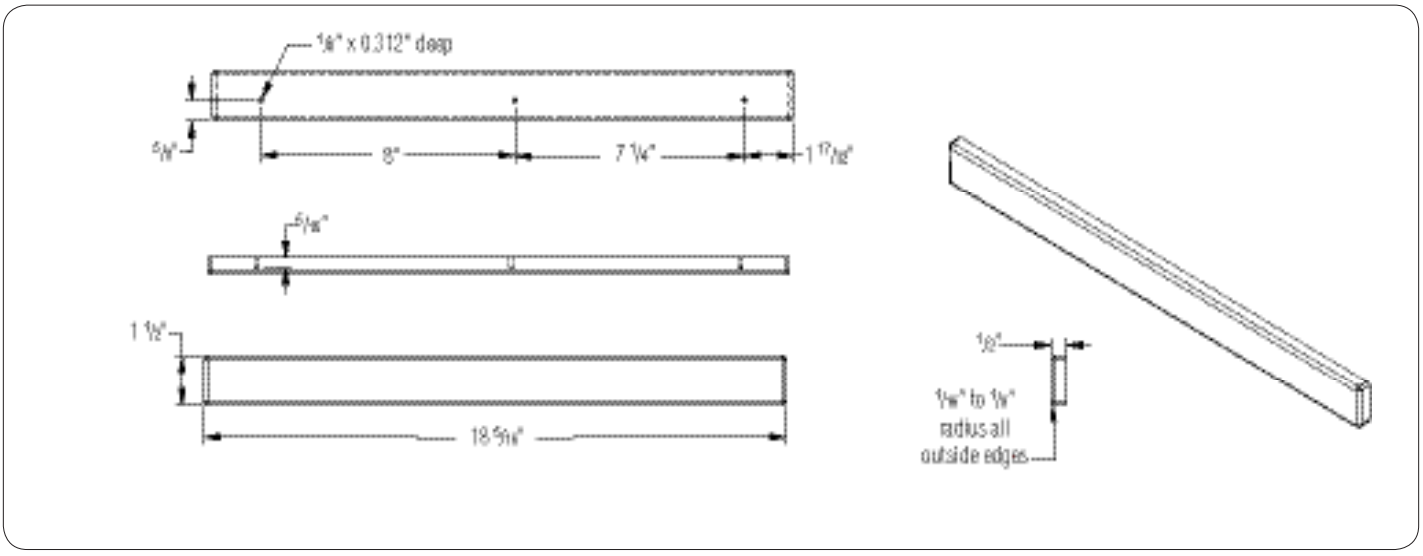


Figure 9. Wooden Wine Rack Trim


© 2009

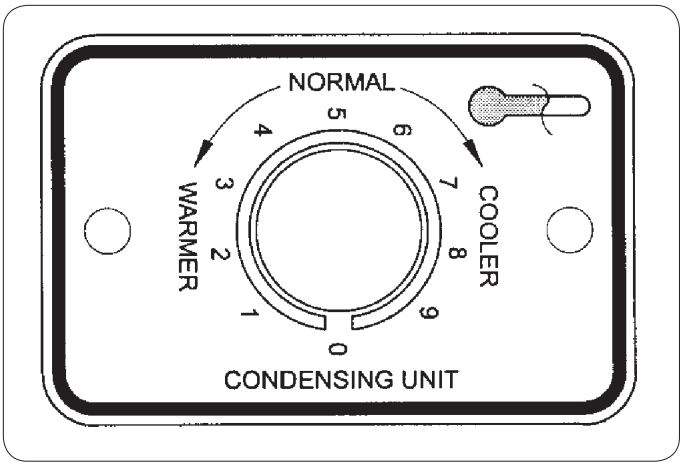


Figure 10. Control Panel

When loading items into unit, do not block internal louvers and fan guard openings or performance will be decreased.

Temperature Control

The controller is located at the top rear panel of the cabinet (Figure 10). Approximate temperature operating ranges are:

Refrigerator: 33°F minimum, 39° maximum

Wine Reserve: 40°F minimum, 65° maximum

Beverage Center: 36°F minimum, 48° maximum

Adjusting Temperature

- Colder Temperatures: Turn the adjusting screw clockwise (to the right).
- Warmer Temperatures: Turn the adjusting screw counterclockwise (to the left).
- Temperature Control "OFF": Turn the adjusting screw completely counterclockwise to the "OFF" position until a click is heard.

The condenser fan and motor turns off and on with the compressor.

Checking Product Temperature

To accurately check the temperature of the product stored in a refrigerated compartment, insert an accurate thermometer into a sealable plastic (non-breakable) bottle, partially filled with water. Tighten the cap securely.

Place the bottle into the desired area for 24 hours. Refrain from opening the unit during testing period. After 24 hours, check the temperature of the water. Adjust the control settings if necessary and re-test.

The units are pre-set to achieve the recommended temperature range when installed in a 70°F ambient environment. Factors which affect the internal temperatures of the cabinet include the following:

- Temperature setting
- Room temperature where installed
- Number of times the door is opened and closed
- Length of time door is left opened
- Adjacent compartment temperature
- Style of door installed
- Door gasket and sealing
- Amount of time internal light is illuminated
- Installation in direct sunlight or near a heat source

## MAINTENANCE

WARNING

Shut off the electricity to the unit before cleaning the condenser and other routing maintenance.

Cleaning

To clean stainless steel exterior or interior surfaces, use a soft, non-abrasive stainless steel cleaner to wipe down the surfaces.

Glass doors can be cleaned using any standard glass cleaner available on the market.

To clean interior non-metallic surfaces and removable parts, wash with a mild solution of soap and lukewarm water with a little baking soda. Rinse and dry thoroughly. Avoid getting water on lights, control panel, fan motor, and unfinished wood wine rack faces.

CAUTION

Do not use abrasive cleaners or cloths on any of the interior or exterior surfaces or removable parts.

Cleaning the Condenser

The condenser should be cleaned every 3 months. The condenser is located behind the toe plate (Figure 6). Remove the toe plate and use a soft bristle brush and vacuum to remove dust and lint. Avoid damaging or crushing the condenser fins or tubing. Upon completion, re-install the toe plate.

CAUTION

Failure to clean the condenser could result in temperature loss or mechanical failure. Clean this area every three months.

© 2009

## TROUBLESHOOTING

If the unit appears to be malfunctioning, read through the OPERATION section first, then check the guide below to identify and resolve the problem.

DANGER

Electrocution hazard! Never attempt to repair or perform maintenance on the unit until the main electrical power has been disconnected.

No interior light
- Is the bulb loose?
- Is the bulb burned out?

Light stays on when the door is closed
- Manual ON/OFF light switch is turned on.
- Is the door switch making contact with the plunger?

Noisy during operation
- Certain sounds are normal. Soft sounds from the compressor, fan motor and valves will be heard.

The refrigerated cabinet isn't running
- Is there electrical power to the unit?
- Is the building circuit breaker or fuse on?
- Is the control set properly?
- Is the condenser area clean?

The refrigerated compartment is warmer than usual
- Is the control set properly?
- Is the light staying on?
- Is the condenser area clean and free of obstruction?
- Has the door been open for a long time or more frequent door openings occurred?
- Are the internal louvers and fan guard openings obstructed?

The refrigerated compartment is cooler than usual
- Is the control set properly?
- Is the door closing and sealing properly?

The refrigeration runs for long periods of time
- Is the condenser area clean and free of obstruction?
- Has the door been open for a long time or more frequent door openings occurred?
- Has warm product just been placed in the unit?
- On hot days and in warm room temperatures, the system will run longer.

Condensation forms inside the refrigerated compartments
- This is normal during high humidity and frequent door openings.
- Are the doors closing and sealing properly?


© 2009

Condensation forms on the outside of the unit

- During periods of high humidity, some condensation might appear on the outside surface. The condensation will disappear when the humidity drops. Meanwhile, be sure doors are closing and sealing properly. If condensation persists, contact your Perlick Factory Authorized Service Center.

To obtain product information

- Contact your selling dealer.
- Inquire on the web at www.perlick.com.
- Call 800/558-5592 for factory assistance for information for planning, installation or product information.
- Write to Perlick Corporation, Customer Service Department, 8300 W. Good Hope Road, Milwaukee, WI 53223.
- E-mail us at warrantyserv@perlick.com

To obtain product service, replacement parts or accessories

- Use only genuine Perlick replacement parts and accessories. Genuine Perlick parts and accessories are designed to work correctly with Perlick products and offer superior service life. The use of non-Perlick parts can damage the unit and may void the warranty.
- Check the model and serial number of the unit located on the label attached to the inside top of the cabinet. Call a Perlick Factory Authorized Service Center. For the location of the nearest Service Center, contact your dealer, or inquire via the web at www.perlick.com, or write to: Perlick Corporation, Customer Service Department, 8300 W. Good Hope Road, Milwaukee, WI 53223, call 800-558-5592, or e-mail us at: warrantyserv@perlick.com.

© 2009

# PERLICK HOME REFRIGERATION PRODUCTS LIMITED WARRANTY

ENTIRE PRODUCT- Full Two Year Warranty:

For two years from the date of original installation, Perlick Corporation's warranty covers all parts and labor to repair or replace any part of the product, which proves to be defective in material and workmanship.

Additional- Third Through Sixth Year Limited Parts Only Warranty:

During the four years following expiration of the Two Year Limited Warranty, Perlick will supply replacement parts only for the hermetically sealed refrigeration system which consist of the compressor, condenser, drier, connecting tubing, evaporator, and hot gas bypass valve.

TERMS:

The Perlick Warranty applies to products installed in the fifty United States, the District of Columbia or the ten provinces of Canada.

All service provided by Perlick Corporation under the above warranty must be performed by authorized Perlick service representatives, unless otherwise specified by Perlick.

Service will be provided in the home during normal business hours.

This warranty applies only to products installed for normal residential use, it does not include adjusting the controls, door reversal, light bulb or cleaning the condenser.

This warranty is extended only to the original purchaser of the Perlick product.

The above warranty does not apply if:

- Failure of product was due to transportation
- Product was: improperly installed, misused, abused, operating with low voltage, wiring not conforming electrical codes, improperly maintained or modified.
- The original Bill of Sale, delivery date or serial number cannot be verified.
- Defective parts are not returned for inspection if so required by the Perlick Corporation.

To receive parts and or service and the name of the nearest Perlick authorized service representative, contact your Perlick dealer, distributor or Perlick Corporation's Customer Service Department; 8300 West Good Hope Road, Milwaukee Wisconsin, 53223; call 800/777-7267, E-mail us at customerserv@perlick.com , or visit our web: www.perlick.com.

This limited warranty is in lieu of any other warranty, expressed or implied, including, but not limited to any implied warranty of merchantability or fitness for a particular purpose; provided however, that to the extent required by law, implied warranties are included but do not extend beyond the duration of the express warranty first set above. Perlick's sole liability and your exclusive remedy under this warranty are set forth in the initial paragraph above. Perlick Corporation shall have no liability whatsoever for any incidental, consequential or special damages arising from the sale, use or installation of the product or from any other causes whatsoever, whether based on warranty (expressed or implied) or otherwise based on contract, tort or any other theory of liability.

Some states do not allow limitations on how long an implied warranty lasts or the exclusion or limitation of incidental or consequential damages, so the above limitations may not apply to you. This warranty gives you specific legal rights, and you may also have other rights, which vary, from state to state.


© 2009