Allavino
LUXURY WINE STORAGE

INSTRUCTION MANUAL

FREESTANDING WINE COOLER

MODEL: KWR55S-1SR



BEFORE USE, PLEASE READ AND FOLLOW ALL SAFETY RULES AND OPERATING INSTRUCTIONS.

Allavino has a policy of continuous improvement on its products and reserves the right to change materials and specifications without notice

ALLAVINO

8520 Miralani Dr., San Diego, CA 92126

Table of Contents

Diagram and Description 3

Safety Tips 4

Installation Instructions 5

Handle Installation 6

Operation Instructions 6

Setting Temperature 7

Racking Configuration 8

Care and Maintenance 8

Troubleshooting 9

Technical Specifications 10

Warranty Information 11

Diagram and Description

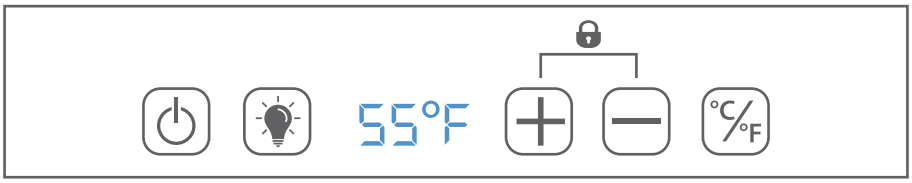

1. LED top light
2. Wood shelves
3. Adjustable Feet
4. Upper door hinge
5. Control panel
6. Door handle
7. Lower hinge

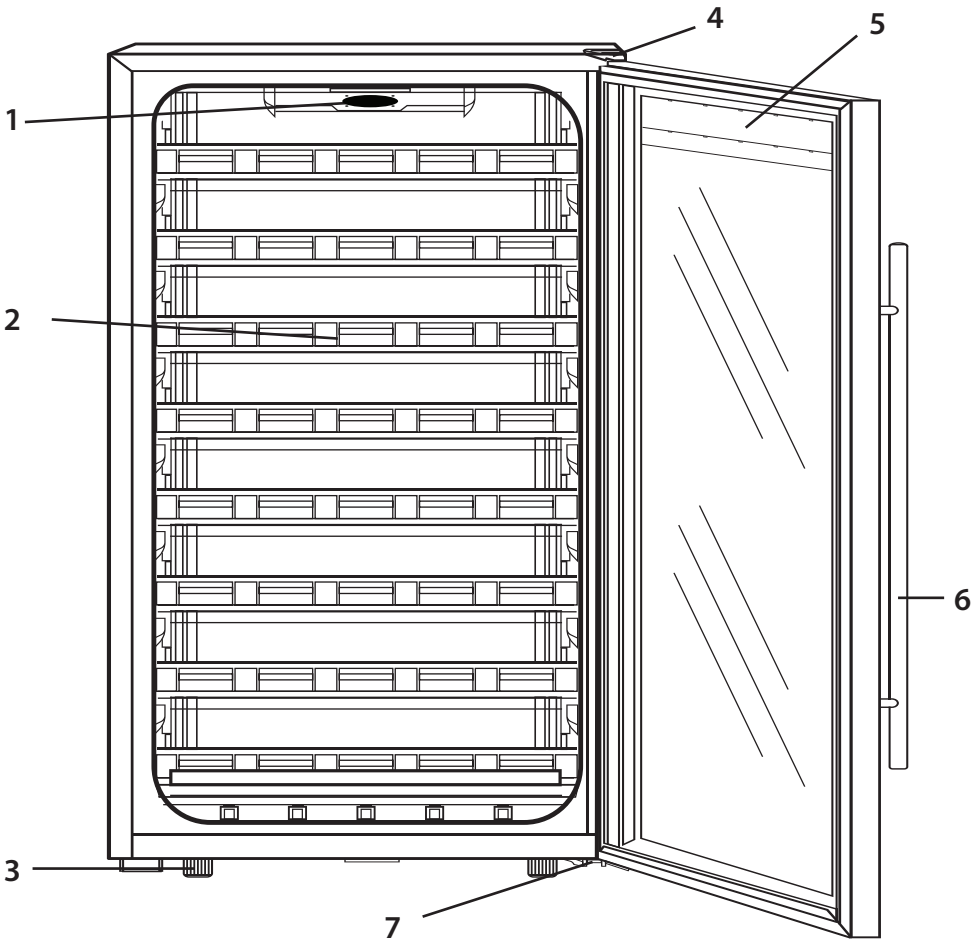

Safety Tips

Before using this appliance, it must be properly positioned and installed as described in this manual, so please read carefully. To reduce the risk of fire, electrical shock or injury when using this appliance, follow these basic precautions.

⚠ DANGER ⚠

- Plug into a grounded 3-prong outlet. Do not under any circumstances cut or remove the third ground prong from the power cord supplied, do not use an adapter, and do not use an extension cord.
- It is recommended that a separate circuit, serving only your appliance be used. Do not use outlets that can be turned off by a switch or pull chain.
- Never clean appliance parts with flammable fluids and do not store or use gasoline or other flammable vapors and liquids in the vicinity of this or any other appliance. The fumes can create a fire hazard or explosion.
- Unplug the appliance or disconnect power before cleaning or servicing. Failure to do so can result in electrical shock or death.
- Do not attempt to repair or replace any part of your appliance unless it is specifically recommended in this manual. All other servicing should be referred to a qualified technician.

⚠ WARNING ⚠

- Use two or more people to move and install appliance. Failure to do so can result in back or other injury.
- To ensure proper ventilation for your appliance, the front of the unit must be completely unobstructed. Choose a well-ventilated area with temperatures above 60°F (16°C) and below 90°F (32°C). This unit must be installed in an area protected from the element, such as wind, rain, water spray or drips.
- The appliance should not be located next to ovens, grills or other high heat sources or in areas of extreme cold.
- The appliance must be installed in accordance with state and local codes. A standard electrical supply (115 V AC only, 60 Hz), properly grounded in accordance with the National Electrical Code and local ordinances is required.
- Do not kink or pinch the power supply cord of appliance.
- The fuse (or circuit breaker) size should be 15 amperes.
- It is important for the appliance to be leveled in order to work properly. You may need to make several adjustments to level it.
- Never allow children to operate, play with or crawl inside the appliance. Child entrapment and suffocation are not just problems of the past, junked or abandoned appliances are still dangerous. When no longer using your old wine cellar, take off the door and leave the shelves in place so that children may not climb inside easily.
- Do not use solvent-based cleansers or abrasives on the interior as they may damage or discolor the interior.
- Because of potential safety hazards under certain conditions, it is strongly recommended that you do not use an extension cord with this appliance. However, if you must use an extension cord, it is absolutely necessary that it be a UL/CUL-Listed, 3-wire grounding type appliance extension cord having a grounding type plug and outlet and that the electrical rating of the cord be 115 volts and at least 10 amperes.

- If the appliance is going to be used in an area that is prone to power surges/outages, it is suggested that you use a power surge protector. The surge protector that you select must have a surge block high enough to protect the appliance it is connected to. Damages due to power surges are not considered a manufacturer covered defect and will void your product warranty.
- The cord should be secured behind the appliance and not left exposed or dangling to prevent accidental injury. Never unplug the appliance by pulling the power cord. Always grip the plug firmly and pull straight out from the receptacle. Repair or replace immediately all power cords that have become frayed or otherwise damaged. Do not use a cord with cracks or abrasion damage along its length or at either end. When moving the appliance, be careful not to damage the power cord.
- Do not use this apparatus for other than its intended purpose.
- California Proposition 65 Warning: This product may contain a substance known to the State of California to cause cancer, birth defects or other reproductive harm.

Failure to heed these safety warnings may result in extensive product damage, serious personal injury, or death.

Installation Instructions

BEFORE USE:

- Remove the exterior and interior packaging.
- Before connecting the unit to the power source, let it stand upright for approximately 4 hours. This will reduce the possibility of a malfunction in the cooling system from handling during transportation.
- Clean the interior surface with lukewarm water using a soft cloth.
- Install handles.
- This appliance is designed for free standing or built-in (fully recessed) installation.
- Place the unit on a flat, solid floor that is strong enough to support it when it is fully loaded. To level the appliance, adjust the front leveling leg at the bottom of the unit.
- When moving your wine cellar, please do not incline it more than 45 degrees.
- Locate the appliance away from direct sunlight and sources of heat (stove, heater, radiator, etc.). Direct sunlight may affect the acrylic coating and heat sources may increase electrical consumption. Extreme cold ambient temperatures may also cause the unit to perform improperly. The optimal ambient temperature range is 32°F - 100°F.
- The wine cellar should be placed in an area where the ambient temperature is less than 77 degrees Fahrenheit and higher than the lowest temperature you want to store your wine. If the ambient temperature is lower than the set temperature, the internal temperature will match the ambient temperature.
- Avoid locating the unit in damp areas.
- Plug the appliance into an exclusive, properly installed and grounded wall outlet. Do not under any circumstances cut or remove the third (ground) prong from the power cord. Any questions concerning power and/or electrical grounding should be directed to a certified electrician or authorized products service center.
- After plugging the appliance into a wall outlet, allow the unit to cool down for 3 to 4 hours before placing wine bottles in the appliance.

Handle Installation

Step 1: Remove the box containg the handle and screws from the wine unit.

Step 2: Pull out a bit of the rubber gasket from the back side of the holes.

Step 3: Insert the screws through the holes and connect with the handle.

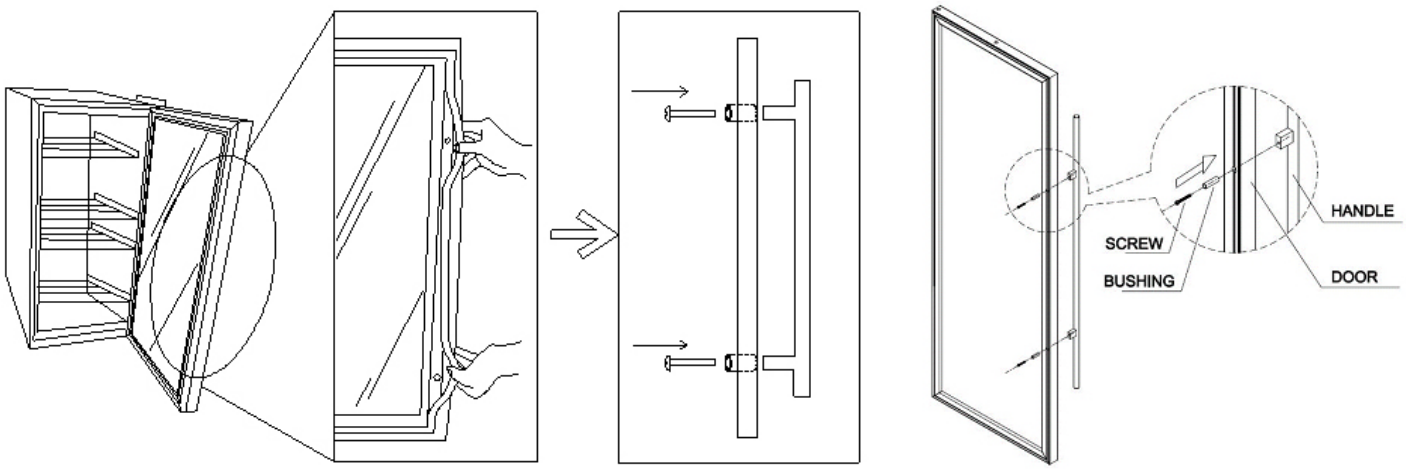

Operation Instructions

The wine unit should be placed in an area where the ambient temperature is between 32-100 degrees Fahrenheit. If the ambient temperature is above or below this range, the performance of the unit may be affected. For example, placing your unit in extreme cold or hot conditions may cause the interior temperatures to fluctuate.

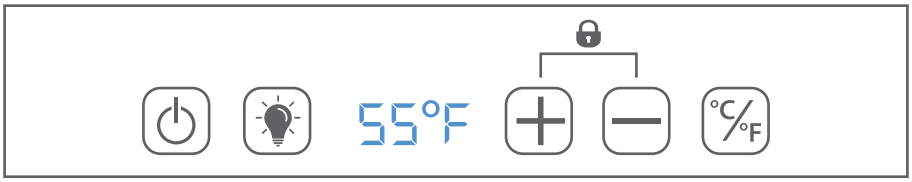

Your Allavino wine unit includes an operating panel on the front of the unit. The operating panel includes several features to operate and control the temperature of the wine refrigerator, including:

Power - Turns the unit on or off
Light - Turns the interior light on or off
°C/°F - Toggles the temperature display between Celsius and Fahrenheit
+ Button – Raises the temperature in 1 degree increments
- Button – Lowers the temperature in 1 degree increments
🔒 Button – Press and hold + & - buttons together for 5 seconds to unlock display
Display will lock itself after 20 seconds of no input

The unit has a locking door and two keys are provided. To lock the door, turn the key clockwise and turn it counterclockwise to unlock the door. Keep the keys in a safe place.

If you are going on vacation, you may leave the unit operating during vacations of less than three weeks. If the appliance will not be used for several months, you should remove all items and turn off the appliance. Clean and dry the interior thoroughly. To prevent mold growth, leave the door open slightly, blocking it open if necessary.

Setting Temperature

This Allavino Wine Cellar has a wide enough temperature range to store red, white, or sparkling wine. Different varietals of wine require different temperature settings. Red wine is generally stored between 50 and 65 degrees Fahrenheit, while white wines are stored between 40 and 50 degrees Fahrenheit. White wine can be stored at red wine temperatures for a short period of time (less than three months), and flash chilled before serving.

You can set the temperature as you desire by touching the + or - button. When you touch the buttons for the first time, the LED readout will show the original temperature set at the manufacturing facility. Each push of the button will adjust the temperature by one degree in the desired direction. Please be aware that the desired temperatures may fluctuate depending on whether the interior light is ON or OFF and depending on the orientation of the bottles.

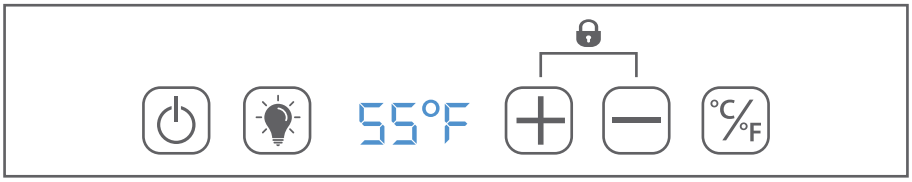

PLEASE NOTE:

- In the event of a power interruption, all previous temperature settings will be automatically saved and each compartment will return to the previous temperature setting.
- If the unit is unplugged, loses power, or is turned off, you must wait 3 to 5 minutes before restarting. Attempting to restart the wine unit before this time has elapsed may prevent it from starting.
- When you use the wine unit for the first time or restart the appliance after having been shut off for a long time, there will be a few degrees variance between the temperature you select and the one indicated on the LED readout for the first few hours of operation. After a few hours of operation, the temperature will normalize to the displayed temperature.

Racking Configuration

Disperse your bottles evenly throughout the unit so as not to concentrate weight in any one area. This also helps to provide an even temperature range throughout the unit. Make sure that bottles are not all grouped together either at the top or bottom of the cabinet.

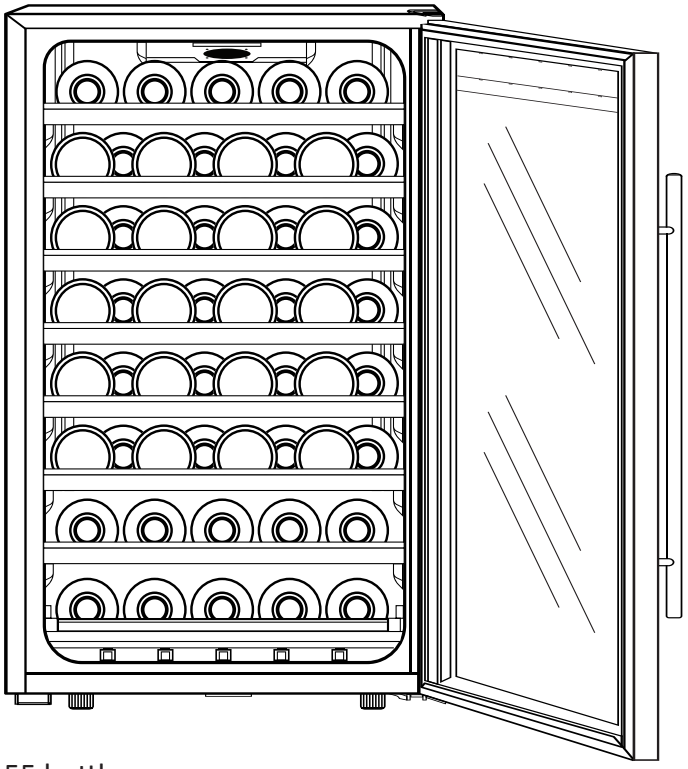

55 bottles

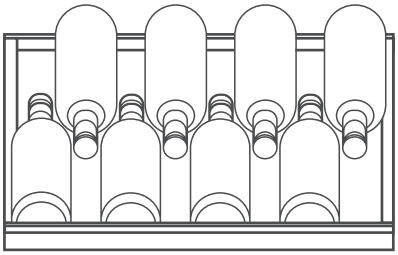

Middle shelves: hold 8 bottles

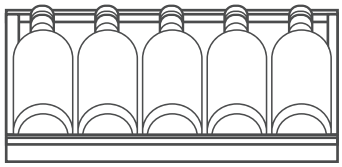

Top and Bottom shelves: hold 5 bottles

The maximum capacity can be reached with many different bottle sizes and is only affected when adding larger Pinot or Champagne bottles.

Care and Maintenance

Cleaning your wine unit:

- Turn off the power, unplug the appliance, and remove all items.
- Wash the inside surfaces with warm water and baking soda solution. The solution should be about 2 tablespoons of baking soda to a quart of water.
- Wash the shelves with a mild detergent solution.
- Wring excess water out of the sponge or cloth when cleaning area of the controls, or any electrical parts.
- Wash the outside cabinet with warm water and mild liquid detergent. Rinse and wipe dry with a clean soft cloth.
- Dust the front grill and back of the unit twice yearly. Make sure the power is off before cleaning.
- It is recommended to clean the unit completely inside and out yearly to maximize the longevity of the product.

Moving your wine unit:

- Remove all bottles and any other items you may have inside the unit.
- Securely tape down all loose items (shelves) inside your appliance and tape the door shut.
- Turn the adjustable leg up to the base to avoid damage.
- Be sure the appliance stays secure in the upright position during transportation.
- Protect the outside of the appliance with a blanket or similar item.

Troubleshooting

There are many common issues you may experience with you wine unit that can be solved very easily, without the need of a service call. Try the tips below to troubleshoot your unit should you experience and problems:

PROBLEM	POSSIBLE CAUSE
Wine cellar does not operate	Not plugged in or the appliance is turned off The circuit breaker tripped or a fuse has blown out
Wine cellar is not cold enough	Check the temperature control setting External environment may require a higher setting The door is opened too often The door is not closed completely The door gasket is not sealing properly
Wine cellar is turning on and off frequently	The room temperature is hotter than normal. The door is opened too often. The door is not closed completely. The temperature control is not set correctly. The door gasket does not seal properly.
The light does not work	Not plugged in. The circuit breaker tripped or a fuse has blown. The light bulb has burned out. The light button is “OFF”.
Vibrations	Check to assure that the wine unit is on a level surface.
The wine cellar seems to make too much noise	A faint humming noise may come from the flow of the refrigerant, which is normal. As each cycle ends, you may hear gurgling sounds caused by the flow of refrigerator in your wine unit. Contraction and expansion of the inside walls may cause popping and crackling noises. The wine unit is not on a level surface.
The door will not close properly	The unit is not on a level surface. The gasket is dirty. The shelves are out of position.

Technical Specifications

Wine Bottle Capacity	Up to 55 Wine Bottles
Dimensions	33” H x 222” W x 21.625” D (24“ w/ handle)
Weight	82.3 lbs.
Voltage / Frequency	115v / 60 Hz
Running Amps	1.30A
Operating Temperature	41°F - 64°F
Ambient Temperature	32°F – 100°F

Warranty Information

WHAT IS COVERED LIMITED ONE-YEAR WARRANTY:

For one year from the date of purchase by the original owner, Allavino will, at its option, repair or replace any part of the unit, which proves to be defective in material or workmanship under normal use. During this period Allavino will provide all parts and labor necessary to correct such defects free of charge, so long as the unit has been installed and operated in accordance with the written instructions in this manual. Allavino will provide you with a reasonably similar replacement product that is either new or factory refurbished. In rental or commercial use, the warranty period is 90 days. All Allavino Appliances of 3.5 cubic feet capacity or less must be brought/sent to the appliance service shop for repair.

LIMITED SECOND THROUGH FIFTH YEAR WARRANTY:

For the second through the fifth year from date of original purchase, Allavino Products will provide a replacement compressor free of charge due to a failure. You are responsible for the service labor and freight charges. In rental or commercial use, the limited compressor warranty is one year and nine months. Cost to move the appliance to the servicers' shop and back to the user's home, as may be required, are the user's responsibility.

WHAT IS NOT COVERED:

- Content losses of food or other, due to spoilage.
- Incidental or consequential damages.
- Parts and labor costs for the following will not be considered as warranty:
    - Door springs, and/or frames.
    - Inner door panels, door rails and/or door supports.
    - Light bulbs and/or plastic housing.
    - Plastic cabinet liners.
    - Punctured evaporator that voids the warranty on the complete sealed system.
    - Repairs performed by unauthorized servicers.
    - Shipping and handling costs associated with the replacement of the unit.
    - Service calls that do not involve defects in material or workmanship such as customer education, door reversal, or proper installation.
    - Surcharges including, but not limited to, any after hour, weekend, or holiday service calls, tolls, ferry trip charges, or mileage expense for service call to remote areas, including the State of Alaska.
    - Service calls that are related to external problems, such as abuse, misuse, inadequate electrical power, accidents, fire, floods, or acts of God.
    - Replacement of house fuses or resetting circuit breakers.
- Failure of the product if it is used for other than its intended purpose.
- This warranty does not apply outside the Continental USA.

SERVICE FOR YOUR WINE UNIT:
With the purchase of your Allavino appliance, you can have the confidence that if you ever need additional information or assistance, the Allavino Customer Service team will be here for you. Whatever your questions are about our products, help is available. Just call us toll-free.

ALLAVINO PRODUCT CUSTOMER SERVICES:
Product Information, Part Orders and In-Home Repair Service: **888-980-4809**

ALLAVINO
8520 Miralani Dr., San Diego, CA 92126
www.allavino.com 1.888.980.4809