SUMMIT

REFRIGERATOR-FREEZER

Model Number : CP96



AjMadison
Your Appliance Authority™
800-570-3355

INSTRUCTION MANUAL

BEFORE USE, PLEASE READ AND FOLLOW ALL SAFETY RULES AND OPERATING INSTRUCTIONS.

Write Serial Number (on back of unit) here:

_____

Felix Storch, Inc
Summit Appliance Division
770 Garrison Avenue
Bronx, New York 10474
www.summitappliance.com

Table of Contents

Important Safeguards ..... **2 - 3**

Location of Parts **4**

Installation Instructions ..... **4 – 7**

1. Before using your appliance 4
2. Installing your appliance ..... 4 – 5
3. Reversing the door swing ..... 5 – 7
4. Electrical connection 7

Operation ..... **8 - 9**

1. Power On 8
2. Thermostat 8
3. Ice making 8
4. Refrigerator compartment 8
5. Freezer 9
6. How to store foods 9

Cleaning and Maintenance ..... **9 - 10**

1. Defrosting 9
2. Cleaning 9
3. Replacing the light bulb 10
4. Turning off the unit 10

Troubleshooting **11**

1. Troubleshooting guide
2. Normal operation

Circuit Diagram **12**

Disposal Instructions **12**

Limited Warranty **13**

FJMadison Your Appliance Authority™ 800-570-3355

IMPORTANT SAFEGUARDS

Before the refrigerator/freezer is used, it must be properly positioned and installed as described in this manual, so read the manual carefully. To reduce the risk of fire, electrical shock or injury when using this appliance, follow basic precautions, including the following:



- Plug into a grounded 3-prong outlet, do not remove grounding prong, do not use an adaptor and do not use an extension cord.
- It is recommended that a separate circuit, serving only your refrigerator, be provided. Use receptacles that cannot be turned off by a switch or pull chain.
- Never clean refrigerator parts with flammable fluids. These fumes can create a fire hazard or explosion. Also, do not store or use gasoline or other flammable vapors and liquids in the vicinity of this or any other appliance. The fumes can create a fire hazard or explosion.
- Before proceeding with cleaning and maintenance operations, unplug the refrigerator or disconnect power. Failure to do so can result in electrical shock or death.
- Do not connect or disconnect the electric plug when your hands are wet.
- If the supply cord is damaged, it must be replaced by the manufacturer, its service agent or similarly qualified persons in order to avoid hazard.
- Do not attempt to repair or replace any part of your refrigerator unless it is specifically recommended in this manual. All other servicing should be referred to a qualified technician.
- ***DANGER:*** *Risk of child entrapment!*
  Child entrapment and suffocation are not problems of the past. Junked or abandoned appliances are still dangerous, even if they will "just sit in the garage a few days."
  - √ Before you throw away your old refrigerator or freezer, take off the doors. Leave the shelves in place so that children may not easily climb inside.
  - √ Never allow children to operate, play with or crawl inside the refrigerator.



- Use two or more people to move and install the refrigerator. Failure to do so can result in back or other injury. When moving the appliance, do not tilt it beyond 45° from the upright position.

AjMadison
Your Appliance Authority™
800-570-3355

- To ensure proper ventilation for your refrigerator, the front of the unit must be completely unobstructed. Choose a well-ventilated area with temperatures above 60°F (16°C) and below 90°F (32°C). This unit must be installed in an area protected from the elements such as wind, rain, water spray or drips.
- The refrigerator should not be located next to ovens, grills or other sources of high heat.
- The refrigerator must be installed with an electrical connection in accordance with state and local codes. A standard electrical supply (115-120V AC only, 60 Hz), properly grounded in accordance with the National Electrical Code and local codes and ordinances is required.
- If there is a sudden power outage, allow at least 5 minutes before re-powering the unit, in order to protect the compressor.
- Do not kink or pinch the power supply cord of the refrigerator.
- The fuse (or circuit breaker) size should be 15 amps.
- It is important for the refrigerator to be leveled in order to work properly. You may need to make several adjustments to level it.
- Do not overfill, to allow for free circulation of air.
- To avoid damaging your fingers, do not touch frozen food with wet hands.
- If the appliance will not be used for a long time, it should be turned off.
- Do not use mechanical devices or other means to accelerate the defrosting process.
- Do not damage the refrigerant coils.
- Do not use electric appliances inside the food storage compartments of appliance, unless they are of the type recommended by the manufacturer.
- Do not use solvent-based cleaning agents or abrasives on the interior. These cleaners may damage or discolor the interior.
- This appliance is not intended for use by young children or infirm persons without supervision.
- This appliance is not intended for use by young children or infirm persons without supervision.
- This appliance is intended for household use, and should not be used for any other purpose.

CAUTION: THIS APPLIANCE IS NOT DESIGNED FOR THE STORAGE OF MEDICINE OR OTHER MEDICAL PRODUCTS.

SAVE THESE INSTRUCTIONS

AJMadison Your Appliance Authority™ 800-570-3355

Location of Parts

1. Top cover
2. Wire shelf of freezer compartment
3. Thermostat
4. Glass shelf
5. Crisper cover
6. Crisper
7. Adjustable leg
8. Long rack
9. Short rack
10. Bottle rack

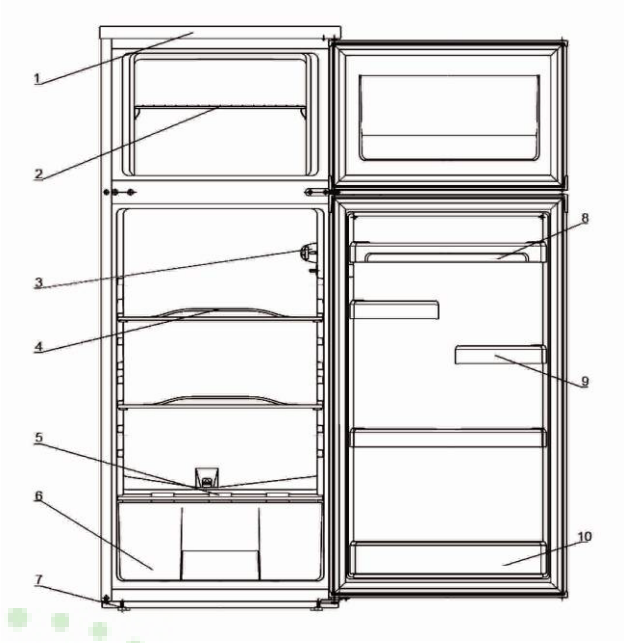

INSTALLATION INSTRUCTIONS

1. Before using your appliance

a. Remove the exterior and interior packing, including the foam base and all adhesive tape. To remove any remaining tape or glue, rub the area briskly with your thumb. Tape or glue residue can also be easily removed by rubbing a small amount of liquid dish soap over the adhesive with your fingers. Wipe with warm water and dry.

b. Do not use sharp instruments, rubbing alcohol, flammable fluid or abrasive cleaners to remove tape or glue. These products can damage the surface of your refrigerator.

c. When moving the appliance, do not tilt it more than 45° from the upright position.

d. Before connecting the appliance to the power source, let it stand upright for approximately 30 minutes. This will reduce the possibility of a malfunction in the cooling system from handling during transportation.

e. Clean the interior surfaces with lukewarm water using a soft cloth.

2. Installing your appliance

WARNING: Keep flammable materials and vapors such as gasoline away from the refrigerator.

- Place your appliance in a well-ventilated area on a floor that is strong enough to support it when fully loaded. To level your appliance, adjust the leg at the front of the appliance.

AjMadison
Your Appliance Authority
800-570-9355

- To ensure proper ventilation for your refrigerator, leave not less that 12” of space at the top and 4" on both sides and the back.
- If you are installing the refrigerator next to a fixed wall, leave sufficient space on the hinge side to allow for the door to swing open at least 120°.
- Locate the appliance away from direct sunlight and sources of heat (stove, heater, radiator, etc.). Direct sunlight can affect the refrigerator's coating and heat sources can increase electrical consumption. Extremely cold ambient temperatures may also cause the appliance to perform improperly.
- Avoid locating the appliance in moist areas. Too much moisture in the air can promote rusting and will cause frost to form quickly on the evaporator, requiring more frequent defrosting of the appliance.
- Never place any weight on the electrical cord.

3. Reversing the door swing

1. Remove the decorative caps and undo the screws in the top cover and then take off the top cover.

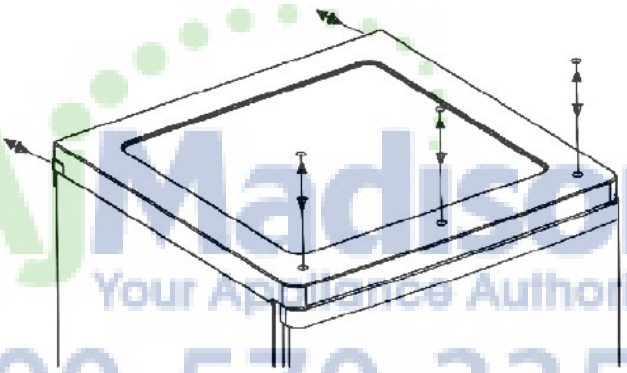

AjMadison
Your Appliance Authority™
800-570-3355

2. Remove the top hinge pin and inside spring and slide the upper door up, lifting it away from the appliance.

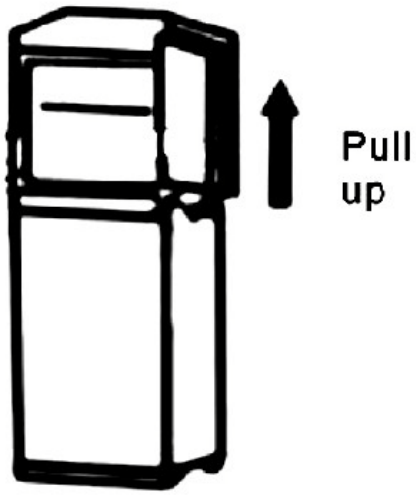

3. Remove the middle hinge and then slide the lower door up and lift away from the appliance.

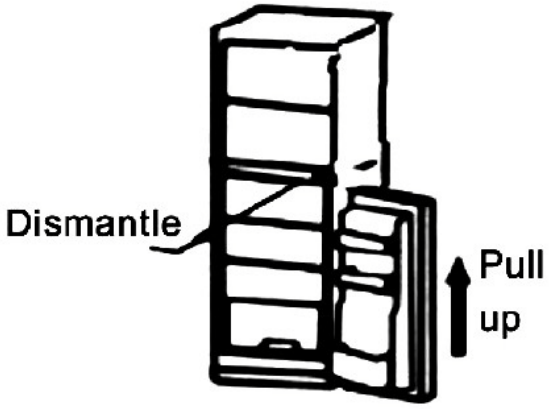

4. Undo the screws and remove the lower hinge from the base and then refit the hinge to the opposite side.

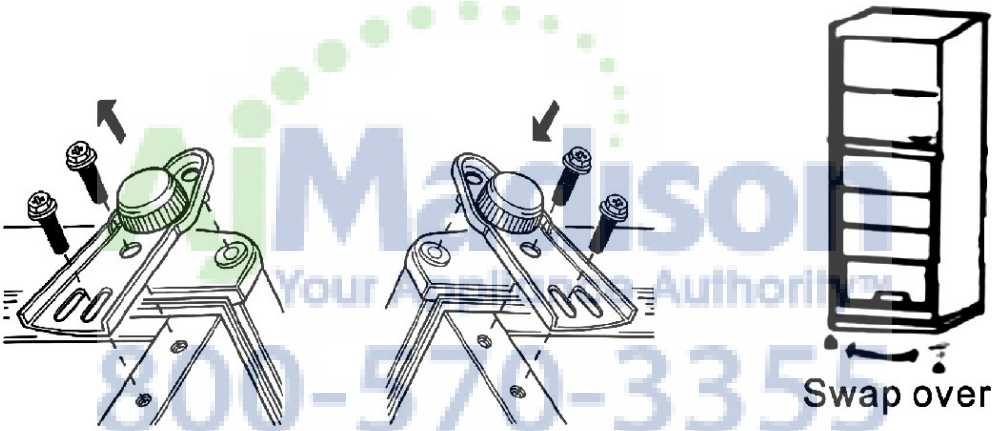

AjMadison
Your Appliance Authority™
800-570-3355

5. Set the refrigerator door in place first and screw the middle hinge on the opposite side.

NOTE: Ensure the door is aligned horizontally and vertically and the seal is closed on all sides before finally tightening the lower hinge and middle hinge.

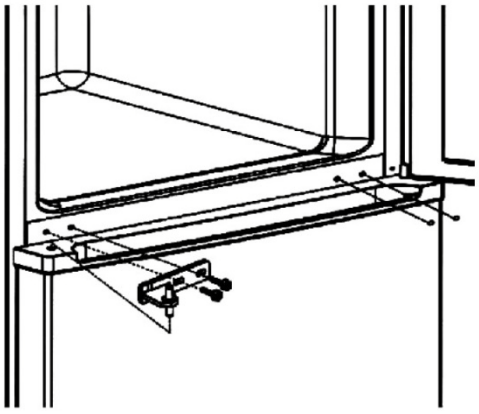

6. Set the freezer door in place, and finally refit the top cover.

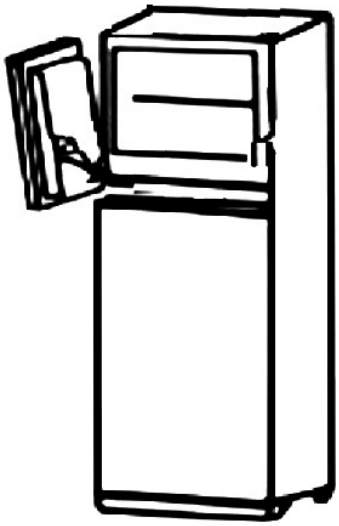

4. Electrical connection

Warning

Improper use of the grounded plug can result in the risk of electrical shock. If the power cord is damaged, have it replaced by an authorized service technician.

AjMadison
Your Appliance Authority™
800-570-3355

- This appliance should be properly grounded for your safety. The power cord of this appliance is equipped with a three-prong plug which mates with standard three-prong wall outlets to minimize the possibility of electrical shock.
- Do not under any circumstances cut or remove the third ground prong from the power cord supplied.
- Plug the appliance into an exclusive, properly installed, grounded wall outlet. Any questions regarding power and/or grounding should be directed toward a certified electrician or an authorized Summit service center.
- It is recommended that a separate circuit serving only this appliance be provided. Use a receptacle that cannot be turned off with a switch or pull chain.
- The use of extension cords is strongly discouraged.
- This appliance requires a standard 115/120-volt, 60 Hz electrical outlet with three-prong ground and a 15-amp fuse. To prevent accidental injury, the power cord should be secured behind the appliance and not left exposed or dangling.

NOTE: Before performing any type of installation, cleaning or removing a light bulb, turn the thermostat control to **0** (OFF) and then disconnect the unit from the electrical power source. When you are finished, reconnect the refrigerator to the power source and reset the temperature control to the desired setting.

Operation

After cleaning the appliance and allowing it to stand for at least 30 minutes, you can connect it to a 115-120V AC, 60 Hz power source.

1. **Power On**
   a. Once the unit is connected to the power source, turn the thermostat knob to a setting between **1** and **5**. The appliance starts.
   b. Close the door for several minutes, and then touch the right and left sides of the refrigerator. You will feel them getting warm.
   c. After 30 minutes, the refrigerator's interior will be cold. This means that the compressor system is working properly. Use the thermostat to set the desired temperature.

2. **Thermostat**

   There is one control for the refrigerator and freezer and it is located on the right inner wall of the refrigerator compartment, above the top shelf. When you first turn on your refrigerator, set the thermostat knob at **3**. Give your refrigerator time to cool down completely before using it. It is best to wait 24 hours before adding food.

   The thermostat knob controls the temperature. The higher the number setting, the longer the compressor will run and the colder the resulting temperature.

   When the thermostat is set to **0** (OFF), the refrigerator is not running.

   NOTES:

   - Turning the temperature control to the **0** position stops the cooling cycle but does not shut off the power to the appliance.
   - If the unit is unplugged, has lost power, or is turned off, you must wait 3 to 5 minutes before restarting the unit. If you attempt to restart before this time delay, the unit will not start.
   - Setting **5** is suitable for fast freezing or when the refrigerator is being stocked with a large quantity of room-temperature food. After fast freezing, don't forget to turn the thermostat back to its normal level. Setting **5** is not normally chosen because it can cause freezing in the refrigerator compartment.

3. **Ice making**

   Pour cold water into an ice cube tray, filling it 4/5 deep. Be sure the bottom of the tray is dry, then put it into the freezer compartment.

4. **Refrigerator compartment**

   The refrigerator compartment can hold temperatures between 32º and 50ºF (0º to 10ºC). It is suitable for keeping fruits, vegetables, leftovers, beverages, etc., fresh for a period of up to several days. Wrap food to be stored in the refrigerator in airtight and moisture-proof material. This prevents food odor and taste transfer within the refrigerator.

AjMadison
Your Appliance Authority™
800-570-3333

5. **Freezer**
   - Freezer temperature is below 32°F (0°C). It is suitable for keeping fish, meat, frozen dinners, etc. stored for extended periods of time.
   - Mark packages with the following data: Kind and amount of food and date of loading.
   - It is most important that the food be frozen as quickly as possible.
   - Never put bottled food or drinks in the freezer compartment.

6. **How to store foods**
   - When storing foods, store them covered so they will not be affected by other foods smells.
   - If the food can be cleaned, wash and dry it before storage.
   - Store foods in closed containers, leaving enough space around them to allow for the flow of cold air.
   - Don't overload either the refrigerator or the freezer compartment.
   - Wait until hot food reaches room temperature before placing it in the refrigerator.
   - To avoid losing cold air, do not open and close the doors any more than necessary, and do not keep the doors open for extended periods of time.
   - The refrigerator door allows for the storing of beverage cans.

AjMadison
Your Appliance Authority™
800-570-3355

Cleaning and Maintenance

1. **Defrosting**

   The freezer must be manually defrosted. This should be done when frost is more than ¼" (5mm) thick.

   a. Power off the refrigerator, open the door and remove all food to a cool space.
   b. Remove the freezer shelf.
   c. Remove ice and frost, or let it melt naturally.
   d. Clean up the remaining water with a clean soft cloth.
   e. Put the food back inside the freezer. Power on again.

   NOTE: If you want to speed up the defrosting process, put a bowl of hot water on the rack and close the door. Do not use metal tools or electric heaters to help defrost. This may damage the evaporator.

2. **Cleaning**

   The inside of the refrigerator should be cleaned often.

   a. Power off the appliance
   b. Use a soft towel with water or mild, non-abrasive cleanser to scrub away any food residue.
   c. Wipe with a soft, dry cloth.

   NOTE: Do not pour water onto the outer walls of the refrigerator, since this will affect the insulation. Do not use hot water, acid, alkali, gasoline, benzene, caustic cleanser, alcohol, or hard brushes to clean the plastic parts.

3. Replacing the light bulb

a. Turn the thermostat to the OFF position **0** and disconnect from the electrical power supply.
b. Remove all food from the top shelf of the refrigerator and pull the shelf forward slightly.
c. The bulb is located in the back of the thermostat housing. Remove the plastic cover by pressing the front center while pulling upwards on the small rim on the bottom.
d. Unscrew the bulb and screw a new bulb into the lamp socket until tight.
e. Replace the cover, pressing firmly.
f. Set the thermostat to your preferred setting and close the door.
g. If the power cable is damaged, ask an authorized service representative to replace it.

4. Turning off the unit

If possible, avoid turning off the refrigerator. Let it work for long periods of time, even if there is no food being stored. This will help keep the appliance working properly for a long time.

If you must turn it off and not use it for a long period of time, turn the thermostat knob to **0** (OFF) and unplug the appliance. Follow the information above for cleaning it and keep it in a dry, clean place. Store the refrigerator with the doors slightly open to reduce the formation of mold and to prevent the door gaskets from sticking to the cabinet.

AllMedicon
Your Appliance Authority™
800-570-3355

Troubleshooting

If your appliance is not working normally, you may be able to avoid the cost of a service call by checking the following list of common problems:

1. Troubleshooting guide

Problem	Possible cause
Unit stops working.	Thermostat is set at **0** (OFF). Power plug is not firmly set in socket. Fuse or circuit breaker needs replacement or resetting. Power is off. You have tried to restart the unit after a power loss without waiting 5 minutes.
Compressor is not working (unit is not cooling).	Thermostat is set too high. Doors are not completely closed. Room temperature is too high, or unit is in direct sunlight. The refrigerator is overloaded with food, hampering cold air flow. Food was put into the unit before being allowed to cool down.
Food does not get cold.	Thermostat is set too low. There is too much food in the appliance. The door is not closed, or is opened too frequently. The appliance to too close to a heat source.
Food in the refrigerator is frozen.	The thermostat setting is too high. The food was placed near the evaporator.
Appliance is noisy.	The base was not removed. The unit was not leveled. The back of the appliance is touching the wall.
Touching the unit causes an electric shock.	The unit is not grounded properly. If grounding is OK, turn off and disconnect the appliance and call our service department.

If your appliance is still not working, please contact an authorized service dealer or call our service department at **1-800-932-4267**.

2. Normal operation

The following items do not indicate a problem with the appliance; they are part of normal operation:

- If there is a sound like water flowing, this is the compressor operating.
- If you hear a pinging sound, it is caused by the sudden change of temperature making metallic material in the unit expand or contract.
- The compressor is hot. (When the compressor is working, it can reach a temperature of 194°F, or 90°C.)
- The exterior sides of the refrigerator are hot. (The two sides can reach a temperature of 131°F, or 55°C.)
- The exterior of the refrigerator shows condensation. This is caused by a high level of humidity. Dry the surfaces with a clean, soft cloth.

AjMadison Your Appliance Authority™ 800-570-3355

Circuit Diagram

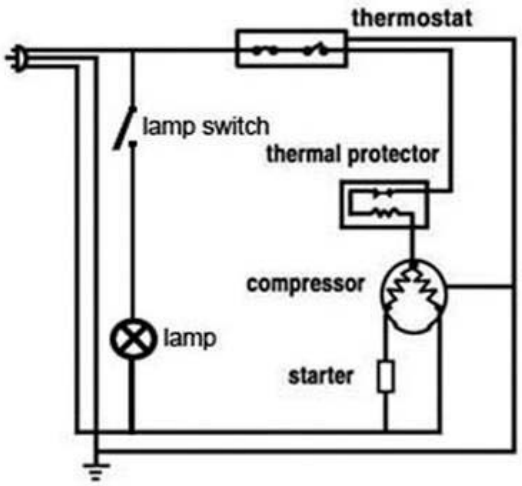

Disposal Instructions

In the event of the unit being damaged beyond repair, please dispose of it according to local regulations for the disposal of appliances.

Please take off the doors before you discard the appliance, to prevent children from being trapped inside.

Under no circumstances may the unit be dumped.

AjMadison
Your Appliance Authority
800-570-3355

Limited Warranty

ONE-YEAR LIMITED WARRANTY

Within the 48 contiguous United States, for one year from the date of purchase, when this appliance is operated and maintained according to instructions attached to or furnished with the product, warrantor will pay for factory-specified parts and repair labor to correct defects in materials or workmanship. Service must be provided by a designated service company. Outside the 48 states, all parts are warranted for one year from manufacturing defects. Plastic parts, shelves and cabinets are warranted to be manufactured to commercially acceptable standards, and are not covered from damage during handling or breakage.

5-YEAR COMPRESSOR WARRANTY

1. The compressor is covered for 5 years.
2. Replacement does not include labor.

ITEMS WARRANTOR WILL NOT PAY FOR:

1. Service calls to correct the installation of your appliance, to instruct you how to use your appliance, to replace or repair fuses or to correct wiring or plumbing.
2. Service calls to repair or replace appliance light bulbs or broken shelves. Consumable parts (such as filters) are excluded from warranty coverage.
3. Damage resulting from accident, alteration, misuse, abuse, fire, flood, acts of God, improper installation, installation not in accordance with electrical or plumbing codes, or use of products not approved by warrantor.
4. Replacement parts or repair labor costs for units operated outside the United States.
5. Repairs to parts or systems resulting from unauthorized modifications made to the appliance.
6. Expenses for travel and transportation for product service in remote locations.
7. The removal and reinstallation of your appliance if it is installed in an inaccessible location or is not installed in accordance with published installation instructions.

DISCLAIMER OF IMPLIED WARRANTIES – LIMITATION OF REMEDIES

CUSTOMER'S SOLE AND EXCLUSIVE REMEDY UNDER THIS LIMITED WARRANTY SHALL BE PRODUCT REPAIR AS PROVIDED HEREIN. IMPLIED WARRANTIES, INCLUDING WARRANTIES OF MERCHANTABILITY OR FITNESS FOR A PARTICULAR PURPOSE, ARE LIMITED TO ONE YEAR. WARRANTOR SHALL NOT BE LIABLE FOR INCIDENTAL OR CONSEQUENTIAL DAMAGES. SOME STATES DO NOT ALLOW THE EXCLUSION OR LIMITATION OF INCIDENTAL OR CONSEQUENTIAL DAMAGES, OR LIMITATIONS ON THE DURATION OF IMPLIED WARRANTIES OF MERCHANTABILITY OR FITNESS, SO THESE EXCLUSIONS OR LIMITATIONS MAY NOT APPLY TO YOU. THIS WARRANTY GIVES YOU SPECIFIC LEGAL RIGHTS AND YOU MAY ALSO HAVE OTHER RIGHTS, WHICH VARY FROM STATE TO STATE.

WARNING! This product may contain chemicals known to the state of California to cause cancer or birth defects or other reproductive harm. For more information, visit: www.summitappliance.com/prop65

Chemicals known by the manufacturer to be present in this product in concentrations higher than threshold limits: NONE.

FELIX STORCH, INC.
770 Garrison Avenue
Bronx, NY 10474
Phone: (718) 893-3900
Fax: (718) 842-3093
www.summitappliance.com

SUMMIT

For parts and accessory ordering, troubleshooting and helpful hints, visit:
www.summitappliance.com/support

Printed in China