FISHER & PAYKEL

ACTIVESMART™ REFRIGERATOR

ICE & WATER, AUTOMATIC ICE AND NON-ICE & WATER MODELS

RF523G & RF523M models

USER GUIDE

NZ AU

CONTENTS

Introduction	**3**
Safety and warnings	**4**
Installation instructions	**9**
ActiveSmart™ special features	**19**
SmartTouch control panel	19
External display	20
Humidity control system	20
ActiveSmart™ operating instructions	**21**
Temperature control	21
Door alarms	22
Alarm Mute	22
Key Mute	22
Key Lock	22
Sabbath mode activation	23
Using your water dispenser	23
Water filter	24
Using your ice maker	25
Bottle Chill	27
Fast Freeze	27
Ice boost function	27
Manual ice system	28
Cleaning and caring for your refrigerator	**30**
Exterior	30
Interior	32
Storing food in your refrigerator	**35**
Storing food in your freezer	**37**
Defrosting food in your refrigerator	**39**
Moving or storing your appliance	**40**
ActiveSmart™ sounds	**41**
Normal refrigerator sounds	**41**
Troubleshooting	**42**
Manufacturer's Service & Warranty	**47**

IMPORTANT!
SAVE THESE INSTRUCTIONS

The models shown in this user guide may not be available in all markets and are subject to change at any time. For current details about model and specification availability in your country, please go to our website fisherpaykel.com or contact your local Fisher & Paykel dealer.

Note that the word 'refrigerator', throughout this user guide, refers to the combination of refrigerator/freezer products.

Registration

Register your product with us so we can provide you with the best service possible.

To register your product visit our website: fisherpaykel.com

INTRODUCTION

Thank you for buying a Fisher & Paykel ActiveSmart™ refrigerator.

At Fisher & Paykel, we are very proud of this refrigerator. This refrigerator combines size and storage space with the latest features and functions.

Thousands of hours of food care research and refrigeration experience has been programmed into your refrigerator to give you the best possible performance.

We hope you enjoy your new refrigerator.

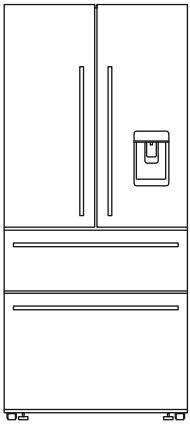

French Door

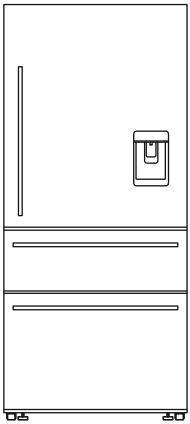

Single Door

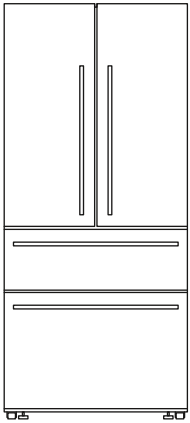

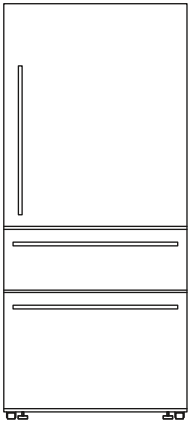

⚠ WARNING!	
	**Electric Shock Hazard** **Read and follow the safety and warnings outlined in this User guide before operating this appliance.** **Failure to do so can result in death, electric shock, fire or injury to persons.**

⚠ WARNING!	
	**This appliance is top-heavy and must be secured to prevent the possibility of tipping forward.** **To ensure that the appliance is stable under all loading conditions, the anti-tip bracket and fittings supplied must be installed according to the following installation instructions by a professional installer.**

 **R600a**	**This refrigerator contains flammable refrigerant isobutane (R600a).**

Use this appliance only for the intended purpose as described in the user guide.

IMPORTANT SAFETY INSTRUCTIONS

WARNING!

When using this appliance always exercise basic safety precautions including the following:

- **Children should be supervised to ensure that they do not play with the appliance.**

- **Cleaning and user maintenance shall not be made by children without supervision.**
- **This appliance can be used by children aged from 8 years and above and persons with reduced physical, sensory or mental capabilities or lack of experience and knowledge if they have been given supervision or instruction concerning use of the appliance in a safe way and understand the hazards involved.**
- **The manufacturer's installation instructions for product and cabinetry ventilation must be followed when installing the appliance.**
- **To avoid hazard due to instability of the appliance, it must be fixed in accordance with installation instructions.**
- **WARNING: Keep ventilation openings, in the appliance enclosure or the built-in structure, clear of obstruction.**
- **WARNING: Do not use mechanical devices or other means to accelerate the defrosting process, other than those recommended by the manufacturer.**
- **WARNING: Do not damage the refrigerant circuit.**
- **In case of damage to the refrigerant circuit, ventilate the area by opening all windows. Do not operate electrical equipment or any other equipment that may produce arcs, sparks or flames in the area. Contact your Fisher & Paykel trained and supported service technician immediately to arrange for the appliance to be repaired.**
- **It is hazardous for anyone other than an authorised service person to service this appliance. In Queensland the authorised service person must hold a gas work licence or authorisation for hydrocarbon refrigerants to carry our service or repairs which involve removal of covers.**

Electrical

- **This appliance must be installed in accordance with the installation instructions before use.**
- **To allow disconnection of the appliance from the supply after installation, incorporate a switch in the fixed wiring in accordance with the wiring rules**
- **Never unplug your refrigerator by pulling on the power cord. Always grip the plug firmly and pull straight out from the outlet.**
- **Do not plug in any other appliance at the same power point as your refrigerator or use extension cords or double adapters.**
- **Repair or replace immediately all electric service cords that have become frayed or otherwise damaged. Do not use a cord that shows cracks or abrasion along its length or at either the plug or appliance end.**
- **If the power supply cord is damaged, it must only be replaced by your Fisher & Paykel trained and supported service technician because special purpose tools are required.**
- **When moving your appliance away from the wall, be careful not to roll over or damage the power cord.**
- **WARNING: Do not use electrical appliances inside the food storage compartments of the appliance, unless they are of the type recommended by the manufacturer.**

IMPORTANT!

Your refrigerator is designed to operate for many years without the need for service checks. However, if your refrigerator is malfunctioning, have it attended to by your Fisher & Paykel trained and supported service technician as soon as possible.

All electrical repairs must be carried out by an adequately trained service technician or qualified electrician.

Cleaning

- **Many commercially available cleaning products contain solvents that may attack the plastic components of your refrigerator and cause them to crack.**
- **Avoid using anti-bacterial cleaning products on either the interior or exterior of the cabinet as they may cause rusting of metal components and cracking of plastic components.**
- **Please refer to the 'Cleaning and caring for your refrigerator' section of this user guide for further information.**

Disposal

- **Extreme care must be taken when disposing of your old appliance to avoid hazards:**
  - **The flammable refrigerant gas must be safely removed.**
  - **The thermal insulation foam in this appliance contains flammable insulation blowing gases, any exposed foam may be highly flammable and must be carefully treated during disposal.**
  - **The doors and panels should be removed and the shelves left in place so that children may not easily climb inside.**
- **Your Fisher & Paykel trained and supported service technician will be able to give advice on environmentally friendly methods of disposing of your old refrigerator or freezer.**

Storing food and drinks

- **Do not store explosive substances such as aerosol cans with a flammable propellant in this appliance.**
- **Never store volatile or flammable materials in your refrigerator as they may explode.**
- **Never freeze liquids in glass containers. Liquid expands during freezing, which may cause the container to explode.**
- **Never freeze carbonated drinks. They may explode.**
- **Do not consume food if it is too cold. Food removed from the freezer compartment may be cold enough to cause damage when brought into contact with bare skin, eg frozen ice cubes.**

Power failure — food safety

- **Do not refreeze frozen foods that have thawed completely. The food may be dangerous to eat. Follow the recommendations below if you discover food in your freezer has thawed:**
  - **Ice crystals still visible — food may be refrozen but should be stored for a shorter period than recommended.**
  - **Thawed but refrigerator cold — refreezing generally not recommended. Fruits and some cooked food can be refrozen but use as soon as possible. Meat, fish, poultry — use immediately or cook then refreeze. Vegetables — discard as they usually go limp and soggy.**
  - **Thawed and warmer than 5°C — discard all food.**

Please follow the installation steps below to ensure your appliance operates correctly.

Before installation

Power

- Install your appliance where the plug is easily accessible.
- Connect your refrigerator to a separate power point. Avoid sharing the power point with other appliances. Do not use extension cords and double adaptors as the combined weight of two power cords can pull the double adaptor from the power outlet.
- For power requirements, refer to the information on the serial plate located at the front bottom right-hand side of the refrigerator when the door is open.
- Ensure your appliance is properly grounded (earthed).
- Connect the appliance to the electrical supply (220V – 240V 50Hz) with the fitted plug and lead.
- Connections to the mains supply should be in accordance with local regulations.

Location

- Do not place your refrigerator in direct sunlight or beside any heat generating appliance such as a cooktop, oven or dishwasher.

Ice & Water and Automatic Ice models

- Your Ice & Water and Automatic Ice refrigerator must be installed by an authorised plumber or Fisher & Paykel trained and supported service technician as incorrect plumbing can lead to water leaks.
- Fisher & Paykel Appliances does not accept responsibility for damage (including water damage) caused by faulty installation or plumbing.

Product and cabinetry dimensions

RF523G

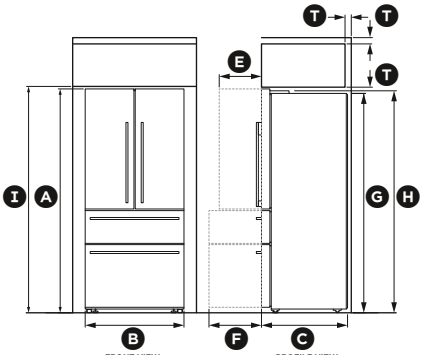

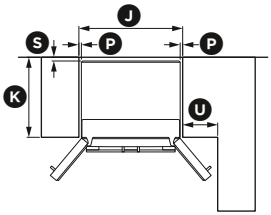

Flush with refrigerator chassis — full door rotation

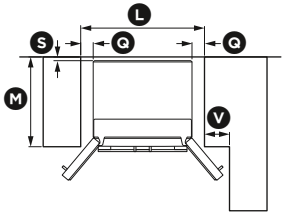

Flush with refrigerator door — full door rotation

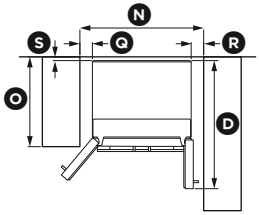

Flush with refrigerator door — 90° door rotation

RF523M

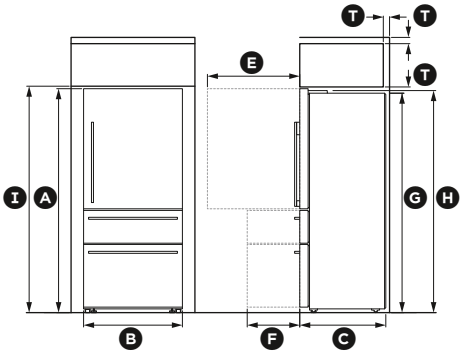

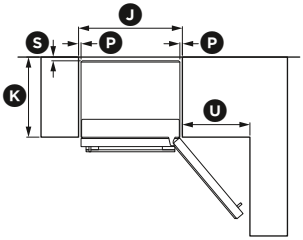

Flush with refrigerator chassis — full door rotation

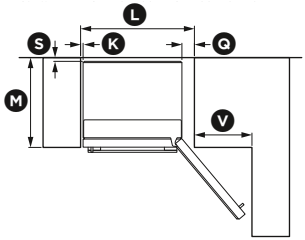

Flush with refrigerator door — full door rotation

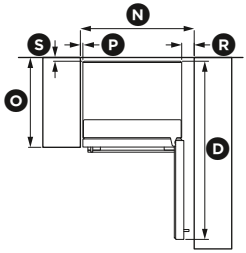

Flush with refrigerator door — 90° door rotation

	RF523G	RF523M
PRODUCT DIMENSIONS	**mm**	**mm**
Ⓐ Overall height of product	1790	1790
Ⓑ Overall width of product	790	790
Ⓒ Overall depth of product (excludes handle)	688	688
Ⓓ Depth with door open — from rear of fridge — 90° rotation	1026	1426
Ⓔ Depth with door open — from flush with door — 90° rotation	338	738
Ⓕ Depth of open drawer — from flush with door (excludes handle)	420	420
Ⓖ Height to top of chassis	1754	1754
Ⓗ Height to top of hinge cover	1775	1775
CABINETRY DIMENSIONS (including minimum air clearances)	**mm**	**mm**
Ⓘ Inside height of cavity	1810	1810
Flush with refrigerator chassis — full door rotation		
Ⓙ Inside width	830	830
Ⓚ Inside depth	640	640
Flush with refrigerator door — full door rotation		
Ⓛ Inside width	990	910
Ⓜ Inside depth flush to flat door	718	718
Flush with refrigerator door — 90° door rotation (for full drawer/shelf access, the doors need to be open past 90°)		
Ⓝ Inside width	990	910
Ⓞ Inside depth flush to flat door	718	718
MINIMUM CLEARANCES	**mm**	**mm**
Ⓟ Side clearance	20	20
Ⓠ Side clearance — hinge side flush with door — full rotation	100	100
Ⓡ Side clearance — hinge side flush with door — 90° rotation	100	100
Ⓢ Rear clearance	30	30
Ⓣ Vent (above refrigerator cabinet or around top of cupboard)	50	50
Ⓤ Door clearance — hinge side flush with chassis — full rotation	280	540
Ⓥ Door clearance — hinge side flush with door — full rotation	200	460

Installing your anti tip bracket

CAUTION!

Failure to install the anti-tip bracket as per below instructions can result in serious injury or death.

Anti-tip bracket fittings – Included with your refrigerator.

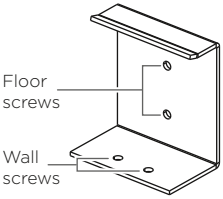

Anti-tip bracket (2)

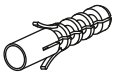

Masonry plug (4)

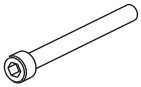

M6 x 60 cap screws (2)

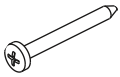

#10 x 40 pan head Phillips screw (4)

Determine the location of your refrigerator

Refrigerator located in a cavity:

- The brackets should be offset from the side of the refrigerator by 20mm.

Refrigerator not in a cavity:

- Brackets can be installed flush with the side of the refrigerator.

Fitting the brackets

① Determine where the front of your refrigerator will sit. Mark this on the floor and measure back towards the wall 678mm. This will determine where the front edge of the bracket should be placed (refer to **A**).
   - The distance between the wall and the back of the refrigerator must be a minimum of 45mm and a maximum of 60mm. If the distance is greater than 60mm, use a spacer between the bracket and wall (refer to **B**).

② Determine if you are fitting the bracket to the wall or floor. Place the brackets in the determined location and mark the screw holes.

③ Fasten the brackets using pan head screws
   - For wood or plasterboard wall/floor, use the pan head self-tapping screw and screw into a wall/floor stud. If there is no wall/floor stud available, use a wooden spacer before using the self-tapping screws.
   - For masonry/tiled/concrete wall or floors, drill a 6mm diameter hole with 40mm depth and place the masonry anchor in the hole before you screw the bracket down.

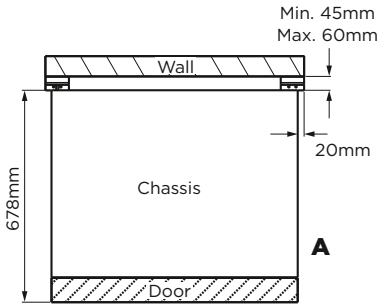

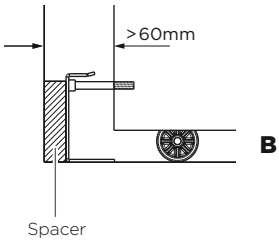

④ Locate the two holes on the rear of the refrigerator (refer to **C**). Screw in the M6 cap screws until all the thread is gone.

⑤ Move the refrigerator back towards the wall until the screw hits the back of the bracket (refer to **D**).
Note: If you want your refrigerator to sit further forward, unscrew up to 10mm of the M6 cap screw. Be careful that the screw does not miss the bracket and contact the wall.

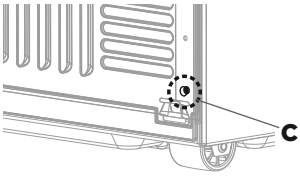

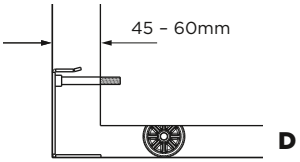

IMPORTANT!

When fastening with masonry plugs and/or screws:

- **Ensure the screws avoid electrical, gas and water conduits.**
- **Ensure the surface of the bracket is fastened to withstand a 100kg load.**
- **Ensure light-weight masonry material such as cinder block and new concrete (no curing time) are not used in installation.**
- **Do not use metallic materials that may corrode, stain and/or damage the enclosure.**

Installing your water filter (Ice & Water and Automatic Ice models)

① Open your refrigerator and locate the filter cover on the back wall, top right of your refrigerator. Pull the tab at the bottom of the cover towards you to release (refer to **A**).
  – The cover will slide down upon release.
Note: We recommend removing the top shelf if you need more space while installing the filter.

② Remove the plastic wrapping of the new filter.

③ Insert the filter into the filter head (refer to **B**).

④ Push the filter firmly all the way into the filter head then turn the filter clockwise until it locks into place (refer to **C**).
  – If the filter will not turn, ensure that the filter is pushed firmly into the filter head.

⑤ Push the entire filter back into the bracket (refer to **D**).

⑥ Push the cover up and into the slots at the top of the filter housing until it clicks and the base locks firmly into place (refer to **E**).

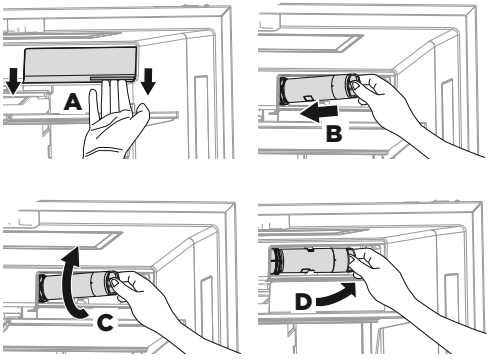

Connecting water (Water dispensing and Automatic Ice models)

1. Ensure the refrigerator is NOT plugged into a power supply. Locate the isolation tap for water connection – cold water supply only. (Tee and tap fitting not supplied).
2. Uncoil a tubing with quick fitting from the back of the refrigerator (refer to **A**).
   - The quick fitting is pre-assembled with the tubing at the factory.
3. Connect one end of a long tubing (4m) to the quick fitting, and insert the other end to a PLV (refer to **B**).
4. Insert one end of a short tubing (200mm) to the inlet of the PLV. (Refer to **C**).
   - Ensure the arrow on the PLV is pointing away from the tap. The arrow indicates the direction of water flow.
5. Insert the other end of the short tubing firmly to the tap connection. (Refer to **C**).
   - The tubing should push in at least 16mm before reaching the stop.
6. Pull gently on the short tubing to ensure it is locked in place (refer to **D**).
7. Secure the connection by attaching a locking key in between the tap connection and locking collet (refer to **E**).
8. Fasten the tap connection to the cold water supply tap. Take care not to over-tighten the tap connection (refer to **F**).
   Note: The tap connection supplied should fit most installation situations.
9. Turn isolating tap on and check that all connections are dry and free of drips.

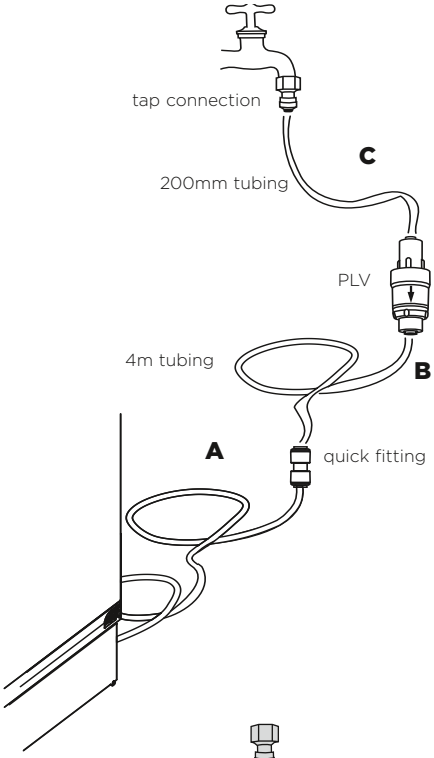



Pull gently on tubing to ensure it is locked in.

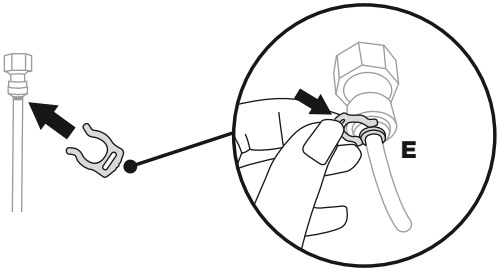

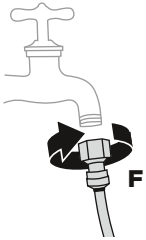

Before you start using the Ice & Water or Automatic Ice function

Before first use, you need to flush water through the filter to remove impurities or trapped air in the water tank and filter system.

For Ice & Water

- Press the water dispenser pad to dispense 4L of water.
  - Wait for 4 minutes before dispensing again.
- Dispense 4L of water and then wait for another 4 minutes.
  - There may be carbon residue dispensed together with water. This is not harmful, and is normal during the flushing process.
- Dispense another 4L of water.
  - This prevents excessive dripping of water from your dispenser.
- There may be a few drips of water coming out of the dispenser for a few days after installation. This is to clear the remaining trapped air in the dispenser.
- Ensure your refrigerator has cooled for at least 2 hours before use.

For Automatic ice model

① Press the button to turn on the ice maker. The light above the button will illuminate indicating the ice maker is on.
② Press the , − and + buttons together for 4 seconds and then close the refrigerator compartment to force an ice maker cycle. The ice tray will flip twice.
③ Repeat to force another ice maker cycle. The ice tray will flip twice and spill water into the ice bin.
④ Empty the water, dry and return the bin. Be aware that the ice tray will not flip until the refrigerator compartment door is closed.
⑤ Discard the first 3 harvests of ice (8 cubes per harvest).



Water dispenser
(Ice & Water model only)

Positioning your refrigerator (all models)

Your Fisher & Paykel ActiveSmart™ refrigerator is fitted with front and rear rollers to allow you to easily move your refrigerator forward and backward.

Avoid moving your refrigerator sideways to prevent damaging the rollers or the floor covering surface.

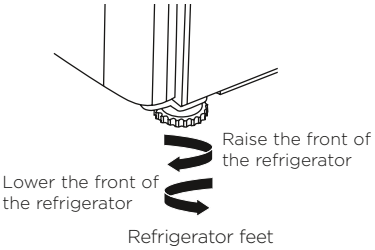

Ⓐ Your refrigerator will arrive with the front feet wound up making moving the product into its final location a simple task.
Ⓑ Roll the refrigerator into its final position making sure there is the correct air gap between the product and surrounding cabinetry. See minimum clearance in cabinetry dimensions table.
Ⓒ Adjust the front feet down until the refrigerator is leaning backward with the front approximately 10mm higher than the back. This will ensure a good door closing action.

(Non French door models only)
Ⓓ Aligning your refrigerator with cabinetry.
- Align the sides of the refrigerator with the cabinetry by adjusting the hinge side front foot.
- Adjust the handle side foot until it touches the floor and takes a small amount of weight.
- Once the refrigerator is in place and aligned with cupboards/alcove gently push on the front top and check if the product is rocking or stable.

Levelling of refrigerator doors

- Open the door that is out of alignment.
- Lift the door upwards.
- Clip the spacer onto the centre hinge pin (refer to **A**).
- Close the door to recheck alignment.

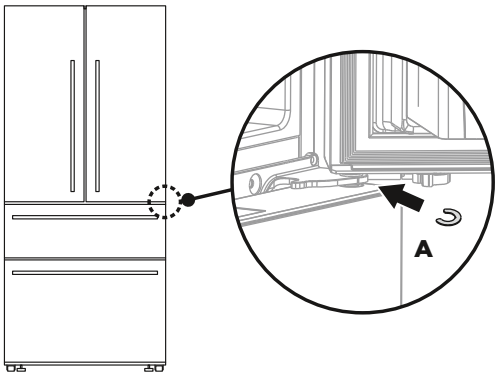

What to do if your product is unstable

Ⓐ Gently push the refrigerator back until the rear rollers contact the floor.
- Measure the gap under the front foot, which has come off the floor.
- Obtain some solid packing material (hardwood, plastic, etc) which fits firmly into the gap under the foot.

Note: Do not use metallic materials that may corrode, stain and/or damage floor coverings.

Ⓑ Wind both front feet up and roll the product out of position.
- Place the packing material in the location diagonally opposite the front roller that lifts off the floor.
- Make sure the packing material stays in place when the product is pushed back into position.
- Ideally, the packing material is large enough to rest against the back wall to prevent it from moving when the cabinet is pushed into position.

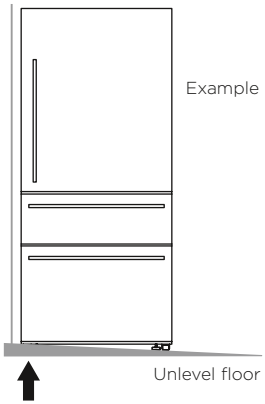

This foot lifts off the floor when top front is gently pushed back

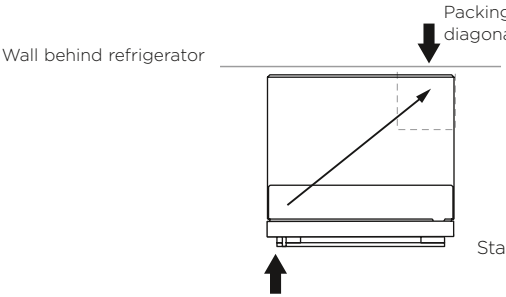

Stabilising your refrigerator

For example: if this foot lifts off the floor when pushing gently on the top front of the refrigerator

Ⓒ Roll the refrigerator back into position and adjust front feet as per page 16 step Ⓒ (check alignment and door closing action are satisfactory).
- Make small adjustments to front feet where necessary.
- Check that the product is stable (all 4 feet are on the floor). If not, repeat Ⓐ and Ⓑ.

Before placing food in the fresh food or freezer compartments

- Remove all internal packaging. Ensure that all transit clips are removed from the refrigerator. These are small rubber stoppers located at the back of the shelves.
- Clean the inside of the appliance with a mix of warm water and a small amount of liquid detergent. Use a soft cloth to remove dust collected during manufacture and transport.
- Allow the refrigerator and freezer to run empty for 2 – 3 hours to allow each compartment to cool to the appropriate temperature.
- The appliance may have an odour on its initial operation, this will go when the refrigerator and freezer have cooled sufficiently.

Energy efficiency

For the most energy efficient use of your appliance:

- Ensure your refrigerator has adequate ventilation.
- Do not cover your appliance with any material that will prevent air from flowing around the cabinet sides.
- Ensure you vacuum around the appliance to remove dust and accumulated debris. Keep the appliance and it's cabinetry free of dust by wiping down with a dry, lint-free cloth (refer to section 'Cleaning and caring for your refrigerator').
- Allow good clearances in front of air ducts within the cabinet for maximum cold air distribution.
- Cool down hot foods before placing them in the appliance.
- Do not overfill the compartments.
- Keep door openings to a minimum.
- Select a temperature setting that isn't too cold.
- Check your door seals for leaks.

SmartTouch control panel

The control panel is located in the inside front of the refrigerator. It enables you to view and modify all the features and options of your refrigerator.



SmartTouch control panel variants for ActiveSmart™ refrigerators. Special features available only on selected models.

SmartTouch CONTROL PANEL FEATURES		
	Compartment	Allows you to select which compartment to adjust the temperature.
	Alarm mute	Deactivates the door alarm for 20 minutes.
−	**Colder**	Reduces the temperature of compartments.
+	**Warmer**	Increases the temperature of compartments.
	Fast Freeze	Boosts the freezing speed by dropping the freezer to its coldest temperature for 12 hours.
	Bottle Chill	Allows you to rapidly chill your beverage for a set time of 15 minutes.
	Ice On/Off	Indicates when automatic ice maker is on or off.
	Ice Boost	Increases ice production up to 30% from standard ice making.
	Key lock	Indicates when the buttons on the control panel are disabled.
	Filter change indicator	Icon will illuminate indicating when the water filter requires changing.
	Sabbath mode	All alarms, lights and displays are deactivated for 80 hours.
	Key mute	Deactivates sounds of all button presses.

External display (Water dispensing models only)

This display enables you to lock the water dispenser, indicates to you when 'Bottle Chill' is activated and when your water filter requires changing.



Electronic external display

EXTERNAL DISPLAY FEATURES		
Lock	**Dispenser lock button and LED light**	Locks/unlocks the water dispenser. When locked the LED above the button will illuminate.
	Bottle Chill indicator	Icon will illuminate indicating when 'Bottle Chill' is activated and flashes when beverage is ready.
	Filter change indicator	Icon will illuminate indicating when water filter requires changing.

Humidity control system

Humidity control lids

- The control lids are fitted to the fruit and vegetable bins of your refrigerator.
- These lids provide a humid microclimate to extend the storage times of fruit and vegetables.
- The lids have specially designed grooves that retain moisture to prevent condensation from dripping onto the fruit and vegetables at times of high humidity.

Temperature control

- Once you turn on your refrigerator for the first time, the cooling system will automatically cool all compartments to their set temperatures.
  - This will take between 2 – 3 hours.
- The internal control panel enables you to change and control the temperature of all compartments accurately and independently regardless of the temperature or humidity of the surroundings whether it is summer or winter.
- Check the operation of your refrigerator once every 4 hours for the first 24 hours.
- If at any time you notice that the refrigerator is not cooling properly, call your installer/ Fisher & Paykel trained and supported service technician to verify the unit is operating properly. Take immediate steps to prevent food from spoiling by storing in another refrigerator or freezer.
- The internal control panel default setting is to show the set temperature for the fresh food compartment.

Adjusting the temperature — Fresh food compartment

- Press the ▯ button once to adjust the fresh food compartment temperature.
- The fresh food compartment light will illuminate.
- Press + button to increase the temperature, press − button to decrease the temperature.

Adjusting the temperature — Frozen food compartment (freezer)

- Press the ▯ button twice to adjust the frozen food compartment temperature.
- The frozen food compartment light will illuminate.
- Press + button to increase the temperature, press − button to decrease the temperature.

Door alarms

- If the fresh food compartment door is left open, the alarm will beep after 90 seconds, if the freezer door is left open the alarm will beep after 60 seconds.
- If either of the doors remains open, subsequent beeps will sound every 30 seconds for 5 minutes
- If either door remains open for 5 minutes or longer, an alarm will sound continuously and the interior compartment light(s) will turn off.

Alarm Mute

- To activate, press the button once.
- The light above the button will illuminate to indicate the refrigerator is muted.
- If the doors are left open for 5 minutes or more, the compartment light turns off and normal door alarms are suspended.
- 'Alarm Mute' will deactivate after 20 minutes.
- To deactivate manually, press the button again.
- Closing the door also deactivates the 'Alarm Mute'
  Note: When the fresh food or freezer compartment door is left open for longer periods of time, food quality and/or safety may be compromised.

Key Mute

Key mute allows you to silence all button presses.

- To activate key mute, press the button for 4 seconds.
- The icon on the internal control panel illuminates.
- Once key mute is activated, all key sounds are silenced.
- Door alarms and the 'Bottle Chill' alarm are still operational.
- Deactivate by pressing the button for 4 seconds, the icon will no longer illuminate.

Key Lock

'Key Lock' allows you to disable the buttons on the internal control panel. This is useful when cleaning your refrigerator.

- To activate 'Key Lock' press the − and + buttons for 4 seconds.
- The icon on the internal control panel will illuminate.
- Pressing any of the buttons will sound several beeps to tell you that they are disabled.
- 'Key Lock' will not automatically deactivate. To deactivate, press the − and + buttons for 4 seconds.
- The icon will not illuminate.

Sabbath mode activation

In Sabbath mode, alarms, lights and displays are deactivated for 80 hours.

- To activate Sabbath mode, press , and buttons for 4 seconds.
  - The icon on the internal control panel will illuminate.

Once in Sabbath mode:

- The interior light will not turn on when you open the refrigerator.
- The door alarms will not operate.
- The display will not illuminate, except the Sabbath mode icon.
- The internal and external control panels will not operate.
- Sabbath mode automatically deactivates after 80 hours.

- To deactivate manually, press , and for 4 seconds.
  - The icon on the internal control panel will not illuminate.

Note: If you turn off your refrigerator while in Sabbath mode it will resume automatically once the refrigerator is switched on again.

Using your water dispenser (Water dispensing models only)

Ensure you have followed the steps outlined in 'Before you start using the Ice & Water or Automatic Ice function' prior to your first use of the water dispenser.


Water dispenser

Dispensing

- Your water dispenser is designed for one-handed operation.
- To dispense water, gently press the dispensing pad with a glass or container.
- To stop the flow of water, simply pull your glass or container away from the dispensing pad.
- Pressing hard against the dispensing pad will not increase the flow or dispense more water.

IMPORTANT!

To avoid damage to property or personal injury do not put hands, fingers or objects up the dispenser opening.

Dispenser Lock

The dispenser lock is located on the external display and can be activated to prevent water from being dispensed. This is useful when you are cleaning the external display or when there are small children around.

- To activate dispenser lock, press the button for 4 seconds.
- The light above the button will illuminate.
- When the dispenser pad is pressed, several beeps will sound to alert the user that water cannot be dispensed.
- To deactivate dispenser lock and dispense water, press the button for 4 seconds. The light above the button will not illuminate.

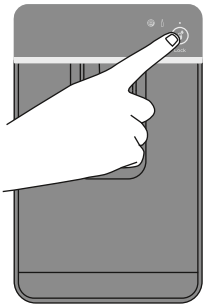
Dispenser Lock

Water filter (ice & water and automatic ice models only)

The water supplied to your refrigerator is filtered to remove impurities through a filter located internally at the top right corner of the refrigerator. Replace your filter cartridge every 6 months.

- There is a replacement indicator icon on the internal control panel (Ice & Water and Automatic Ice models) and external display (Ice & Water models only) which will appear when the filter needs replacing. The icon will flash, as a reminder, when water is dispensed.
- Replacement filter cartridges are available from your Fisher & Paykel dealer, online or from a Fisher & Paykel service technician. The details of the replacement filter cartridge are labelled on the cartridge.

Changing the water filter cartridge

Please refer to the installation instructions provided with your replacement filter.

Using your ice maker
(Ice & Water and automatic ice models only)

Ice On/Off

Your ice maker is designed to automatically dispense ice into the ice storage bin below until it detects the bin is full. The more ice you use, the more it makes.

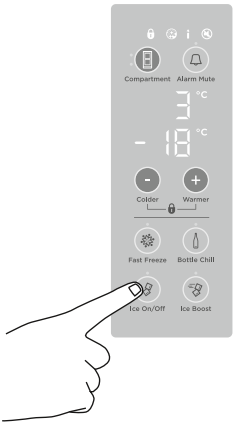

Turning ice maker on

First use

- The ice maker will be off when you turn your refrigerator on for the first time after installation. The light above the 'Ice On/Off' icon will be off.
- To turn your ice maker on press the button. The light above the 'Ice On/Off' icon will be illuminated when the ice maker is on.
- Press and hold , − and + together for 4 seconds then close the door(s). The ice tray will flip twice and empty the water into the bin below. The ice tray will flip only after the doors are closed.
- Repeat the cycle to help remove any dust in the ice tray collected during manufacture and transport.
- Empty the water in the bin and return the bin correctly. Ensure that the scoop is located in front of the bin.
- Once your ice maker is turned on, discard the first 3 harvests of ice (8 cubes per harvest). This will flush away any impurities in the water line and ensure the best ice quality.
- Carrying out the above steps after a holiday/vacation or extended periods of not using ice.

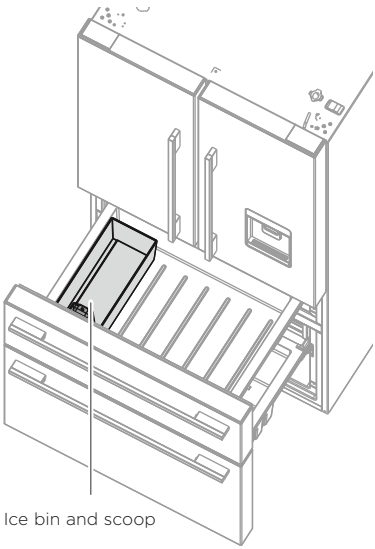
Ice bin and scoop

Turn your ice maker off if:

- There is no water supply for several hours.
- You are removing the ice storage bin for a period of time.
- You are going on holiday/vacation.

Information about your ice maker

- Your automatic ice maker will produce approximately eight cubes of ice every 3 – 4 hours, depending on the freezer compartment temperature and the number of door openings.
- When the 'Ice Boost' function is activated, ice production will increase up to 30% from standard ice making.
- The ice cube tray will fill with water.
- When cubes are frozen, they will be ejected from the ice tray into the ice storage bin.
- Ice making will continue until the storage bin is full.
- Ice making will resume once you start to use the stored ice.
- Your Ice & Water product comes with a smaller ice bin inside the larger freezer bin.
- Attached to the ice storage bin is the scoop for the ice. This scoop provides hygienic access to the ice.
- If a large amount of ice is required, remove an ice storage bin and allow ice to fall into the larger bin.
- For maximum ice storage, level the stored cubes with the ice scoop.
- If ice is not used often, old cubes will become cloudy, taste stale, will shrink and may stick together. Empty the ice storage bin periodically and wash in lukewarm water. Dry thoroughly and place back into the correct position.

IMPORTANT!

- **Avoid contact with the moving parts of the ice maker ejector mechanism, and do not place your fingers on the automatic ice making mechanism while the refrigerator is in operation.**
- **Do not use ice cubes that may have become discoloured, usually with a green-blue colour. If such discolouration is noted, discard the ice cubes and contact your Fisher & Paykel trained and supported service technician.**
- **Ensure the ice maker is connected to the filter and to a drinkable water supply only.**
- **Installation of the water connection to the ice maker must be completed by a Fisher & Paykel trained and supported service technician or a qualified plumber.**

Bottle Chill

This function allows you to rapidly chill your beverages in the freezer for a set time of 15 minutes. The time taken to chill depends on the size of your beverage. If your beverage is not cold enough after 15 minutes, return it to the freezer and reset the 'Bottle Chill' function.

- To activate, press the button on the internal display. The 'Bottle Chill' light will illuminate when the function is activated. The icon will illuminate on the external display (Ice & Water and Automatic Ice models only).
- An alarm will sound after 15 minutes to remind you to remove your beverage.
  - For non-Ice & Water models: open the fresh food compartment door and press the button on the internal control panel to silence the alarm.
  - For Ice & Water models: the icon will flash on the external display. Press the button on the external display to silence the alarm.
- To deactivate 'Bottle Chill' before 15 minutes, press the button again on the internal control panel.
- When 'Bottle Chill' is deactivated, the light will not illuminate and the icon is not visible on the external display (Ice & Water model only).

Fast Freeze

'Fast Freeze' boosts the freezing speed by dropping the freezer to its coldest temperature for 12 hours, which helps to retain freshness, texture and taste during the freezing process.

- To activate, press the button on the internal display. The 'Fast Freeze' light will illuminate when the function is activated.
- To deactivate before the 12 hours has elapsed, press the button again. When 'Fast Freeze' is deactivated the light is off.
- For best results activate the function before it is required. Alternatively, activate it when placing food into the freezer.

Ice boost function

This function is for use when you require more ice eg for a party. The 'Ice Boost' function increases ice production up to 30% from standard ice making, and deactivates automatically after 24 hours.

- When you first turn your ice maker on, the 'Ice Boost' function is off.
- To turn this function on, press the button. The light above the button will illuminate when the 'Ice Boost' function is on.
- The 'Ice Boost' function is paused once your ice bin is full.
- To manually deactivate this feature press the button again. The light above the button will not illuminate.
- Activating the 'Ice Boost' function will automatically turn on ice making.
- Deactivating ice making automatically deactivate the 'Ice Boost' function.

Manual ice system (selected models only)

An ice storage bin which sits inside the upper top freezer bin provides storage for and gives you access to clean, clear ice cubes.

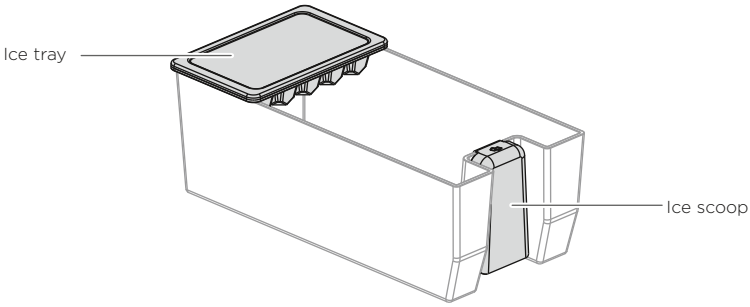

Information about your manual ice system

To make ice:

- Take the ice tray and lid from the top of the ice storage bin. Remove the lid from the ice tray and fill the tray with water. Place the lid back on the ice tray and carefully position it back onto the ice storage bin.
- Once the ice is solid, take the ice tray and lid off the ice storage bin, remove the lid from the tray and twist the ice tray at each end in opposite directions. Turn the ice tray over the ice storage bin to dislodge the cubes into the bin.
- Fill the ice tray with clean water and repeat to fill the ice storage bin.
- Attached to the ice storage bin is the ice scoop which provides hygienic access to ice.
- To access ice cubes, take the ice tray and lid from the top of the ice storage bin and place onto a flat surface. Take the scoop from the front of the bin, scoop cubes into vessel and then replace the scoop, tray and lid back to the top of the bin.
- For maximum ice storage, level the stored cubes around the bin with the ice scoop.
- If ice is not used often, old cubes will become cloudy, taste stale, will shrink and may stick together. Empty the ice storage bin periodically and wash in lukewarm water. Dry thoroughly and place back in the correct position.

Bottle holder (where fitted)

- The bottle holders can be used to store a variety of bottles.
- To position the bottle holder in your refrigerator, slot the back edge of the bottle holder onto the back trim of any shelf in the fresh food compartment.
- Unused bottle holders can be stacked up on top of one another so they do not take up unnecessary shelf space.
- Bottles are best stored with the neck of the beverage facing the front of the refrigerator.

Glass shelves

- Standard glass shelves can not be repositioned in your refrigerator. Refer to 'Cleaning and care - Shelving' for details on how to remove the standard glass shelves for cleaning.

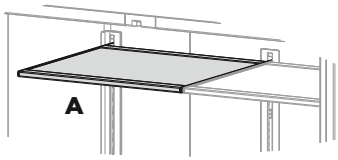

Cantilever glass shelves — half-width and full-width

- The cantilever glass shelves are designed to be strong and versatile.
- The half-width and full-width shelves are removable and can be repositioned in your refrigerator.
- Place the half-width shelves side-by-side when you store large items such as platters.
- Place the half-width shelves at different levels to maximise the storage space when you store items of varying heights.

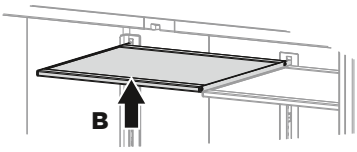

To remove for repositioning

1. Hold the front and back edge of the shelf firmly (refer to **A**).
2. Push the shelf up vertically to dislodge from back support lugs (refer to **B**).
3. Slide the shelf towards you (refer to **C**).

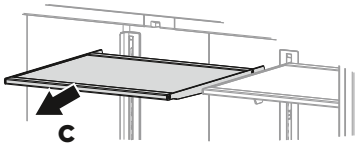

Drip tray (Water dispensing models only)

- The drip tray is designed to fit into the bottom of the water dispenser panel.
- To insert the tray ensure the rounded sides are fitted into the dispenser panel first.
- The purpose of the tray is to capture drips of water that may fall after dispensing.
- The tray can be removed for cleaning.

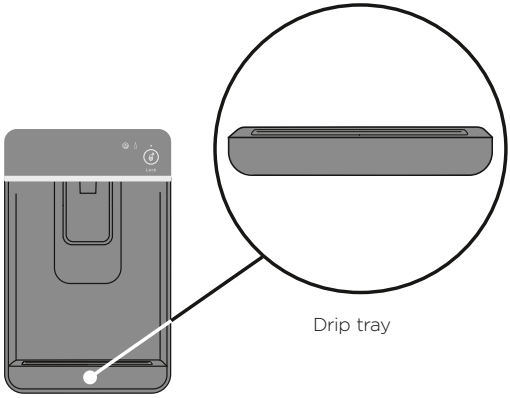

Exterior

Stainless exterior doors

- Clean the exterior door with liquid dishwashing detergent dissolved in warm water and a soft cloth.
- Dry the door with a lint-free cloth.
- Do not use any abrasive, stainless steel cleaners or solvents on the door surface.

Other exterior surfaces

- Clean all other exterior surfaces with a mix of warm water and liquid dishwashing detergent, and a soft cloth.
- Rinse with clean water and dry with a clean, lint-free cloth.

Door gasket

- Clean the magnetic door gasket every three months with a toothbrush, and liquid detergent dissolved in warm water.
- Apply petroleum jelly lightly on the hinge side of the gasket to ensure cleanliness and maintain a good seal.

Cabinet surround

To maximise operating efficiency regularly vacuum the flooring around your refrigerator.

- Cleaning behind your refrigerator is required once or twice a year.
- Wind up the feet and carefully ease the refrigerator out of its position. Switch off and unplug.
- Vacuum the flooring behind your refrigerator and the rear compartment cover (where fitted) to remove dust accumulation. Use a dry lint-free cloth to clean the refrigerator walls and surrounding cabinetry.
- After cleaning, plug in and switch on. Push the appliance into position and wind feet down.

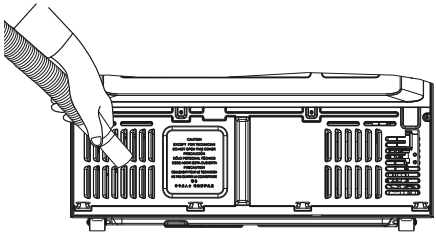

Cleaning the rear compartment cover

WARNING!

Electric Shock Hazard. Do not remove rear compartment cover. This may expose you to the risk of an electric shock.

External display and water dispenser (Water dispensing models only)

- Activate the 'Dispenser lock' function to prevent water from dispensing when cleaning (refer to page 23 for details)
- Clean the pad and interface panel with a damp, soft lint-free cloth.

Drip tray (Water dispensing models only)

- To clean, remove the drip tray from the dispenser panel
- Pull the two halves of the tray apart.
- Clean with liquid detergent dissolved in water and a soft lint-free cloth.
- Rinse with clean water and dry with a clean, lint-free cloth.
- Securely clip the two halves together.
- Re-insert the drip tray back into the dispenser panel.

Interior

- It is important to keep the interior of the refrigerator and freezer clean to help prevent food from becoming contaminated during storage.
- The amount and types of food stored determines how often cleaning should be carried out in the refrigerator (ideally once every 1 – 2 weeks).
- Remove the shelves from cabinet and door. Wash shelves and storage bins in warm water and detergent; rinse in clean water and dry before replacing.
- Wipe all interior surfaces, including all door shelves, using only liquid dishwashing detergent dissolved in warm water or baking soda dissolved in warm water (add 1tsp of baking soda to every 500ml of water) and a soft lint-free cloth. Rinse with clean water and dry with a clean, lint-free cloth.
- Add a few drops of vanilla essence or vinegar to the water before cleaning to help remove “stale refrigerator” smell.
- Do not use harsh chemicals, abrasives, ammonia, chlorine, bleach, concentrated detergents, solvents or abrasive scouring pads on any part of your refrigerator. Some of these chemicals may dissolve, damage and/or discolour the interior of your refrigerator.

Glass shelves (including cantilever) and Bottle Holders

- Clean with liquid detergent dissolved in warm water and a soft lint-free cloth.
- Rinse with clean water and dry with a clean, lint-free cloth.

Freezer bins

- Do not remove the freezer bins. To clean, simply wipe clean with a soft lint-free cloth.

Ice storage bin

- Clean your ice bin and discard any old ice in the bottom of the bin(s) regularly
- Use only liquid detergent dissolved in warm water and a soft lint free cloth when cleaning. Rinse with clean water and dry with a clean, lint-free cloth.
- Ensure that the ice scoop is placed in correct position in the bin, right hand side or at the front of the bin (model dependent).
- It is important to regularly clean your ice bin and discard any old ice in the bottom of the bin. Do not clean the ice maker components.
- Turn OFF the ice maker before you leave for a vacation/holiday. Refer to ‘Using your ice maker’ section.
- On your return, turn on the ice maker and discard the first 24 hours of ice harvest. Refer to ‘Using your ice maker’ section.

IMPORTANT!

Many commercially available cleaning products contain solvents that may attack the plastic components of your refrigerator and cause them to crack. It is important to use only warm water and a small amount of liquid dishwashing detergent on any components inside and outside your refrigerator. Avoid using anti-bacterial cleaning products on either the interior or exterior of the cabinet as they may cause rusting of metal components and cracking of plastic components.

How to remove shelving and bins for cleaning

Shelving

To remove a shelf:

1. Hold the shelf firmly and pull the shelf towards you (refer to **A**).
2. Lift the shelf up vertically (refer to **B**).
3. Slide the shelf towards you (refer to **C**).

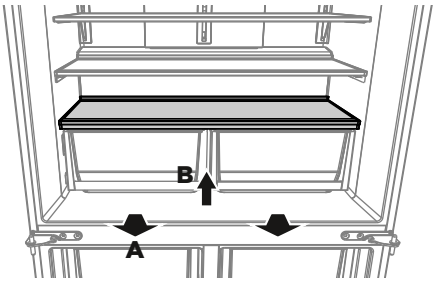

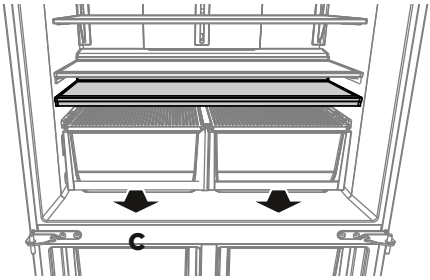

Note: Refer to 'Operating Instructions - Glass shelves' for details on how to remove cantilever glass shelves

Humidity control lid

To remove:

1. Remove the shelf directly above the bins, follow the steps above.
2. Hold the lid firmly and lift the outside edge of the lid up vertically (refer to **A**).
3. Slide the lid towards the outside wall of the fridge until the lid unclips from the centre bracket (refer to **B**).
4. Pull the shelf towards you.

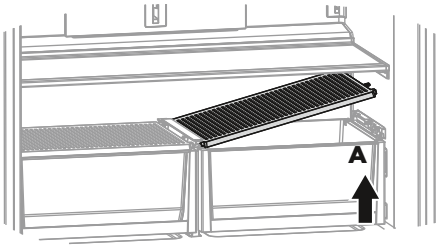

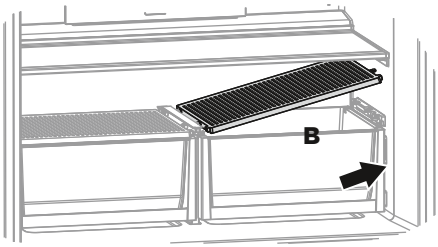

Fixed bins

To remove:

① For ease of removal, empty food from the bin first.
② Hold the centre front of the bin handle.
③ Lift vertically to unclip from the runners and pull bin towards you to remove (refer to **A**).
④ Push both runners back into refrigerator (refer to **B**).

To replace:

① Extend the runners out from your refrigerator.
② Place the bin on top of the runners.
③ Push the bin down slowly until you feel it clip.

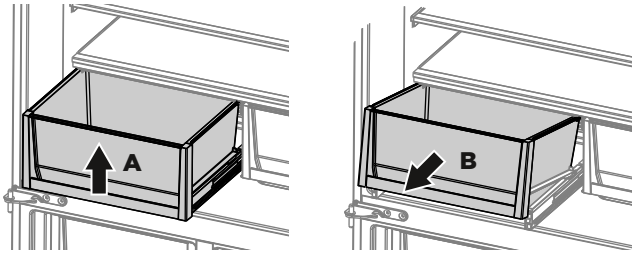

Note: The freezer bins are permanently fixed. They cannot be removed from the freezer compartment. To clean simply wipe with a soft, damp cloth.

IMPORTANT!

- **Ensure that bins are securely clipped onto the runners before use.**
- **Bin runners are pre-lubricated, and will not need to be re-lubricated during their life. Do not attempt to clean grease from the runners, as this will affect their ability to function. Do not immerse runners in water.**

Holiday/Vacation

Before leaving:

- Turn the ice maker to OFF on the internal control panel.
- Shut off the water supply to the refrigerator.

On return:

- Dispense 4L of water and discard to ensure the water tank is refilled with fresh water.
- Turn on the ice maker. Discard the first 3 harvests of ice (8 ice cubes are produced per harvest).

STORING FOOD IN YOUR REFRIGERATOR

Your refrigerator helps to extend the storage times of fresh perishable foods. The cold temperature slows down the major causes of food spoilage, particularly the growth of bacteria, moulds and yeasts causing chemical and physical reactions.

General fresh food storage

The quality of food before it is placed in the refrigerator is critical to successful storage.

For best results:

- Store only fresh, high quality food
- Buy only the amount that you will use within the recommended storage time. If you buy extra freeze it.
- Make sure you wrap your food in suitable packing materials before storing in the refrigerator.
  - This keeps the foods fresh and prevent dehydration, colour deterioration, loss of flavour, and transfer of odour.
  - Fruits and vegetables can be stored in vegetable bins and do not need to be wrapped.
- Store perishable foods in the refrigerator immediately after purchase. This will prolong their shelf life. Storing at room temperature increases the rate of deterioration.
- Avoid placing food directly in front of air outlets. This will prevent the food from freezing and ensure cold air is circulated efficiently.
- Keep door openings to a minimum. Avoid opening the door unnecessarily
- Ensure hot foods and drinks are cooled sufficiently before placing them in the refrigerator.
- Hot foods may cause other foods to warm to unsafe temperatures. If in contact with plastic components of your refrigerator, hot containers may cause damage. Additionally, hot foods may cause an in increase in energy consumption
- Ensure raw and cooked foods are stored in separate air tight containers to prevent cross contamination. Store raw foods on the bottom shelf of the refrigerator.
- Keep the refrigerator clean by frequently wiping the inside walls and shelves (refer to ‘Cleaning and caring for your refrigerator’ section).
- Regularly check the quality of food in your refrigerator.
  - Discard food that shows signs of spoilage
  - Protein rich foods (meats, fish, poultry) deteriorate faster than others
  - Use foods within the recommended storage times

Dairy foods and eggs

- Store eggs in the covered door shelves of the refrigerator or in their carton as the porous egg structure is susceptible to absorbing odours.
- It is ideal to use room temperature eggs when using it for baking. Make sure you take out the eggs from the refrigerator 2 hours before using them.
- Ensure pre-packed dairy products stamped with recommended ‘use by/best before/best by’ dates are consumed within the recommended storage time.
- Ensure dairy products are stored in their original packaging until ready to consume. Once opened, wrap them in suitable packing material eg cling film to avoid transfer of odour.

Red meat

- Ensure raw and cooked foods are stored in separate air tight containers to prevent cross contamination from the loss of raw meat juices.
- Ensure delicatessen meats are consumed within the recommended storage time. These can be stored in the slim storage bin if you want to keep them separate.

Poultry

- Keep poultry goods in the original packaging until you use them.
- Place packaged poultry in a dish and store in the bottom shelf of your refrigerator to prevent any potential spills from contaminating other foods.
- Poultry goods should only be stuffed right before cooking. Preparation in advance may result in food poisoning.
- Ensure stuffing is removed from cooked poultry, and both are sufficiently cooled then covered before storing in the refrigerator.

Fish and seafood

- Whole fish and fillets are ideally consumed on the day of purchase. Ensure they are stored in suitable covered containers or packaging. This will prevent foods from drying out and transferring odours.
- If storing overnight or longer, ensure the whole fish is cleaned and dried before covering and storing, preferably on a bed of ice, in your refrigerator. Ensure fish fillets and other seafood are treated the same way.
- Keep shellfish chilled at all times and consume within 1 – 2 days.

Fruit and Vegetables

- Not all fruits and vegetables are suitable for prolonged refrigeration storage at temperatures below 5°C.
- Undesirable physical and chemical changes will result from low temperature storage, such as loss of rigidity, browning, increased rate of deterioration and potential loss of flavour.
- Try to store fruit and vegetables separately, to reduce the potential for rapid ripening.
- Ensure fruits are not washed before storage, this increases the rate of deterioration.
- Ensure vegetables are sorted and damaged parts are discarded.

Precooked foods and leftovers

- Ensure cooked foods are stored in suitable covered containers. This will prevent foods from drying out.
- Keep for only 1 – 2 days.
- Reheat leftovers only once and until steaming hot.

Beverages

- Ensure beverages are stored tightly in the door shelves of the refrigerator. This prevents the bottles from tipping or falling out when the refrigerator door is opened. Otherwise, use ‘bottle holders’ to store beverages on the shelves.

Freezing and storing foods at temperatures -18°C or colder helps retain the physical quality and nutritional value of foods. Low temperatures inhibit the growth of bacteria, moulds and yeasts, thereby restricting chemical and physical reactions to extend the food's storage life

General frozen food care

Successful freezing depend on the foods' quality, packaging and proportions. We recommend freezing foods fast to maintain moisture content and to prevent the formation of large ice crystals.

For best results:

- Store only fresh, high quality food.
- Ensure foods are packaged in suitable packaging material before freezing.
- Ensure foods freeze as quickly as possible and in small quantities. Do not attempt to freeze more than 1kg of meat per 25L of freezer storage volume.
- Freezing in smaller quantities helps retain the nutrient qualities and appearance of the food as best as possible.
- When freezing many foods at once, activate the 'Fast Freeze' function 2 hours beforehand.
- Ensure fresh food to be frozen does not come into contact with already frozen foods. This will cause frozen foods to start defrosting.
- When freezing foods containing liquids or semi-solids, ensure there is a 20 – 50mm head space to allow the foods to expand as they freeze.
- Keep door openings to a minimum. Avoid opening the door unnecessarily.
- Ensure air is removed from food packaging. This will avoid large formation of ice crystals and prevent freezer-burn on foods. The formation of small ice crystals is normal.
- Ensure hot foods and drinks are not placed directly into the freezer. Hot containers may damage shelves and walls of the refrigerator, increase energy consumption and cause already frozen foods to defrost.
- Ensure partially or fully defrosted foods are never re-frozen. Defrosted foods can only be refrozen after they have been cooked.
- Ensure there is a constant turnover of foods. Use older items of food first and do not exceed the recommended storage times. See table below.

Recommended freezer storage times
These times should not be exceeded.

MONTHS	TYPE OF FOOD STORED
1	Bacon, casseroles, milk
2	Bread, ice cream, sausages, pies, prepared shellfish, oily fish
3	Non-oily fish, shellfish, pizza, scones and muffins
4	Ham, baked goods, beef and lamb chops, poultry pieces
6	Butter, blanched vegetables, whole eggs and yolks, cooked crayfish, raw minced meats
12	Dried fruits or fruit in syrups, egg whites, raw beet, whole chicken, raw lamb, fruit cakes

Red meats, poultry and game

- Select lean meats as opposed to fatty meats. These have a lower fat content, freeze much better and can be stored longer.
- When packaging meats (chops, steaks, cutlets), separate each with a sheet of plastic freezer film, then package all together. This prevents the meats forming into a solid block on freezing.
- Ensure stuffing is removed from poultry prior to freezing. Whole poultry or poultry pieces should only be stuffed right before cooking. Preparation in advance may result in food poisoning.

Fish and seafood

- Ensure whole fish are rinsed inside and out with cold running water to remove loose scales and dirt, then dried and packaged before storing in the freezer.

Fruit

- Choose high quality, ripe, and ready to eat fruits. Only select fruit varieties recommended for freezing.
- Most packaged fruits can be stored for 8 – 12 months. Fruits packed in syrup are ideal for desserts, while fruits packed without sugar are better used for cooking.

Vegetables

- Not all vegetables are suitable for freezing eg lettuce, radishes, and onions. Select only ripe and ready-to-eat vegetables for freezing.
- Ensure vegetables are sorted and damaged parts are discarded.
- Blanch vegetables before freezing. This technique inhibits vegetable enzymes and helps preserve the colour, flavour and nutritional value of the vegetables without chemical or physical damages.
    - To blanch, put vegetables in boiling water for 2 – 4 minutes, remove and cool quickly in ice-cold water. Drain well then package.

Precooked foods and leftovers

- Ensure cooked food are stored in suitable covered containers and away from raw frozen foods.
- Not all foods are suitable for freezing; some should be separated on defrosting such as cooked egg whites, custards and cream fillings, meringue toppings, milk porridges, gelatin or jelly- like dishes and salad dressings.

Beverages

- Ensure that the ‘Bottle Chill’ function is active before cooling any carbonated beverages to avoid freezing. Frozen beverages can lead to bottle/can explosion in the freezer.

DEFROSTING FOOD IN YOUR REFRIGERATOR

Your refrigerator is designed to help defrost/thaw foods in a safe manner by preventing the growth of bacteria, moulds and yeasts which are the major causes of food spoilage.

General defrosting food care

For best results:

- Ensure foods are defrosted in the refrigerator, microwave oven or multifunction oven.
- Never defrost foods at room temperature. This could potentially promote the growth of bacteria and cause food poisoning even after cooking.
- Ensure partially or fully defrosted foods are never re-frozen. Defrosted foods can only be refrozen after it has been cooked.

Red meats, poultry and game

- Red meat can be cooked from frozen, or from the partly or completely defrosted states.
- Ensure extra cooking time is given when cooking from the frozen state.
- Ensure poultry is completely defrosted before cooking and never use the frozen juices for cooking.

Fish and seafood

- Ensure fish does not come into contact with other foods when defrosting in the refrigerator.
- For best results, cook from either the frozen or partly defrosted state.

Fruit and vegetables

- Defrost frozen fruits in the refrigerator. Alternatively, they can be used as part of frozen desserts.
- Frozen vegetables are best cooked from their frozen state.

If your refrigerator is turned off for any reason, wait 10 minutes before turning it back on. This will allow the refrigeration system pressures to equalise before restarting.

Moving your refrigerator

- Turn off the refrigerator and unplug from the power point. Remove all food.
- Turn the adjustable feet to the right as far as they will turn.
- Ease the refrigerator out of its position. Tuck the power cord away, tape the shelves in place and tape the doors closed. If the cabinet needs to be placed at an angle or laid down, carefully lay it on its side (the left hand side when viewed from the front).
- Relocate and install. If the appliance has been left on its side for any length of time, leave it standing upright as long as you can (a few hours) before turning on.

Storing your refrigerator

- When storing your cleaned appliance, leave the doors open. This allows air to circulate and prevents the build up of bacteria and moulds.
- Before using again, clean well using a mixture of warm water and a small amount of liquid dishwashing detergent. Rinse with clean water and dry with a soft lint-free cloth.

Holiday/Vacation time

Leave your refrigerator operating while you are on holiday/vacation.

Normal refrigerator sounds

Your refrigerator is designed with innovative ActiveSmart™ features that can produce sounds that may be different from your old refrigerator.

Normal operational sounds include:

- Fan air flow sound. ActiveSmart™ refrigerators have fans which change speed depending on demand. During cooling periods, such as after frequent door openings, fans circulate the cold air in the refrigerator and freezer compartments producing some air flow sound. This is quite normal.
- Cracking or popping sound which may occur when the defrost function is operating.
- Running water sound. This is the liquid refrigerant in the system and can be heard as a boiling or gurgling noise.
- An audible hissing sound after closing the freezer door. This is due to the pressure difference between the warm air that has entered the cabinet and suddenly cooled, and the outside air pressure.
- Other sounds may be heard for the following reasons:
  - Cabinet not level.
  - Floor uneven or weak.
  - Bottles or jars rattling on shelves.
- If this is your first refrigerator with an ice maker, you will hear occasional sounds that may be unfamiliar. They are normal ice making sounds and are not cause for concern.
- The following sounds are normal with the operation of an ice maker:
  - Motor operation (low humming).
  - Running water as the ice maker and/or water tank fills.
  - Water valve opening and closing (hissing sound).
  - Ice being loosened from the ice moulding tray (cracking).
  - Ice dropping into bin (clunking).

TROUBLESHOOTING

If there is a problem with your appliance, please check the following points before contacting your local Fisher & Paykel trained and supported service technician or the Customer Care Centre.

Product parts and accessories can be purchased through Fisher & Paykel Customer Care Centre or online at fisherpaykel.com (this service is available to selected markets only).

All models

PROBLEM	POSSIBLE CAUSES	WHAT TO DO
Appliance does not operate.	No electricity at power outlet.	Check that the plug is correctly connected and power switched on.
		Check another appliance at the same outlet.
		Check house fuse.
Light not working.	Light not functioning.	The LED light cannot be serviced by the user. Contact your Fisher & Paykel Dealer or Fisher & Paykel trained and supported service technician.
	Refrigerator not working.	Check refrigerator is turned on at wall.
Light and display not working.	Product in 'Sabbath Mode'.	Press and hold , and together for 4 seconds.
Motor operates for long periods.	Hot weather.	Minimise door openings to allow temperature to stabilise.
	Frequent door openings.	
	Large amount of food recently added.	
	Temperature control set too low.	Refer to section 'Temperature control'.
	Doors not sealing properly.	Check that cabinet is level and gasket seals are clean.
Storage compartments too warm.	Temperature setting not correct.	Refer to section 'Temperature control'.
	Frequent door openings.	Minimise door openings to allow temperature to stabilise.
	Large amount of food recently added.	
Food freezing in the refrigerator.	Temperature setting not correct.	Refer to section 'Temperature control'.
	Food placed directly in front of air outlets.	Move chill sensitive foods away from the centre back of the shelves.
Unfamiliar noises.	Cabinet not stable or level.	Refer to sections 'Installation instructions' or 'ActiveSmart™ sounds'.
	Freezer is defrosting.	

All models

PROBLEM	POSSIBLE CAUSES	WHAT TO DO
Water in the vegetable bins.	Condensation is formed by the water produced by fruit and vegetables.	A small amount of condensation is beneficial for fruit and vegetable storage.
		Wipe out water with a cloth.
Exterior of cabinet is warm.	This is normal.	
Warm spot on central door seal. (French door models only).	You may feel a warm spot at times on the central seal between the two refrigerator doors.	This is perfectly normal and is part of the normal refrigerator operation.
Condensation on outside of refrigerator/ freezer.	Not unusual during periods of high humidity.	Wipe dry.
Condensation inside fresh food compartment.	Frequent or long door openings.	Minimise door openings.
	Door gasket leaking.	Check that gasket is sitting flat and sealing tightly.
	Not unusual during periods of high humidity.	Wipe dry.
Door handles out of alignment.	With time and usage, movement may occur.	Refer to section 'Installation instructions'.
Tray/bin does not slide in and out evenly.	Packaging trapped.	Check to ensure no food or packaging is trapped behind the tray/bin.
	Runners not extending fully.	Holding onto sides of tray/bin, extend the runners fully by using a firm pull—this will reset the runner.
Appliance operating inefficiently.	Accumulation of dust on or behind the rear compartment cover.	Refer to section 'Cleaning and caring for your refrigerator'. If problem persists please contact Customer Care.
Cannot adjust temperature in frozen food compartment	Either Bottle chill, fast freeze or ice boost is activated	Deactivate Bottle chill, fast freeze or ice boost if function is not desired

Ice & Water and Automatic Ice models only

PROBLEM	POSSIBLE CAUSES	WHAT TO DO
Automatic ice maker does not work.	Ice maker has not been turned on.	Switch on ice maker.
	Bin is in the wrong way or there is no bin in place.	Place bin so scoop is on the left side.
		Ice bin sits directly under ice maker on top left side of freezer.
	Water supply turned off or not connected.	Connect water supply.
	Freezer compartment not working.	Contact Customer Care.
	Water pressure too low.	Check water pressure.
	Water line kinked/squashed.	Check water line for kinks/ squashing.
	Filter clogged.	Water filter may need replacing.
Ice cubes have odour/taste.	Unsealed packages may be transmitting odour/taste.	Old cubes need to be discarded.
		Ensure food packaging is sealed.
	Interior of freezer needs cleaning.	Ice storage bin needs to be emptied and washed.
		Clean refrigerator.
	Poor taste from incoming water.	Filter may need to be replaced with new one.
		Force 2 – 3 ice tray flips.
Slow ice cube freezing.	Door may have been left ajar.	Close door.
	Freezer compartment too warm.	Turn temperature to a colder setting.

Ice & Water and Automatic Ice models only

PROBLEM	POSSIBLE CAUSES	WHAT TO DO
Wet ice/ ice clumping.	Low water pressure.	Check water pressure.
	Filter blocked.	Replace filter.
	Long freezer door openings.	Gently tap ice with scoop to unstick or, if large clumps occur, empty ice bin and make new ice.
	High ambient temperature.	
	Ice bin left out of freezer compartment for a length of time.	
	Ice will stick together over time.	
Filter warning light is flashing.	Filter needs replacing.	Replace filter as soon as possible.
Ice buildup inside freezer compartment.	Freezer door not closing tightly.	Arrange items in freezer so door can close tightly.
		Check and clean door gasket seal.
Ice maker makes unfamiliar sounds or seems too loud.	Normal ice maker operation.	Refer to section 'ActiveSmart™ sounds'.
Ice boost function not increasing rate of ice production.	Ambient temperature very warm.	Minimise door openings.
	Refrigerator is in high usage.	

Ice & Water models only

PROBLEM	POSSIBLE CAUSES	WHAT TO DO
Water has poor taste/odour.	Refrigerator not used for an extended period.	Dispense 4L of water so fresh water supply is replenished.
	New filter installed	
Water dispenser does not work.	Water supply turned off or not connected.	Turn water on.
		Press dispenser for 4 minutes to remove trapped air from water line and to fill the water system.
	Supply line may be blocked.	Check supply for kinks or leaks.
	On first installation there may be air in water system.	To remove air, run 3L of water through the dispenser.
	Filter may be blocked and need replacing.	Replace filter (see your service and warranty booklet provided with your refrigerator).
	'Dispenser Lock' activated.	Press and hold the button for 4 seconds.
	Water frozen in tank.	Increase temperature to a warmer setting in fresh food compartment and freezer.
Water in first glass is warm.	Water dispenser not used for extended period.	Discard first glass of water dispensed.
	Tank capacity used recently.	Allow water time to cool.
Drips overflow drip-shelf.	Air trapped in tank.	Flush 3L water through dispenser, stopping intermittently.
	New filter installed.	Dispense 4L of water through the dispenser, and then another 4L after 4 minutes.
Water flow rate has slowed down.	Filter cartridge is restricted.	Replace filter as soon as possible.

MANUFACTURER'S SERVICE & WARRANTY

For details of your Manufacturer's Warranty and contacts for servicing, please refer to your separate 'Service & Warranty' book provided with your refrigerator.

This product has been designed for use in a normal domestic (residential environment). This product is not designed for any commercial use. Any commercial use by the customer will affect this products Manufacturer's Warranty.

Complete and keep safe for reference:

Model _____

Serial No. _____

Purchase Date _____

Purchaser _____

Dealer _____

Suburb _____

Town _____

Country _____

FISHERPAYKEL.COM

© Fisher & Paykel Appliances 2017. All rights reserved.
The product specifications in this booklet apply to the specific products and models described at the date of issue. Under our policy of continuous product improvement, these specifications may change at any time. You should therefore check with your Dealer to ensure this booklet correctly describes the product currently available.

NZ AU

847364B 10.19