FISHER & PAYKEL

INTEGRATED REFRIGERATOR-FREEZER

610mm INTEGRATED

RS6121WR & RS6121WL

762mm INTEGRATED

RS7621WR & RS7621WL

USER GUIDE

NZ AU GB IE

CONTENTS

Safety and warnings	4
integrated refrigerator-Freezer	8
Before you begin	9
Control panel	10
Storage features	11
Food modes	12
Special features	13
Using your appliance	14
Wifi connection	21
Care and cleaning	22
Food care	30
User warnings and sounds	31
Troubleshooting	32
European Directive 2012/19/EU on Waste Electrical and Electronic Equipment (WEEE)	36
Service and warranty	37

Registration

To register your product visit our website: fisherpaykel.com/register

⚠ WARNING!



Electric Shock Hazard

Failure to do so can result in death, electric shock, fire or injury to persons.

- Read and follow the safety and warnings outlined in this user guide before operating this appliance.

⚠ WARNING!



Risk of fire/flammable material

This refrigerator contains flammable refrigerant isobutane (R600a).

Use this appliance only for the intended purpose as described in the user guide.

READ AND SAVE THIS GUIDE

WARNING!

Read entire manual. Failure to follow all guides and rules could cause personal injury or property damage. When using this appliance, always exercise basic safety precautions including the following:

General Use

- This product has been designed for use in a normal domestic (residential) environment.
- Children aged from 3 to 8 years are allowed to load and unload refrigerating appliances.
- Children should be supervised to ensure that they do not play with the appliance.
- Cleaning and user maintenance shall not be undertaken by children without supervision.
- This appliance can be used by children aged from 8 years and above and persons with reduced physical, sensory or mental capabilities or lack of experience and knowledge if they have been given supervision or instruction concerning use of the appliance in a safe way and understand the hazards involved.
- The manufacturer's installation instructions for product and cabinetry ventilation must be followed when installing the appliance.
- To avoid hazard due to instability of the appliance, it must be fixed in accordance with installation instructions.
- Keep ventilation openings, in the appliance enclosure or the built-in structure, clear of obstruction.
- Do not use mechanical devices or other means to accelerate the defrosting process, other than those recommended by the manufacturer.
- Do not damage the refrigerant circuit.
- In case of damage to the refrigerant circuit, ventilate the area by opening all windows.
- Do not operate electrical equipment or any other equipment that may produce arcs, sparks or flames in the area. Contact your Fisher & Paykel trained and supported service technician immediately to arrange for the appliance to be repaired.
- It is hazardous for anyone other than an fisher & paykel trained and supported service technician to service this appliance.
- DANGER: Risk of child entrapment. Before you throw away your old refrigerator or freezer, the doors and panels should be removed and the racks left in place so that children may not easily climb inside.
- In Queensland, the authorised service person must hold a gas work licence or authorisation for hydrocarbon refrigerants to carry our service or repairs which involve removal of covers.
- Connect to potable water supply only.

Electrical

- This appliance must be installed in accordance with the installation instructions before use.
- To allow disconnection of the appliance from the supply after installation, incorporate a switch in the fixed wiring in accordance with the wiring rules.
- Never unplug your refrigerator by pulling on the power cord. Always grip the plug firmly and pull straight out from the outlet.
- Do not plug in any other appliance at the same power point as your refrigerator or use extension cords or double adapters.

- Repair or replace immediately all electric service cords that have become frayed or otherwise damaged. Do not use a cord that shows cracks or abrasion along its length or at either the plug or appliance end.
- If the power supply cord is damaged, it must only be replaced by your Fisher & Paykel trained and supported service technician because special purpose tools are required.
- When moving your appliance away from the wall, be careful not to roll over or damage the power cord.
- WARNING: Do not use electrical appliances inside the food storage compartments of the appliance, unless they are of the type recommended by the manufacturer.
- When positioning the appliance, ensure the power cord is not trapped or damaged.
- Do not locate multiple portable socket-outlets or portable power supplies at the rear of the appliance.

Food safety

- Regularly clean accessible draining systems and surfaces that come in contact with food.
- Store raw meat and fish in suitable containers in the refrigerator, so that it is not in contact with or drips onto other food.
- To avoid contamination of food; Do not open the door for long periods as it can cause a significant increase of the temperature in the compartments of the appliance.
- If the appliance will be left empty for long periods, switch off, defrost, clean, dry, and leave the door open to prevent mould developing within the appliance.

IMPORTANT!

- Your appliance is designed to operate for many years without the need for service checks. However, if your appliance is malfunctioning, have it attended to by your Fisher & Paykel trained and supported service technician as soon as possible.
- If you suspect that the product is not getting cold—items such as ice cream are melting—remove all perishable food and store in another appliance or cooler to prevent spoilage. Immediately call for a service technician.

Cleaning

- Clean water tanks if they have not been used for 48 hours; flush the water system connected to a water supply if water has not been drawn for 5 days.
- Use mild dish-washing liquid with warm water and a lint-free cloth to clean the product.
- Avoid using anti-bacterial cleaning products on either the interior or exterior of the cabinet as they may cause rusting of metal components and cracking of plastic components. For further information see pages 22 - 29.

Disposal

- Extreme care must be taken when disposing of your old appliance to avoid hazards:
- The flammable refrigerant gas must be safely removed by a qualified service technician.
- The thermal insulation foam in this appliance may contain flammable insulation blowing gases, any exposed foam may be highly flammable and must be carefully treated during disposal.
- DANGER: The doors and panels should be removed and the shelves left in place so that children may not easily climb inside.
- Consult your local energy authority or local codes as to the best way to dispose of your old appliance.

Storing food and drinks/wine

- Do not store explosive substances such as aerosol cans with a flammable propellant in this appliance.
- Never store volatile or flammable materials in your appliance as they may explode.
- Never freeze liquids in glass containers. Liquid expands during freezing, which may cause the container to explode.
- Never freeze carbonated drinks. They may explode.

Water filter

- The water connection to your Ice & water refrigerator must be installed by an authorised plumber or Fisher & Paykel trained and supported service technician and comply with all state and local laws.
- Installation and use MUST comply with all state and local plumbing codes. Check with your local public works department for plumbing codes. You must follow their guidelines as you install the water filtration system.
- Use new tubing supplied with the refrigerator. DO NOT reuse old tubing from old water and ice connections.
- If the water tank has not been used for an extended period of time, or has developed an unpleasant taste or odour, flush the water system. If the problem persists, replace the water filter cartridge and refer to the flushing instructions detailed in section 'Flushing through the water dispenser.

WARNING!

To reduce the risk associated with choking:

- DO NOT allow children under 3 years of age to have access to small parts during the installation of the water filter.

Ice making

- Avoid contact with the moving parts of the ice maker ejector mechanism, and do not place your fingers on the automatic ice- making mechanism while the appliance is in operation.
- Do not use ice cubes that may have become discoloured. If such discolouration is noted, discard the ice cubes and contact your Fisher & Paykel trained and supported service technician.

Power failure

- In the event of a power interruption, the appliance will automatically save the current temperature settings. When power is recovered, the appliance will revert to the current temperature settings only.
- Most power failures are corrected within a short period of time. 1 – 2 hours loss of power will not affect the appliance's temperatures.
- To avoid sudden change of temperature while the power is off, you should avoid opening the door. A refrigerator will keep food safe for up to 4 hours during a power outage. Keep the door closed as much as possible. Discard refrigerated perishable food such as meat, poultry, fish, eggs, and leftovers after 4 hours without power.

INTEGRATED REFRIGERATOR-FREEZER

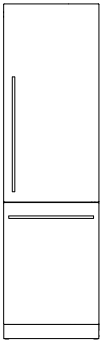

RS6121WR
610mm Refrigerator-Freezer
Right Hinge

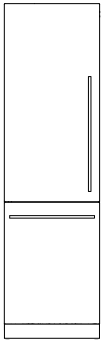

RS6121WL
610mm Refrigerator-Freezer
Left Hinge

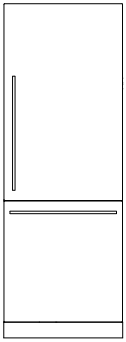

RS7621WR
762mm Refrigerator-Freezer
Right Hinge

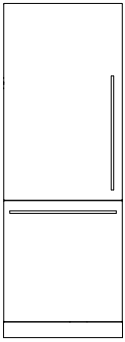

RS7621WL
762mm Refrigerator-Freezer
Left Hinge

BEFORE YOU BEGIN

- Ensure the installer has completed the final checklist in the installation instructions.
- Read this guide, taking special note of the Safety and Warnings section.
- Remove all packaging and dispose of it responsibly. Recycle items that you can.

Refrigerator Compartment

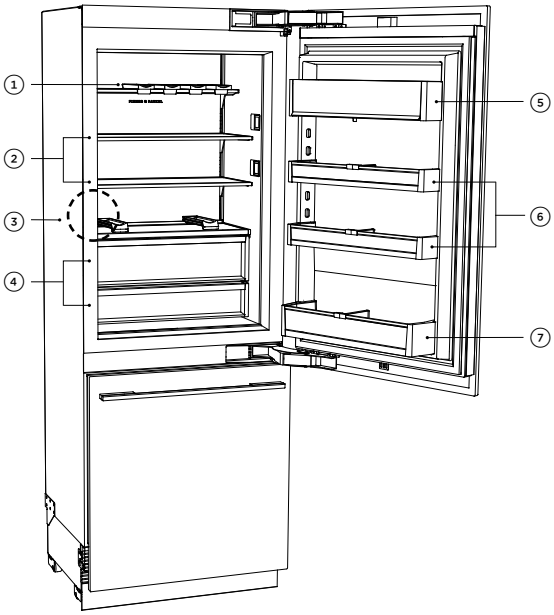

Refrigerator features

1. Bottle racks
2. Shelving
3. Internal water dispenser
4. Soft close bins with humidity control
5. Dairy compartment
6. Door shelf
7. Gallon shelf

Freezer Compartment

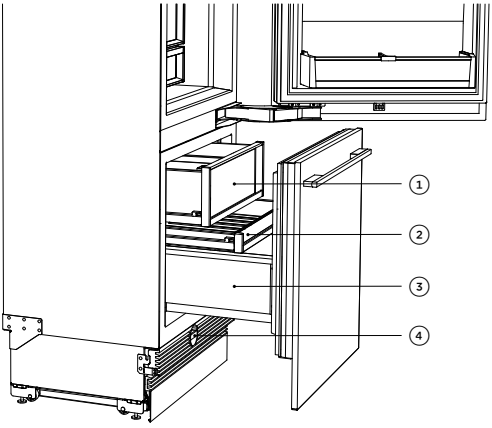

Freezer features

1. Top bin with ice storage
2. Mid tray
3. Large bottom steel bin
4. Water filter

CONTROL PANEL

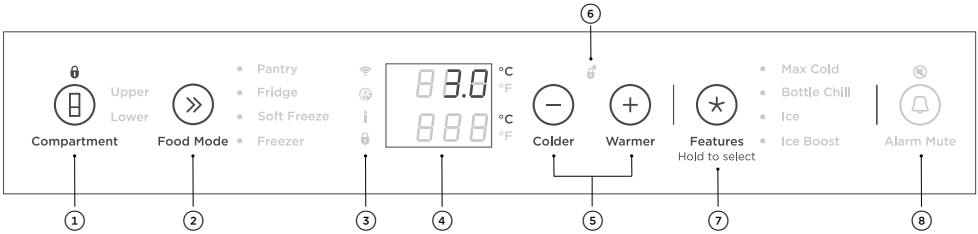

1	**COMPARTMENT** activates the control panel when pressed. Allows you to select the compartment to adjust the temperature. • **UPPER** to indicate the refrigerator compartment is selected. • **LOWER** to indicate the freezer compartment is selected.
2	Allows you to select the food mode for the selected compartment.
3	WiFi illuminates when functionality is activated.
	Illuminates when the water filter needs replacement.
	Illuminates to indicate that Sabbath mode is activated.
	Illuminates to indicate that the keys on the control panel are locked. When the door is closed, the display is automatically locked.
4	Displays the set temperature of the compartments. To change between Celsius and Fahrenheit on the display: Press + and » together for 4 seconds.
5	Allows you to adjust the temperature of the selected compartment.
6	Press − and + keys for 4 seconds to lock the water dispenser. When locked, the icon will illuminate.
7	Allows you to scroll and select features: • Max Cold • Bottle Chill • Ice • Ice Boost
8	This button has a dual function—it allows you to deactivate door alarms for 20 minutes and/or mute key tones on the control panel.

STORAGE FEATURES

REFRIGERATOR COMPONENTS	
Fruit and vegetable bins/Slim bin with humidity control lids	Separate fruits and vegetables to prevent the ethylene-sensitive produce from ripening too quickly-helps to extend their storage life.
	Also used for storing deli items and beverages, or for defrosting foods.
Cantilever glass shelving	Heat-treated safety glass
	Can be removed and positioned at heights to suit your storage requirements.
Dairy shelf and door shelves	The top door shelf is a dairy compartment for storing butter and cheeses.
	The middle shelves are designed for general items, condiments and drinks.
	The bottom shelves are designed to store large drinks or those drinks you require frequent access to.
	Clear windows give ultimate visibility to what is being stored in the door shelves.
	Adjustable door shelves with dividers.
Single bottle holders	Can be placed along the length of any shelf (except half-depth cantilever shelves) to store a variety of bottles.
Half-depth cantilever shelf bottle holders	Can be placed only on half depth cantilever shelves to store a variety of bottles.
	Store bottles with the neck facing the front of the refrigerator.
	Unused bottle holders can be stacked on top of one another to maximize shelf space.

FREEZER COMPONENTS	
Top bin with removable ice container and hygienic ice scoop	For storing large or small frozen food items.
Mid tray	For storing smaller food items.
Large bottom steel bin	For storing multiple frozen food items or large food items.

FOOD MODES

Variable temperature zones

Separate food modes, in both fridge and freezer, allow you adjust the temperature independently for optimal storage.

Refrigerator

FOOD MODES	DESCRIPTION	TYPES OF FOOD TO STORE
Pantry (12°C)	Pantry mode provides a cool, dark place for a wide variety of foods that perish quickly or may spoil at room temperature, but are too sensitive to be stored at normal refrigerator temperatures.	Bananas, avocados, tomatoes.
		Dry food items such as grains, flours, sugars, crackers, cereal, baked goods, tortillas, wraps and breads.
		Dry food items such as grains, flours, sugars, crackers, cereal, baked goods, tortillas, wraps and breads.
		Wine
Fridge (3°C)	The ideal mode for fresh, everyday foods. This mode offers a higher relative humidity than many other refrigerators allowing fresh foods such as fruits and vegetables, meats and cheeses to stay fresher for longer.	Fruit and vegetables, dairy products, jams and chutneys/preserves, meats and drinks.

Freezer

FOOD MODES	DESCRIPTION	TYPES OF FOOD TO STORE
Soft Freeze (-9°C)	Soft Freeze mode is an extension of your refrigerator, extending the shelf life of perishable items while maintaining the quality. Soft Freeze mode allows easy portioning of food and the ability to heat, cook or serve foods straight from the compartment without waiting for it to thaw.	Meats, seafood, soups, sauces, pureed foods, bread, desserts and pastries.
		Note: Soft Freeze mode is not recommended for storage of creamy desserts such as ice cream.
Freezer (-18°C)	Freezer mode is for general frozen food items that require storage between 1–12 months. For frozen food items that may need to be stored for longer periods, press the minus (-) button to reach -25°C. This extends the shelf life of general frozen items by up to 6 months.	Meat, poultry, seafood, pre-cooked foods and leftovers, some fruits and vegetable, ice cream, and other frozen desserts.
		General frozen food items that are required to be stored for extended times, eg larger cuts of meat.

SPECIAL FEATURES

Max Cold

Boosts the cooling speed of the selected compartment by dropping to its coldest temperature for a set time, dependent on the food mode in use. We recommend using 'Max Cold' when you are adding food items to your appliance, such as after grocery shopping. This feature will ensure the food is chilled/frozen within the shortest period of time, locking in the freshness and extending the shelf life of your food.

Bottle Chill

This feature allows you to rapidly chill your beverages in the freezer for 15 minutes. Depending on the size of your beverage, the default time may not be enough to chill your beverage. If your beverage is not cold enough after the set time, return it to the compartment and reset the 'Bottle Chill' feature.

Ice*

Turns on your automatic ice maker. This feature is only available in the freezer compartment.

Ice Boost*

Increases ice production by lowering the freezer to the coldest set point, and deactivates automatically after 24 hours.

* This feature is not available if the compartment is set to 'Soft Freeze'. If ice making is turned on and the food mode is changed to 'Soft Freeze' any ice that is already in the ice bin may melt and form clumps.

Temperature control

- Once you turn on your refrigerator for the first time, the compartments will automatically default to the recommended temperature setting.
- The control panel enables you to change and control the temperature of all compartments accurately and independently.

Adjusting the temperature — Refrigerator compartment

1

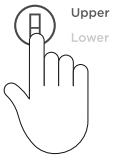

Selecting the compartment

Press ⓘ to select **UPPER** compartment.

Food modes **PANTRY** and **FRIDGE** are illuminated.

2

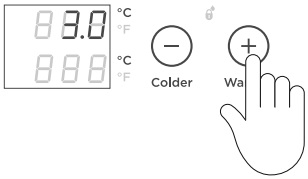

Adjusting the temperature

Press **+** to increase the temperature of the selected food mode.

Press **—** to decrease the temperature of the selected food mode.

Adjusting the temperature — Freezer compartment

1

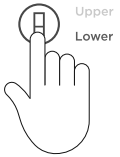

Selecting the compartment

Press ⓘ again to select **LOWER** compartment.

Food modes **SOFT FREEZE** and **FREEZER** are illuminated.

2

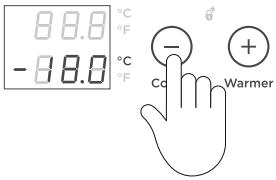

Adjusting the temperature

Press **+** to increase the temperature.

Press **—** to decrease the temperature.

✳ Selecting Features

1



Press ✳ to scroll through the available **FEATURES** for the compartment and food mode you have selected.

To activate:

Select from the list by scrolling through and stopping at your preferred feature.

A blinking light indicates the current feature when scrolling through the list.

Press ✳ for 2 seconds to activate.

Key lock

Allows you to disable the buttons on the control panel. Suitable when cleaning your appliance. It is automatically activated when the refrigerator door opens.

1



To deactivate:

Press ⊟ for 2 seconds. The 🔒 icon will not illuminate.

2



To activate:

Press ⊟ for 2 seconds. The 🔒 icon on the control panel will illuminate.

Door alarm

- If the refrigerator compartment door is left open, the alarm will beep after 90 seconds.
- If the freezer compartment drawer is left open, the alarm will beep after 60 seconds.
- If the door remains open, subsequent beeps will sound every 30 seconds for 5 minutes.
- If the door remains open for 5 minutes or longer, an alarm will sound continuously and the interior compartment light(s) will turn off.

Alarm mute

1



To activate:

To activate, press 🔔 once. The light above 🔔 will illuminate to indicate the refrigerator is muted.

ALARM MUTE will deactivate after 20 minutes. Press 🔔 To deactivate manually,

Closing the door also deactivates the **ALARM MUTE.**

Key mute

1



To activate:

Press 🔔 for 2 seconds, a single beep will sound to indicate key mute is activated. All key sounds are now muted.

Door alarms and the **BOTTLE CHILL** alarm are still operational.

Sabbath mode

1

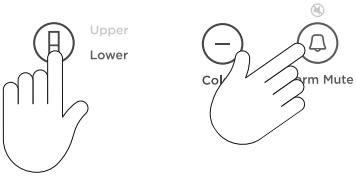

To activate:

Press ⊟, 🔔 and — together for 4 seconds.

The 🕯 icon on the control panel will illuminate. When activated, the display, all alarms and lights are deactivated for 80 hours.

To deactivate manually:

Press ⊟, 🔔 and — together for 4 seconds.

Note: If you turn off your appliance while in Sabbath mode, it will resume automatically once the appliance is switched on again.

Using the internal water dispenser

The water dispenser is located inside at the left side wall of the refrigerator compartment.

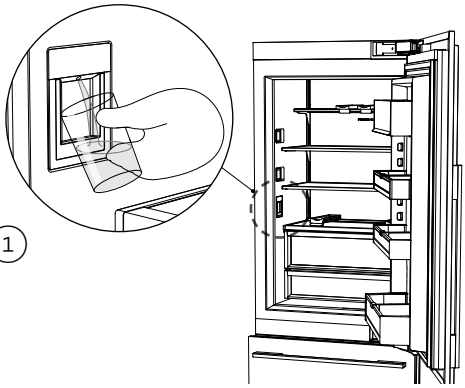

1

To dispense water, gently press the dispensing pad with a glass or container.

To stop the flow of water, simply pull your glass or container away from the dispensing pad.

Pressing hard against the dispensing pad will not increase the flow or dispense more water.

Using the automatic ice maker

Before turning on your automatic ice maker, the system must be flushed to remove any impurities or trapped air in the filter system.

1



Turn your Ice maker on, select **LOWER COMPARTMENT** > **FREEZER** > **ICE.**

2

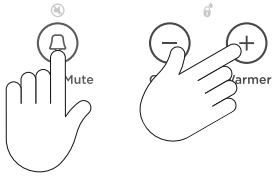

Press the 🔔, — and + together for 4 seconds then close the doors.

The ice tray will have filled with water.

- Repeat step ② to remove dust in the ice tray collected during manufacture and transport.

3

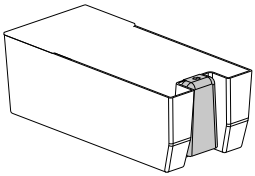

Remove the bin and empty the water. Dry the bin and return it correctly.

Once your ice maker is turned on, the first bin of ice may be discoloured. This discolouration is normal during the flushing process and is not harmful. Discard the first full bin of ice made. Your ice maker is now ready to use.

Water filter

The water supplied to your appliance is filtered through a water filter to remove impurities. The water filter is located at the bottom front of your appliance, and must be replaced every 6 months. Refer to your installation guide for instructions on how to remove and install the water filter.

- A water filter icon on the control panel illuminates when the filter needs replacement.
- Replacement filter cartridges can be purchased online from fisherpaykel.com or by calling Fisher & Paykel Customer Care. Details of the replacement filter cartridge are labelled on the cartridge. Instructions on how to install your replacement water filter are provided with the filter.

Changing the water filter cartridge

Guidance of how to replace your water filter and reset your indicator icon can be found at fisherpaykel.com/water-filter.

Resetting the filter indicator

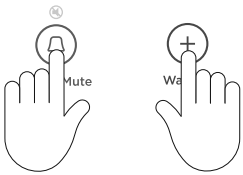

Press and + together for 4 seconds.
The on the control panel will turn off when reset.

Flushing through the water dispenser

① Press the water dispenser pad to dispense 1 gal (4L) of water.
   - Harmless carbon residue may be dispensed with water during the flushing process.

② Wait for 4 minutes before dispensing again.

③ Dispense 4L of water then wait another four minutes.

④ Dispense another 4L of water. Your water dispenser is ready for use.

⑤ Water will continue to drip from the dispenser for a few more days after installation.

Max Cold

1

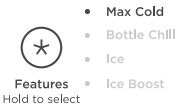

Press ✶ to select **MAX COLD.** A blinking light indicates **MAX COLD** is selected.

2



To activate:

Press ✶ for 2 seconds to activate.

Bottle Chill

1

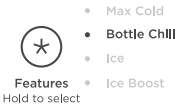

Press ✶ to select **BOTTLE CHILL.** A blinking light indicates **BOTTLE CHILL** is selected.

2



To activate:

Press ✶ for 2 seconds to activate.

An alarm will sound after 15 minutes has elapsed to indicate that beverage can be removed.

To mute the alarm, press ✶ once.

Ice*

1

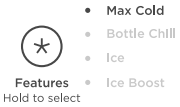

Press ✳ to select **ICE**. A blinking light indicates **ICE** is selected.

2



To activate:

Press ✳ for 2 seconds to activate. A beep will sound to indicate **ICE** is active.

To mute the alarm, press ✳ once.

Ice Boost*

1

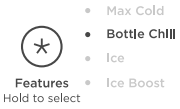

Press ✳ to select **ICE BOOST.** A blinking light indicates **ICE BOOST** is selected.

2



To activate:

Press ✳ for 2 seconds to activate. An alarm will sound to indicate **ICE BOOST** is active.

An alarm will sound again after 15 minutes as reminder to remove your beverage.

*If ice making is turned on and the food mode is changed to **SOFT FREEZE**, any ice that is already in the ice bin may melt and form clumps.

WIFI CONNECTION

Your appliance can be connected to your home wireless network and operated remotely using the FISHER & PAYKEL app.

Getting started

- Ensure your home WiFi network is turned on.
- You will be given step by step guidance on both your appliance and mobile device.
- It may take up to 10 minutes to connect your appliance.

On your mobile device:

① Download the FISHER & PAYKEL app from www.fisherpaykel.com/connect
② Register and create an account.
③ Add your appliance and set up the WiFi connection.

Exterior cleaning

The condenser coils of your Integrated Column require periodic cleaning by a Fisher & Paykel trained service technician.

Toe kick grilles and filter

Your Integrated Column is fitted with a toe kick grille to protect the internal working components. We recommend cleaning the grille and filter in conjunction with changing your water filter cartridge (every 6 months).

① To maximize operating efficiency, keep ventilation openings clear of obstructions by regularly vacuuming the flooring in front of your appliance.

② More frequent cleaning may be necessary for dusty homes or those with pets shedding hair.

Interior cleaning

Clean all surfaces with a mild liquid detergent dissolved in warm water and a soft cloth. Rinse with clean water and dry with a clean, lint-free cloth.

Do not use harsh chemicals, abrasives, ammonia, chlorine, bleach, concentrated detergents, solvents or abrasive scouring pads on any part of your appliance. Some of these chemicals may damage your appliance.

1

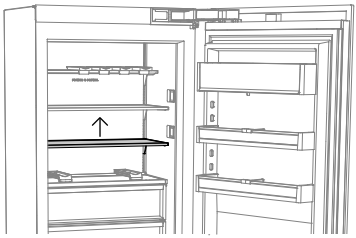

Cantilever glass shelves

To remove, hold the front and back edge of the shelf firmly.

Push the shelf up vertically to dislodge from back support lugs.

2

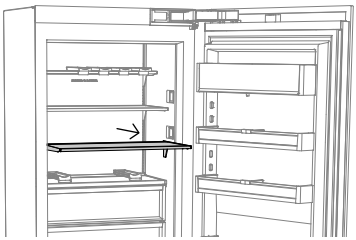

Pull the shelf towards you.

3

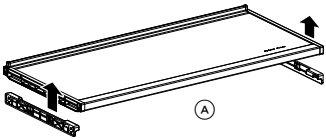

Humidity control lids — Fixed shelf

To remove, hold both sides of the shelf and lift straight up to unclip from the runners (Ⓐ).

4

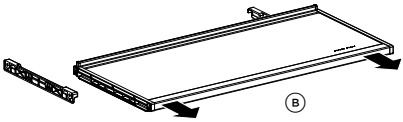

Pull the shelf towards you (Ⓑ).

6

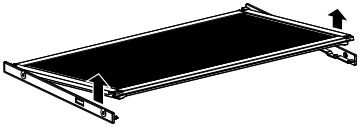

Humidity control lids — Slim bin

To remove, lift up the front edge of the shelf (Ⓒ).

7

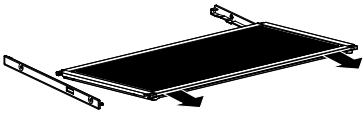

Pull the shelf towards you to unclip from the runners (Ⓓ).

Removing the top bin

The runners are pre-lubricated to help open and close the bins. Do not remove the grease from the runners to maintain its smooth function.

1

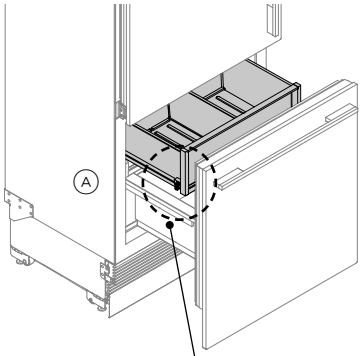

To remove a bin, extend the bin on its runners (Ⓐ), and empty the bin.

2

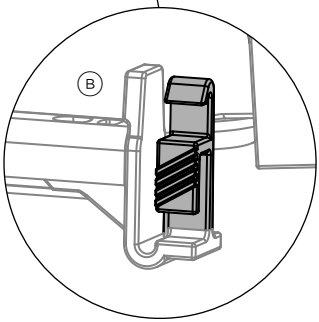

Push the securing tabs on both sides of the bin corners, then push the bin firmly upwards to dislodge from the runners (Ⓑ).

3

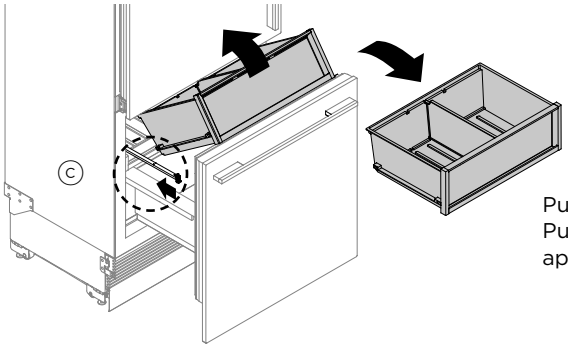

Pull the bin towards you to remove. Push both runners back into the appliance (Ⓒ).

Returning the top bin

1

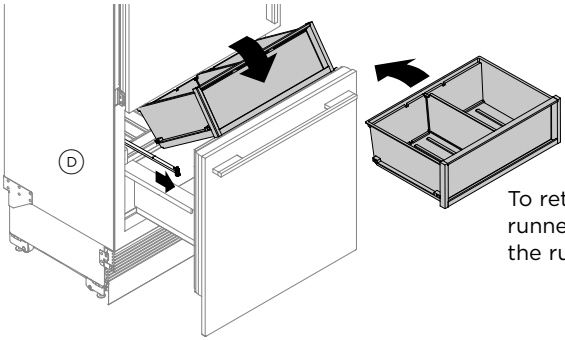

To return the bin, extend the runners and place the bin on top of the runners (Ⓓ).

2

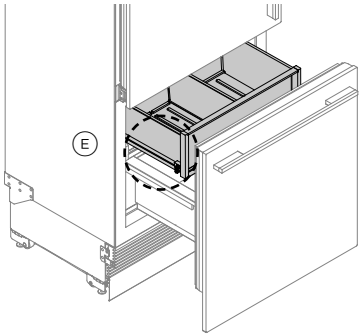

Push the bin slowly onto the securing tabs until you feel it clip onto the runners (Ⓔ).

Ensure the bin tabs are clipped securely onto the runners before use.

Removing the bottom steel bin

1

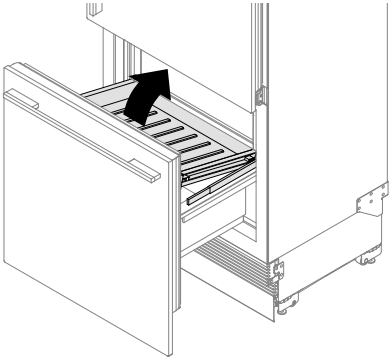

Open the bottom drawer fully.

Unclip the mid tray from the sliders and lift the front of the tray.

2

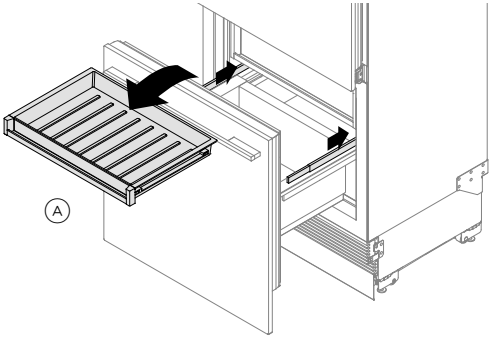

Remove the mid tray (Ⓐ) and retract the sliders.

3

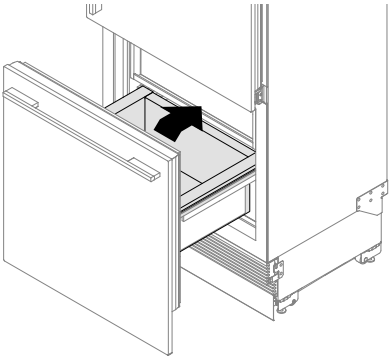

Lift the steel bin slightly and slide back inside the appliance to unseat the steel bin from seating pockets.

When removing the steel bin, we recommend to wear protective gloves as the bin is cold to touch.

4

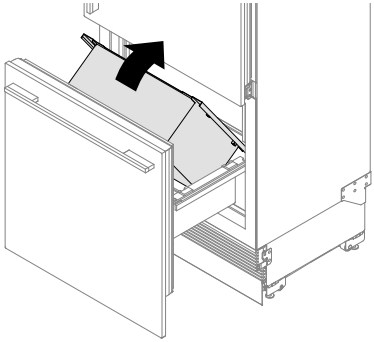

Tilt the steel bin towards the appliance.

5 Ⓑ

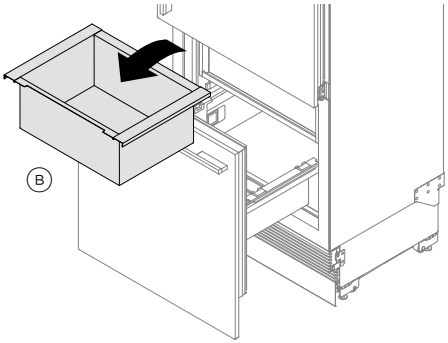

Lift the steel bin (Ⓑ) upward to remove.

Returning the bottom steel bin

1

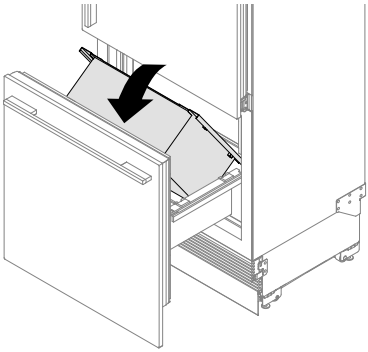

Open the bottom drawer fully.

Insert the rear end of the steel bin at an angle into the bottom drawer.

2

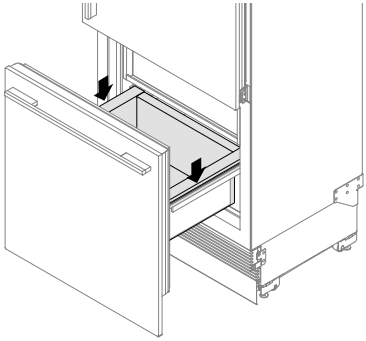

Lower the front end of the steel bin ensuring the sides are sitting on the sliders.

3

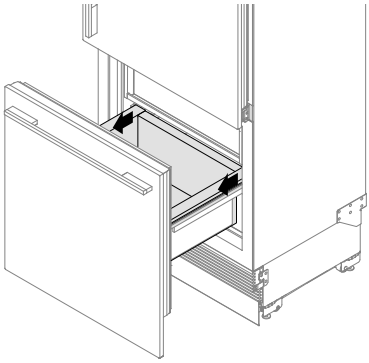

Slide the steel bin slightly forward to locate into the seating pockets.

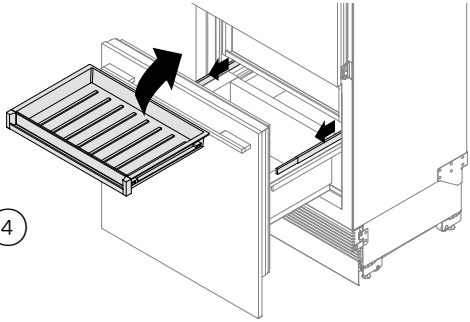

4

Pull out the sliders and insert the rear end of the mid tray into the appliance

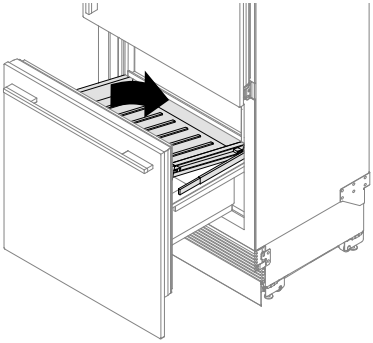

5

Ensure the sides of the mid tray are seated on the sliders.

Clip the mid tray to the sliders to lock in place.

Before leaving for a Holiday/vacation:

① Turn the ice maker to OFF on the control panel.
② Shut off the water supply to the appliance.

On return from a Holiday/vacation:

① Turn on the ice maker. Discard the first full bin of ice.

For best food care

- Store only high-quality, fresh food in your appliance.
- Store perishable foods in the appliance immediately after purchase. Storing at room temperature increases the rate of deterioration and can allow harmful microbial growth.
- Foods such as meat, poultry and seafood should be well wrapped or sealed in suitable packaging to prevent dehydration, colour deterioration, loss of flavour, and transfer of odour.
  Note: We recommend storing these foods on the bottom shelf of your appliance or in one of the bins to prevent potential spills and cross-contamination with other foods.
- Ensure hot foods and beverages are cooled sufficiently before placing them into the appliance. Hot items may cause other foods to warm to unsafe temperatures. It may also cause sealed items to sweat/condensate — which is undesirable.
- Beverages are best stored standing upright in the door shelves or on the bottle racks provided.
- Ensure raw and cooked foods are stored separately to avoid cross-contamination.
- Consume food items within the recommended storage times. Discard foods that show sign of spoilage.
- Keep door openings to a minimum to maintain optimum storage temperatures inside your appliance.
- We recommend using MAX COLD when you are adding food items to your appliance, such as after grocery shopping. This feature will ensure the food is chilled/frozen within the shortest period of time, locking in the freshness and extending the shelf life of your food.
- A refrigerator will keep food safe for up to 4 hours during a power outage. Keep the door closed as much as possible. Discard refrigerated perishable food such as meat, poultry, fish, eggs, and leftovers after 4 hours without power.

Items stored in your refrigerator

- Dairy items such as butter and cheeses should be stored in the covered door shelf to minimize any transfer of odour or odour absorption from other foods.
- Eggs should be stored in their carton to avoid absorption of strong odours through their porous shell structure.

Items stored in your freezer

- We recommend cooling carbonated beverages only when the BOTTLE CHILL function is active.
  Note: Do not store carbonated drinks without this function in the freezer. Failure to remove beverages could lead to freezing liquid and the likelihood of bottle/can explosion.
- Ensure air is removed from packaging to avoid large formation of ice crystals and prevent freezer burn.
- To maintain freshness and quality, we recommend defrosting foods in the refrigerator. Ensure partially or fully defrosted foods are never re-frozen — cook immediately.

Faults

- Count the number of beeps made when the fresh food compartment door is opened.
- Record the number and sequence of temperature lights displayed on the internal control panel and contact a Fisher & Paykel trained and supported service technician in order to repair the fault. You can do this by going online to fisherpaykel.com or by contacting our Customer Care Centre.
- To silence the fault alarm press any button on the **internal** control panel.

Normal appliance sounds

Integrated Columns are designed to have excellent energy ratings and cooling performance. As a result, you may hear sounds somewhat different to your old refrigerator.

WARNING/ SOUND	DESCRIPTION
Fan air flow	ActiveSmart™ refrigerators have fans which change speed depending on demand. During cooling periods, such as after frequent door openings, fans circulate the cold air in the refrigerator and freezer compartments producing some air flow sound. This is quite normal.
Cracking or popping	This may occur when the automatic defrost function is operating.
Running water	This is the liquid refrigerant in the system and can be heard as a boiling or gurgling noise.
Hissing sound after closing the freezer door	This is due to the pressure difference between the warm air that has entered the cabinet and suddenly cooled, and the outside air pressure.
Humming	This is the compressor running and is quite normal.
Gasket	Normally occur over time due to a build up of dirt and/or grime. See ‘Exterior cleaning’ section.
Ice maker and water dispenser	Motor operation (low humming).
	Running water as the ice maker and/or water tank fills.
	Water valve opening and closing (hissing sound).
	Loosened from the ice molding tray (cracking).
	Ice dropping into bin (clunking).
Other sounds	Cabinet not level
	Floor uneven or weak
	Bottles or jars rattling on shelves

TROUBLESHOOTING

If there is a problem with your appliance, please check the following points before contacting your local Fisher & Paykel trained and supported service technician or the Customer Care Centre.

Product parts and accessories can be purchased through the Fisher & Paykel Customer Care Centre, or online at fisherpaykel.com (this service is available to selected markets only).

PROBLEM	POSSIBLE CAUSES	WHAT TO DO
Appliance does not operate	No electricity at power outlet.	Check that the plug is correctly connected and power switched on.
		Check another appliance at the same outlet.
		Check house fuse.
Light not working	Light not functioning.	The lighting cannot be serviced by the user. Contact your Fisher & Paykel dealer or trained and supported service technician.
	Appliance not working.	Check appliance is turned on at the wall or at the isolating switch.
Light and display not working	Product in Sabbath mode.	Press ⊟, — and 🔔 together for 4 seconds.
Storage compartments too warm	Temperature setting not correct.	See 'Temperature control' section of this User guide.
	Frequent door openings.	Minimize door openings to allow temperature to stabilize.
	Large amount of food has been recently added.	Select **MAX COLD** features to assist in lowering the temperature quickly.
Food freezing in the refrigerator	Temperature setting is too cold.	Increase the temperature setting. See 'Temperature control' section of your user guide.
	Food placed directly in front of air outlets.	Move chill sensitive foods away from the air outlets.
Unfamiliar noises	Cabinet not stable or level.	See Installation guide supplied with this appliance.
	Freezer is defrosting.	This is normal.
Ice maker sounds	Normal ice maker operation.	See 'User warnings and sounds' section.
Food Mode is not available	Not all combinations of food modes are available in all compartments.	Try to select the desired Food Mode in a different compartment.

TROUBLESHOOTING

PROBLEM	POSSIBLE CAUSES	WHAT TO DO
When the appliance door is opened 4 rapid beeps sound and a code is displayed on the control panel		Record the code on the control panel and contact Customer Care Centre.
Water in the vegetable bins	Condensation is formed by the water produced by fruit and vegetables.	A small amount of condensation is beneficial for fruit and vegetable storage.
		Wipe out water with a cloth.
Exterior of cabinet is warm	Note: **This is normal.**	
Condensation on outside of appliance	Not unusual during periods of high humidity.	Wipe dry.
Condensation/ice inside compartment	Frequent or long door openings.	Minimize door openings.
	Door gasket leaking.	Check and clean door gasket seal.
	Not unusual during periods of high humidity.	Wipe dry.
	Door not closing tightly.	Arrange items in the compartment so door can close tightly.
	Doors not aligned.	Call a service technician.
Bin does not slide in and out evenly	Packaging trapped.	Check to ensure no food or packaging is trapped behind the tray/bin.
Door not closing	An obstruction is blocking door closing.	Move obstruction.
	Appliance not installed correctly.	Refer to your Installation guide supplied with this appliance to ensure your appliance has been installed correctly.
Freezer door will not open	The door has been recently opened.	Wait 30 seconds and try again.
Small ice cubes	Water line is blocked/restricted..	Check the external water line is not kinked/squashed. If it is not kinked/ squashed contact Customer Care to arrange a technician to check the internal water line.
Frozen food items are soft or melting		Remove items and place in another freezer or cooler and call Customer Care immediately.

TROUBLESHOOTING

PROBLEM	POSSIBLE CAUSES	WHAT TO DO
Different sizes of ice cubes	Cabinet may not be level	Adjust level of the cabinet.
Automatic ice maker does not work	Ice maker has not been turned on.	Switch on ice maker, see 'Using the automatic ice maker' section.
	Water supply turned off or not connected.	Connect the water supply.
	Freezer compartment not working.	Contact Customer Care Centre.
	Water pressure too low.	Check water pressure.
	Water line is blocked/restricted.	Check water line for kinks/squashing.
	Filter is clogged.	Water filter may need replacing.
	Ice cubes sticking in ice bin.	Remove ice storage bin, loosen cubes and remove clumped ice. Replace ice storage bin.
	The food mode is set to **SOFT FREEZE**.	Change the food mode from **SOFT FREEZE.**
Ice cubes taste tainted	Unsealed packages may be transmitting odour/taste.	Discard ice cubes and clean ice storage bin. See 'Interior cleaning' section.
		Wrap or cover strong smelling foods.
	Poor taste from incoming water.	Replace filter cartridge. Product parts and accessories can be purchased through our Customer Care Centre.
Slow ice cube freezing	Door may have been left ajar.	Close door.
	Freezer compartment set too warm.	Turn temperature to a colder setting. See 'Temperature control' section.
	Long freezer door openings.	Gently tap ice to unstick or, if large clumps occur, empty ice bin and make new ice.
	High ambient temperature.	
	Ice bin left out of freezer compartment for a length of time.	
	Ice will stick together over time.	
Ice is discoloured	Water filter has not been flushed.	Refer to your installation guide supplied with your appliance for details on how to flush your water filter.

TROUBLESHOOTING

PROBLEM	POSSIBLE CAUSES	WHAT TO DO
Internal water dispenser not working	Internal water dispenser locked	Deactivate 'Water Dispenser Lock' off by holding down "Colder" and "Warmer" keys for 4 seconds
	Water supply off	Check water supply
	Water pressure low	Check water pressure
	Water line kinked/ squashed	Check for kinks/ squashing
	Filter is clogged	Water filter may need replacing

EUROPEAN DIRECTIVE 2012/19/EU ON WASTE ELECTRICAL AND ELECTRONIC EQUIPMENT (WEEE)

EU This appliance is marked according to the European Directive 2012/19/EU on Waste Electrical and Electronic Equipment (WEEE). By ensuring this product is disposed of correctly, you will help prevent potential negative consequences for the environment and human health, which could otherwise be caused by inappropriate handling of this product.

The symbol  marked on the serial plate, or on the documents accompanying the product, indicates that this appliance cannot be treated as household waste. It shall be handed over to the applicable collection point for the recycling of electrical and electronic equipment. Disposal of the appliance shall be carried out in accordance with the local environment regulations for waste disposal and ensure the refrigerant circuit is not damaged.

For more detailed information about treatment, recovery and recycling of this product, please contact your local city office, your household waste disposal service or your Fisher & Paykel retailer/dealer from whom you purchased this product.

SERVICE AND WARRANTY

For details of your manufacturer's warranty and contacts for servicing, refer to your separate service and warranty book provided with your appliance.

This product has been designed for use in a normal domestic (residential environment). This product is not designed for any commercial use. Any commercial use by the customer will affect this products manufacturer's warranty.

Register your product with us so we can provide you with the best service possible.
To register your product visit our website: fisherpaykel.com

Complete and keep for safe reference:

Model _____

Serial No. _____

Purchase Date _____

Purchaser _____

Dealer _____

Suburb _____

Town _____

Country _____

FISHERPAYKEL.COM

© Fisher & Paykel Appliances 2020. All rights reserved.

The models shown in this guide may not be available in all markets and are subject to change at any time.

The product specifications in this guide apply to the specific products and models described at the date of issue. Under our policy of continuous product improvement, these specifications may change at any time.

For current details about model and specification availability in your country, please go to our website or contact your local Fisher & Paykel dealer.

863030B 05.20