ENGEL

Fridge / Freezer / Warmer

with

DIGITAL TEMPERATURE CONTROL

MODEL

MHD13F-DM

OWNER'S MANUAL

SPECIFICATION

MODEL	MHD13F-DM
CAPACITY	13L
OUTER DIMENSIONS	442×284×372 (W×D×H)
INPUT RATING	VOLTAGE DC 12/24V
(FRIDGE or FREEZER)	3.0/1.5A
(WARMER)	2.5/1.3A
REFRIGERANT	HFC-134a
WEIGHT	APPROX. 11.5kg

DESIGNATION OF PARTS

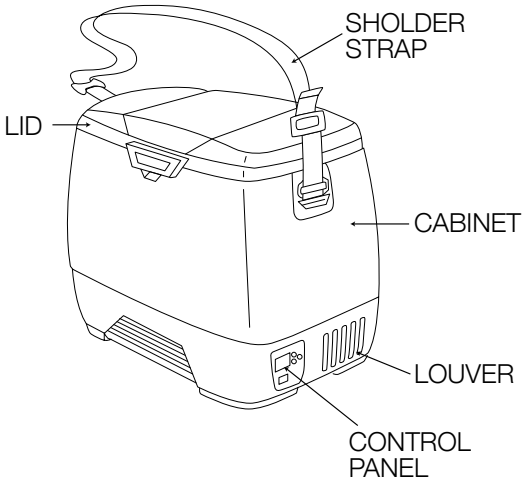

INSTALLATION

Though it will operate satisfactory for long period of up to 30°off level, the product should be installed on a level and solid surface. Make sure the product is not in direct sunlight (Fig 1), near a gas stove, a heater, or any other heat-generating appliances.

To achieve good cooling performance and less current consumption, adequate ventilation for product is needed. Install the product at least 150mm or more away from the wall. (Fig 2)

Avoid installing the product close to a kitchen sink or water faucet.

The product has been thoroughly cleaned prior shipment from the factory.

It is advisable, however, to clean the interior once again before use.

Clean the interior with a damp cloth moistened in warm water and wipe with a dry cloth.

=CAUTION=

- ✻ Never use the product to store gasoline or other inflammable vapors and liquids as these may cause explosion.
- ✻ Do not touch the evaporator and other metal parts of the cabinet with wet hands, as this may cause frostbite.
- ✻ Do not remove or modify any of the electrical parts as this may cause electric shock or damage to the product.

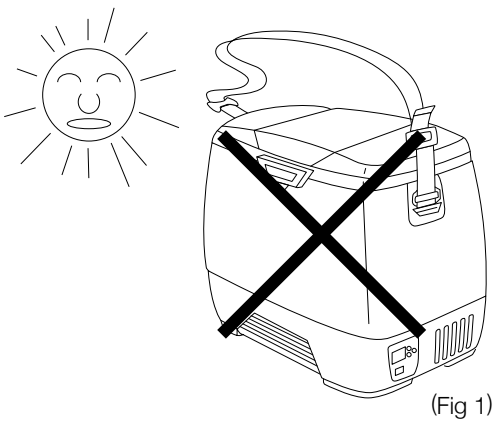

(Fig 1)

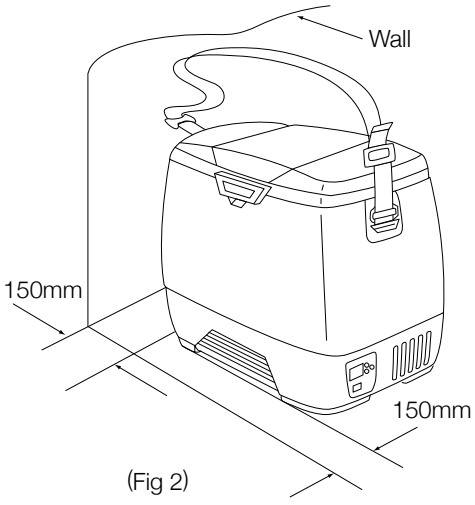

(Fig 2)

* TO ENSURE THE EFFICIENT OPERATION OF THE PRODUCT PLEASE ADHERE TO THE FOLLOWING:

1) Ensure that the lighter socket is clean and free from dust, corrosion or other foreign materials.

2) To adjust the plug setting, please refer to Fig 3.

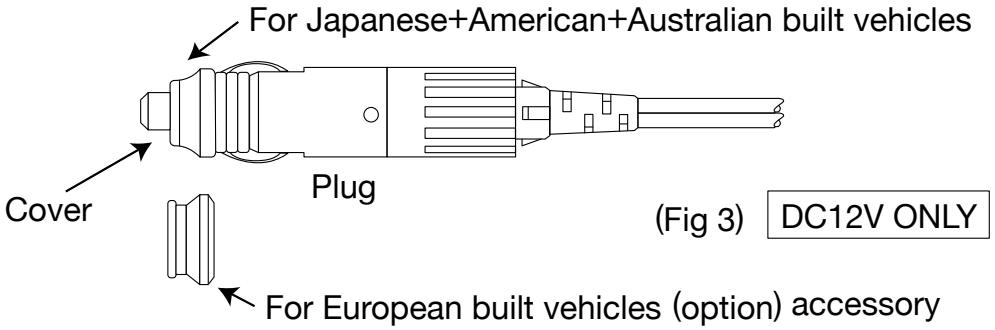

(Fig 3) DC12V ONLY

3) Insert plug securely into lighter/accessory socket to prevent it from coming loose. A loose DC connection may result in overheating and damage the vehicle lighter socket.

* This Plug is for DC12V only. DC24V is the other cord (option).
* Never use the product inside a refrigerator / freezer container vehicle.

Condensation can easily occur in the interior of the refrigerator / freezer container vehicle, causing water droplets to fall onto the product and damaging it.

ELECTRIC POWER SOURCES

The product operates on a 12 or 24 volt battery.

Ensure that the battery voltage corresponds with the voltage stated on the product label. If the voltage is too high it will damage the product. If it's too low, the cooling efficiency will be reduced, the running time will increase and the battery will be subjected to an increased load.

To operate the product, insert the cigarette lighter plug of the cord into the cigarette lighter socket of the vehicle.

To stop the refrigerator, remove the cigarette lighter plug of the cord from the cigarette lighter socket of the vehicle.

=IMPORTANT=

* DC BATTERY OPERATION (POLARITY GUARD)

In order to protect the power supply from damage caused by reversed polarity, the product is fitted with an automatic polarity guard. Should incorrect polarity be applied, the green power lamp will not light up and the product will not operate. If reverse polarity does occur, the special thermal fuse will blow and become inoperable. The serviceability of the special thermal fuse can only be checked by testing its continuity with a multimeter. Following the correction of the current supply, the green power lamp will light up and normal operation will resume.

* When not using the product, remove the cigarette lighter plug of the cord from the cigarette lighter socket of the vehicle to prevent unnecessary drainage of the car battery.
* Pay due attention to the correct polarity, the inner contact of cigarette lighter socket adapter must be connected to the positive supply, while the outer (negative) contact is connected to earth. (Most modern vehicles are wired on the negative earth system, but there may still be older vehicles and imported ones with the positive to earth connections).

DIRECT WIRING FOR PERMANENT VEHICLE INSTALLATION (OPTIONAL)

①TWIST THE LEAD WIRE

To further reduce the radio interference during DC operation, twist the negative and positive cables (use separate cables) together into a spiral form, between the battery and the DC outlet socket (see Fig 4)

②CONNECT PRODUCT DIRECT TO BATTERY

Any switches and leadwires for other electrical equipment should not be shared with the wiring between the product and battery. (Other equipment can generate high voltage pulses which may cause transistor damage to the fridge power supply.)

③TO PREVENT RADIO NOISE AND AVOID ABSORBING HIGH SURGE FREQUENCY.

Insert a capacitor. (10000μF) (see Fig 5)

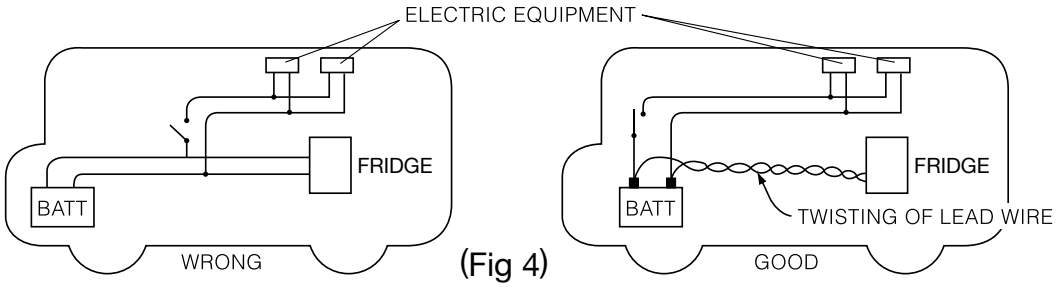

(Fig 4)

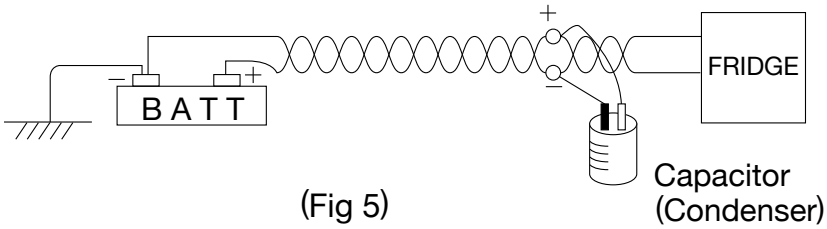

(Fig 5)

④ WIRE GAUGE IS IMPORTANT TO AVOID “VOLTAGE DROP”

Connect the product to the battery as follows:

Distance between product and battery	Wire Gauge
	DC 12/24 VOLT SERIES
Less than 6m	SWG#16 (AWG#14)
From 6m to 10m	SWG#14 (AWG#12)
More than 10m	Contact your Engel dealer for advice

⑤INSTALLING A FUSE IN THE WIRING CIRCUIT

To avoid burn out of wiring from battery to the product in the event of a short circuit, install 10A fuse in the wiring circuit, nearby the battery.

⑥Never connect the product directly to an engine generator.

The product will be damaged by high voltage and high surge pulse from the power source, please utilize an automatic voltage regulator for the product. Please contact your

ENGEL dealer if there are any questions regarding engine generators and the product compatibilities.

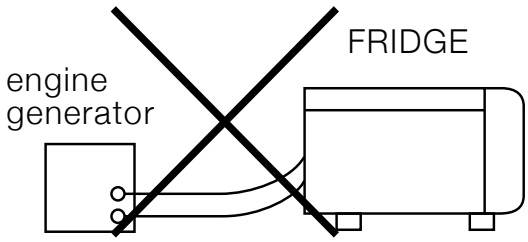

OPERATON

To operate the product – insert the cigarette lighter plug of the DC cord into the cigarette lighter socket of the vehicle.
The product will start operating once the power supply is ON

TEMPERATURE SETTING (see Fig 6)

Temperature range – Achievable temperature from -18 ~ 55℃ (0 ~ 131°F) at Ambient of 25°C (77°F).
The preset temperature is displayed when the LED starts blinking.
The approximate interior temperature of the cabinet will be displayed once the LED lights up.
When the “SET” button is depressed for 3 seconds (long push), the LED display will blink.
During this mode, the cabinet temperature can be selected by pressing the “UP” and ”DOWN” button.
Pressing/holding onto the “UP” and ”DOWN” buttons will continuously change the range of the temperature.

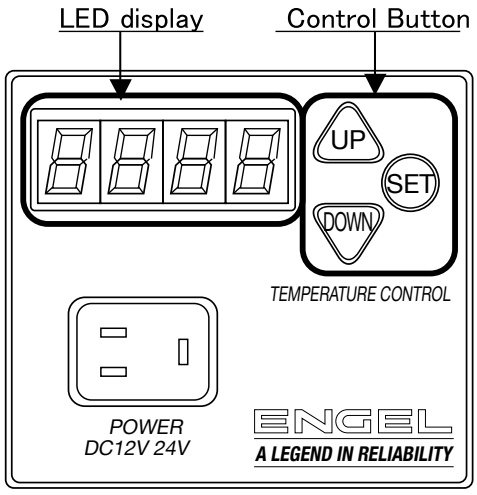

(Fig 6)

After pre-setting the temperature, the LED display will stop blinking (after a few seconds), indicating the temperature has been set (lock).
It is not necessary to reset the temperature again as the temperature has been stored.
The product will now operate at the selected temperature.

SELECTING TEMPERATURES (°C or °F).

It is possible to select between Celsius or Fahrenheit with product.
When the “SET” button is depressed for 3 seconds, the LED display will blink. Pressing the “SET” button during this mode will display the °C →°F →°C →°F change.
After pre-setting the temperature, the LED display will stop blinking (after a few seconds), indicating the temperature has been set (lock).
=CAUTION=
Control button, LED display and other Electrical products are no toys.
Please keep and use the product out of the reach of children.

TROUBLESHOOTING

Error message will be displayed if the voltage of the battery is low or in the event of any malfunctions – (see table below).
When error message is displayed, the unit will be on “standby mode”. Operations will stop.

Table

ERROR CODE	DESCRIPTION	SOLUTIONS
E-01	Abnormal Input Voltage	Check whether the power voltage is too low or too high.
E-02	Abnormal FAN connection	Check whether the fan works.
E-03	Abnormal Ambient Temperature (heat)	Check whether the ambient temperature is too high or whether the air-entrance is blocked. Make sure the Louver is not closed.
E-04	Ambient Temperature is too low	Check whether the ambient temperature is too low.
E-05	Abnormal cabinet temperature (heat)	Check whether the temperature inside the cabinet is too high.
E-06	Cabinet Temperature is too low	Check whether the temperature inside the cabinet is too low

If the problem still exists after solving it according to Table, it should be seen to by a specialist.
Never disassemble the refrigerator by yourself.

Inadequate repairs can lead to considerable hazards.

DEFAULT VALUES FOR BATTERY PROTECTION

12V cut out [V]	12V cut in [V]	24V cut out [V]	24V cut in [V]
10.5	12.5	22.7	24.7

LOCK (Padlock not included)

A padlock can be use to lock the door.
See Fig 7 picture on the right.
The diameter of the padlock hole is Φ 4.5mm.

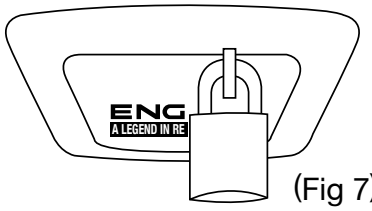

(Fig 7)

=CAUTION=
Be careful not to knock the protruding part of the latch against any objects or you may damage it.

PROPER USE

The product is suitable for use in cars, boats, caravans or RVs and has been designed to operate on angles of up to 30°off level.
The product can operate at ambient temperatures between -10 ～ 45°C (14 ～ 113°F)
The product is suitable for cooling as well as for warming foodstuffs.
To cool medicines, please check if the cooling capacity of the unit is suitable for cooling it.

BATTERY MAINTENANCE AND PRECAUTIONS

① Should the DC voltage of the product input terminals fall below the rated requirement; the cooling efficiency will immediately be reduced. Please pay due attention to the maintenance of your battery and keeping it in good condition.

② Quick chargers supply the battery with excess voltage in performing their intended function. If the product is kept connected to the vehicle power source, while a quick charger is connected to the battery, it could damage the product. Remove the DC cord plug from the cigarette socket of the vehicle.

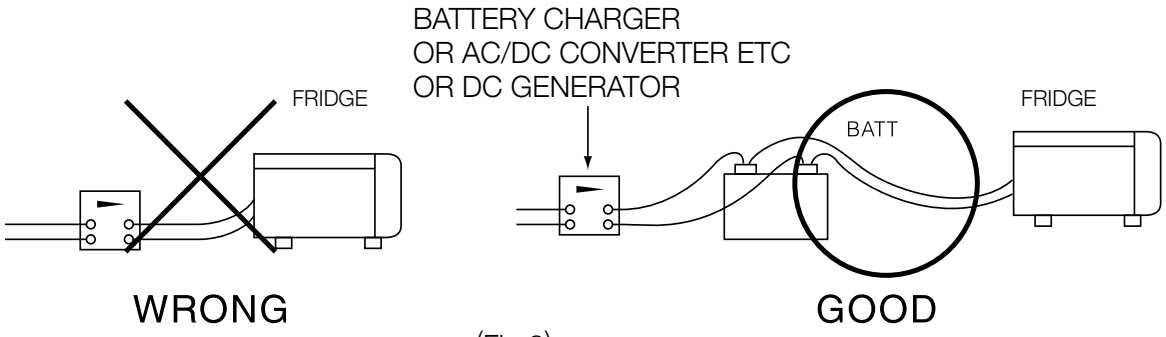

(Fig 8)

③ Never use a battery charger, transformer/rectifier, battery eliminator or AC/DC converter to power the product. Such equipment can, under certain circumstances, deliver current at a voltage which may damage the inverter. In order to use these devices always ensure that battery is connected in parallel between the charging equipment and the product.

REFRIGERATOR MAINTENANCE

CLEANING BOX AND DOOR

Clean the interior with a damp cloth moistened in warm water and wipe with a dry cloth.
Clean the exterior of the product with a damp cloth.
Clean the interior condenser to remove dirt (dust etc.) at regular intervals.
CAUTION: Never use a brush, powder soap, cleanser, acid, benzene, gasoline, or mineral thinners to clean the product, as these tend to leave scratches on the plastic coating and painting.

DEFROSTING

Due to the humidity within the cabinet, frost will form on the evaporator surface when it has been running for sometime. A layer of frost in excess of about 6mm (1/4in) has on adverse effect on the cooling efficiency of the product therefore, the evaporator must be defrosted regularly.
To defrost, turn off and unplug the product to allow for complete removal of frost from the evaporator.

CAUTION AND HOW TO REPLACE THE SPECIAL THERMAL FUSE

The refrigerator has a DC cord plug which incorporates a special thermal fuse which cuts off current during abnormal situations e.g. an over heated plug.

WARNING

Do not make use of conventional glass tube fuses. We recommend only using an Engel thermal fuse.
This special thermal fuse has a polarity. Please read the under mentioned instructions on how to replace the fuse and make sure to check the polarity connection is correct before replacing it.

HOW TO REPLACE (Fig 9)

1. Remove the cover at the tip of the DC cord plug by turning the black cover in the counterclockwise direction.
2. When removing the cover, the head terminal and the special thermal fuse are also removed at the same time.
3. Pull out the special thermal fuse from the metal head terminal.
4. Replaced the blown fuse with a new one after making sure that the polarity connection is correct.

=CAUTION=

・Use the special thermal Engel fuse made by SAWAFUJI at all times without fail.

・The special thermal fuse should be placed in the plug in the direction of the arrow as shown and it should be pointing in the direction of the head terminal (Fig 9)

5. Re-assemble the DC cord plug (reverse order of disassembly) and tighten the cover firmly.
6. Check whether the product is operating normally.

   If you encounter any further trouble, please contact your Authorized Engel dealer.

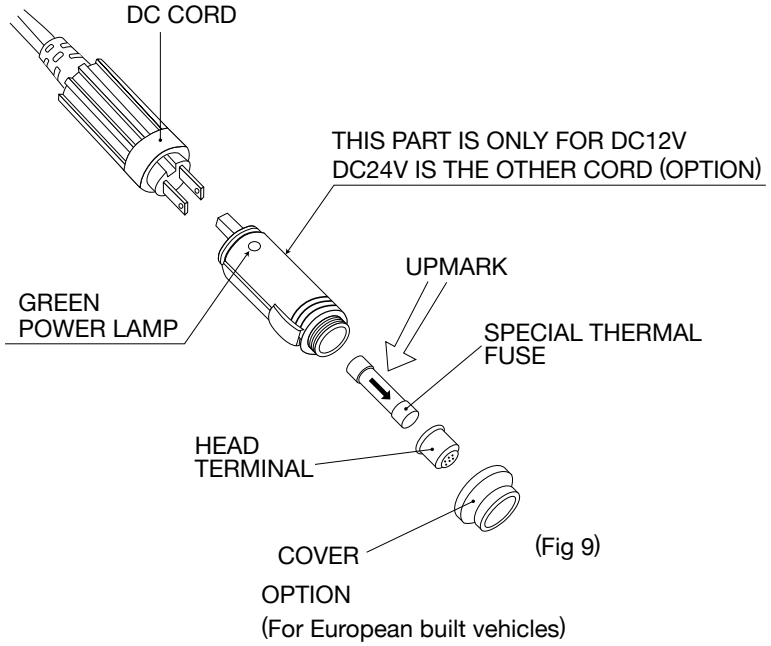

(Fig 9)

SHOULDER STRAP

Secure SHOULDER STRAP onto the product by referring to Fig 10.

1. Thread both ends of the SHOULDER STRAPS through holder A (on both sides of your ENGEL).
2. Then fasten both ends of the SHOULDER STRAPS onto holder B as shown on ② of Fig10.

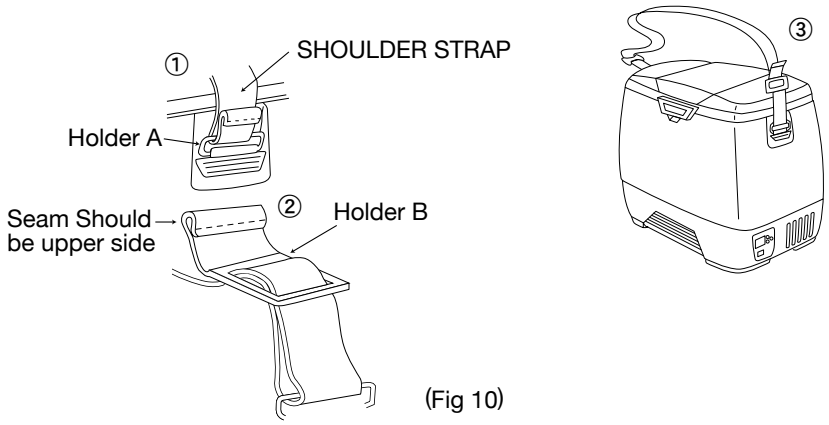

(Fig 10)