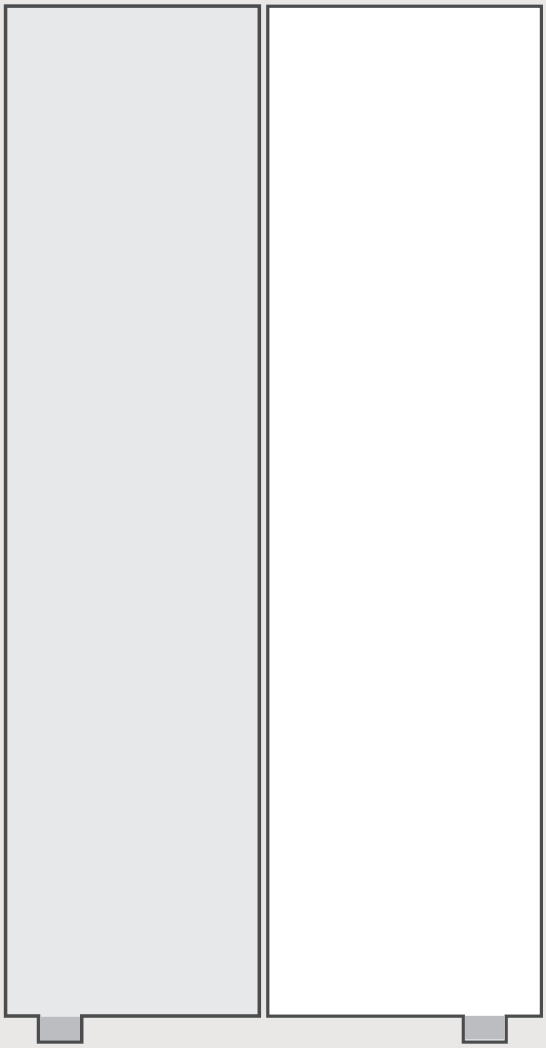

Refrigerator

SIDE BY SIDE SERIES

USER MANUAL

MDRS619FIE

SmartHome

Download the app
& activate product

Warning notices: Before using this product, please read this manual carefully and keep it for future reference.
The design and specifications are subject to change without prior notice for product improvement.
Consult with your dealer or manufacturer for details.
The diagram above is just for reference. Please take the appearance of the actual product as the standard.

LANGUAGES

EN	English
DE	Deutsch
IT	Italian
FR	French
ES	Spanish
PT	Portuguese
GR	Greek
PL	Polish
LV	Latvian
SR	Serbian
HR	Republika Hrvatska
HU	Hungary
SL	Slovenia
RO	Romania
BG	Bulgaria
LT	Lithuania
AL	Albanian
CZ	Czech
SK	Slovak

THANK YOU LETTER

Thank you for choosing Midea! Before using your new Midea product, please read this manual thoroughly to ensure that you know how to operate the features and functions that your new appliance offers in a safe way.

EN

CONTENTS

THANK YOU LETTER ---------- 01

SPECIFICATIONS ----------02

PRODUCT OVERVIEW ----------03

PRODUCT INSTALLATION----------04

OPERATION INSTRUCTIONS----------08

APP SETUP AND OPERATION ----------13

CLEANING AND MAINTENANCE----------15

TROUBLESHOOTING ---------- 16

APPENDIX---------- 20

SPECIFICATIONS

EN

Product model	MDRS619FIE
Rated Voltage/Frequency	220-240V~/50Hz
Rated Current	1.9A
Total Volume	460L
Fresh Food Storage Compartment Volume	271L
Frozen Food Storage Volume	189L
Temperature Rise Time	9h
Freezing Capacity	12kg/24h
Overall Dimension (W x D x H)	835x635x1775mm

Smart Home

Wireless Network module model	MWB-S-WB01
Standard	IEEE 802. 11b/g/n
Antenna Type	Printed PCB antenna
Frequency Band	2400-2483.5 MHz
Operating Temperature	0 ℃ ~ 85 ℃ /32 ℉ ~185 ℉ Operation humidity: 10%~85%
Power Input	DC5V/500mA Maximum Transmission power: <20dBm

PRODUCT OVERVIEW

EN

Names of components

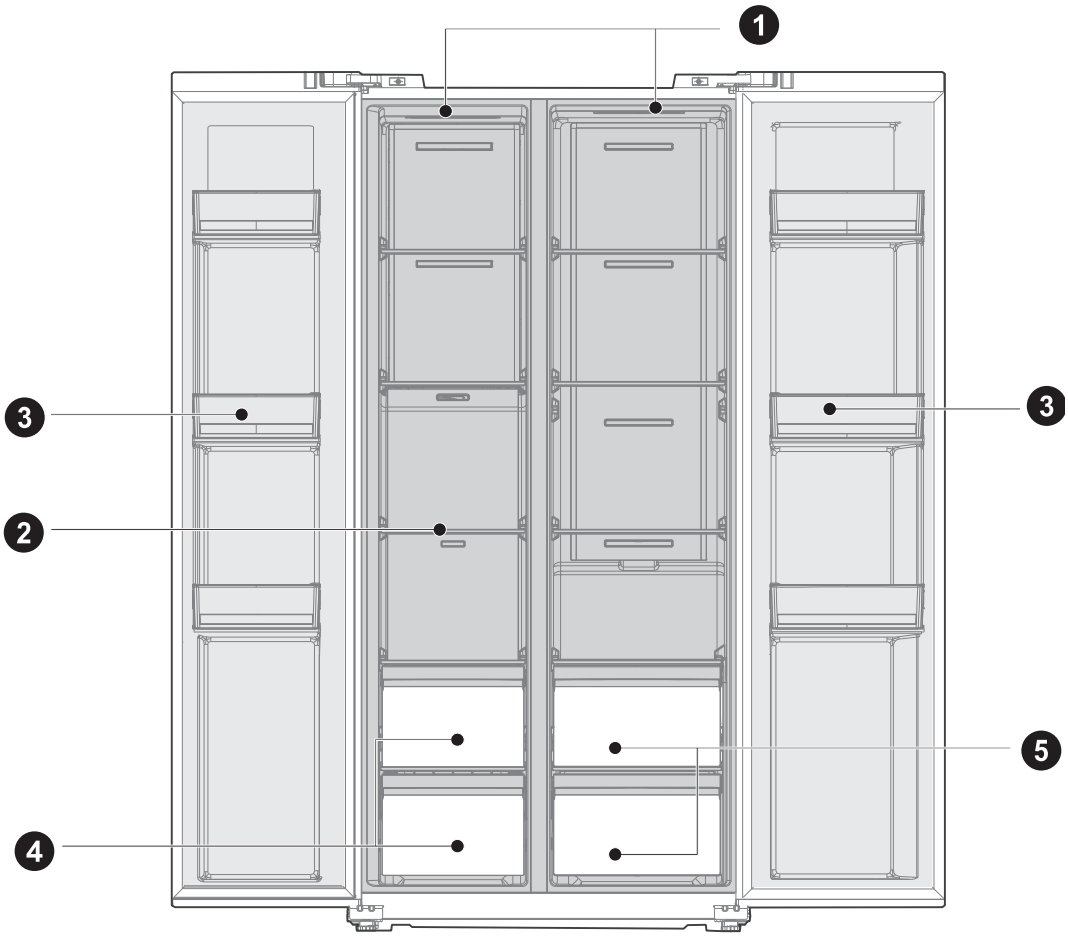

1	LED Lamp	**4**	Drawer
2	Glass Shelf	**5**	Fruits And Vegetables Box
3	Door Tray		

ATTENTION

The picture above is only for reference. The actual configuration will depend on the physical product or statement by the distributor

PRODUCT INSTALLATION

Install Instruction

EN

For refrigerating appliances with climate class

- Depending on the climate class, this refrigerating appliance is intended to be used at ambient temperatures range as specified following table.
- The climate class can be found on the rating plate. The product may not operate properly at temperatures outside of the specific range.
- You can find the climate class on the product label.

Effective temperature range

- The product is designed to operate normally in the temperature range specified by its class rating.

Class	Symbol	Ambient temperature range °C	
		IEC 62552 (ISO 15502)	ISO 8561
Extended temperate	SN	+ 10 to + 32	+ 10 to + 32
Temperate	N	+ 16 to + 32	+ 16 to + 32
Subtropical	ST	+ 16 to + 38	+ 18 to + 38
Tropical	T	+ 16 to + 43	+ 18 to + 43

Dimensions and Clearances

- Too small of a distance from adjacent items may result in the degradation of freezing capability and increased electricity costs. Allow over 100 mm of clearance from each adjacent wall when installing the appliance.

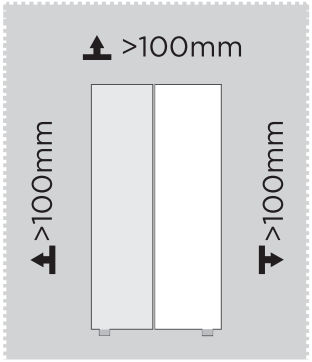

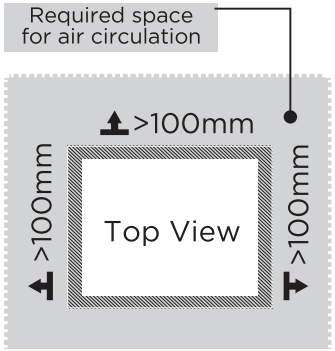

ATTENTION

The picture above is only for reference. The actual configuration will depend on the physical product or statement by the distributor

Space requirement diagram (when the door is open and when the door is closed)

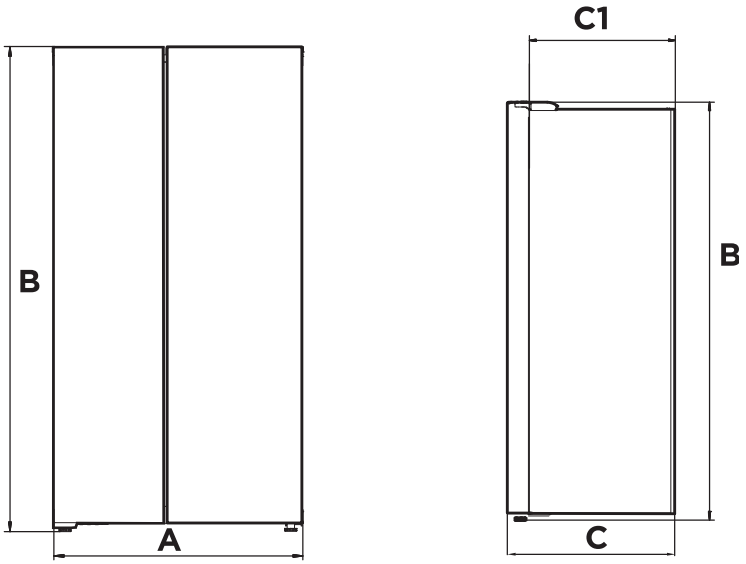

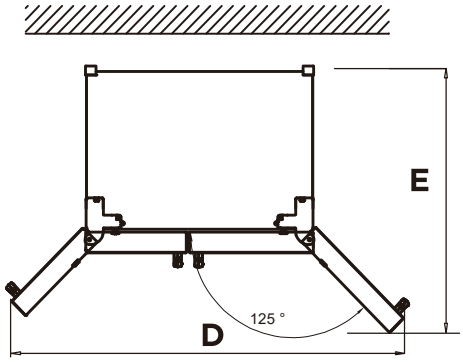

Width	Overall Height	Depth	Depth Without door	Width doors open 125°	Depth doors open 125°
A	B	C	C1	D	E
835	1775	635	540	1411	1105

Notice: All dimensions in mm

Leveling feet

To avoid vibration, the unit must be leveled.

If required, adjust the leveling screws to compensate for the uneven floor.

The front should be slightly higher than the rear to aid in door closing.

Leveling screws can be turned easily by tipping the cabinet slightly.

Turn the leveling screws counterclockwise to raise the unit, clockwise to lower it.

EN

Leveling doors

If the doors are not at the same height, the door can be adjusted with a spanner.

A- To raise the door, turn the nut (1) anticlockwise.

B- To lower the door, turn the nut (1) clockwise.

C- When the door is correctly aligned, fix it with the nut (2).

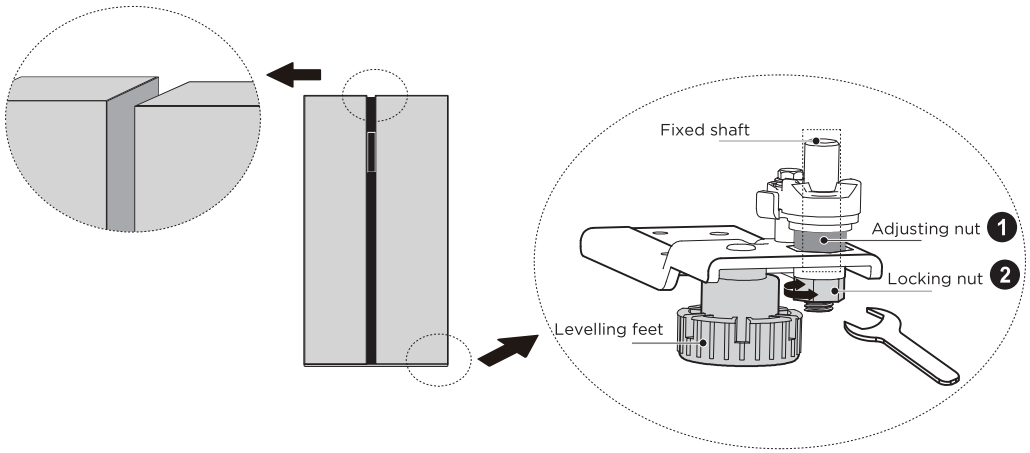

Moving the appliance

1. Remove all food from inside the appliance.
2. Pull the power plug out, insert and fix it into the power plug hook at the rear or on top of the appliance.
3. Tape parts such as shelves and the door handle to prevent from falling off while moving the appliance.
4. Move the appliance with more than two people carefully. When transporting the appliance over a long distance, keep the appliance upright.
5. After installing the appliance, connect the power plug into a socket out to switch on the appliance.

ATTENTION

Precautions before operation:
Before making changes the refrigerator must be disconnected from power.
precautions should be taken to prevent any personal injury.

Changing the light

- Any replacement or maintenance of the LED lamps is intended to be made by the manufacturer, its service agent or similar qualified person.

ATTENTION

This product contains two light sources of energy efficiency class (G).

Connecting the appliance

After installing the appliance, connect the power plug into a socket outlet.

ATTENTION

After connecting the power supply cord (or plug) to the outlet, wait 2 or 3 hours before you put food into the appliance. If you add food before the appliance has cooled completely, your food may spoil.

Tips for energy saving

- Do not place the appliance near cookers, radiators or other heat sources. If the ambient temperature is high, the compressor will run more frequently and for longer, resulting in increased energy consumption.
- Ensure that there is sufficient ventilation at the base of the appliance, on the sides of the appliance and at the back of the appliance. Never cover ventilation openings.
- Please also observe the spacing dimensions in the chapter “Installation”.
- The arrangement of drawers, shelves and racks as shown in the illustration offers the most efficient use of energy and should therefore be retained as far as possible. All drawers and shelves should remain in the appliance to keep the temperature stable and save energy.
- To obtain a larger storage space (e.g. for large refrigerated/frozen goods), the middle drawers can be removed. The top and bottom drawers and shelves should be removed last if necessary.
- An evenly filled refrigerator/freezer compartment contributes to optimal energy use. Therefore, avoid empty or half-empty compartments.
- Allow warm food to cool before placing it in the refrigerator/freezer. Food that has already cooled down increases energy efficiency.
- Allow frozen food to defrost in the refrigerator. The coldness of the frozen food reduces the energy consumption in the refrigerator compartment and thus increases the energy efficiency.
- Open the door only as briefly as necessary to minimise cold loss. Opening the door briefly and closing it properly reduces energy consumption.
- The door seals of your appliance must be perfectly intact so that the doors close properly and energy consumption is not increased unnecessarily.

OPERATION INSTRUCTIONS

EN

Control panel

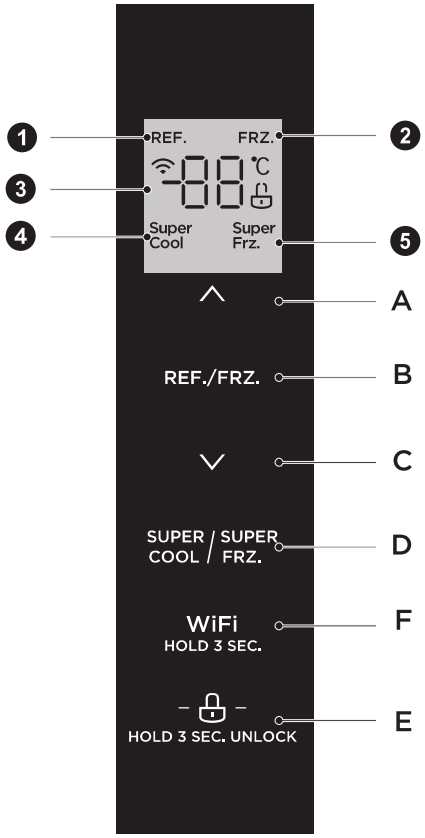

	Display		Button
1	Refrigerating icon	A	Temperature up button
2	Freezing icon	B	Temperature zone selection button
3	Temperature display icon	C	Temperature down button
4	Super cool icon	D	Super cool/freezing button
5	Super freezing icon	E	Lock/Unlock button
		F	Wireless button

ATTENTION

The actual control panel may differ from model to model.

Display

- When electrify the refrigerator, the display screen will totaldisplay for 3 seconds. Meanwhile the starting up bell rings and then the screen enters the normal display of the operation.
- The first time for using the refrigerator, the default settemperature of refrigerating chamber and freezing chamber is 5 ℃ / -18 ℃ respectively.
- When the error occurs, the display shows the error code (see next page); during normal running, the display shows the set temperature of the refrigerating chamber or freezing chamber.
- Under normal circumstances, if there is no operation on display panel or door opening action within 30s, then the display is lock, and the sate " " goes out.

EN

Lock / unlock

- In the unlocked state, long press the lock button " " for 3 seconds, enter the lock state, The logo " " lights up and buzzer sounds, it means the display panel is locked, at this time, button operation cannot be implemented;
- In the lockedstate, long press the lock button " " for 3 seconds, enter the unlocked state, The logo " " lights up and buzzer sounds, it means the display panel is unlocked, at this time, button operation can be implemented;

Temperature setting of refrigerating chamber

- Press temperature zone selection button " REF./FRZ " to choose the setting temperature zone of refrigerating chamber The " REF. " icon will light up, and then press "∧" or " ∨ " to adjust the setting temperature of refrigerating chamber.
- The temperature setting range for refrigerating chamber is 2℃ ~8℃ .

Temperature setting of freezing chamber

- Press temperature zone selection button " REF./FRZ " to choose the setting temperature zone of freezing chamber, The " FRZ. " icon will light up, and then press "∧" or " ∨ " to adjust the setting temperature of freezing chamber.
- The temperature setting range for freezing chamber is -24℃~-16℃.

Mode setting

- When super cool mode " Super Cool " is set, temperature of refrigerating chamber will automatically set at 2 °C,the longest running time of this mode is 6 h.
- Exit super cool mode " Super Cool " , temperature of refrigerating chamber will automatically returnback to temperature set before supercool mode.
- When superfreezing mode " Super Frz. " is set, temperature of freezing chamber will automatically set at -24 °C,exit after 24 hours of operation.
- Exit super freezing mode " Super Frz. " , temperature of freezing chamber will automaticallyreturn back to temperature setbefore super freezing mode.

ATTENTION

According to IEC62552 : 2007, the testing condition as follow: start the super freezer mode in advance, and wait when the fridge enters automatic defrosting, and then apply the freezer load.
The maximum defrosting time is 72 hours and the minimum is 12 hours at 32℃ .
Recommended setting: refrigerating chamber 4 ℃ , freezing chamber - 18 ℃ .

Storage upon power failure

- In case of power failure, the instant working state will be locked and maintained till re-electrification.

Error code

- The following warnings appearing on the display indicate corresponding faults of the refrigerator. Though the refrigerator may still have cold storage function with the following faults, the user shall contact a maintenance specialist for maintenance, so as to ensure optimized operation of the appliance.

EN

Error code	Error Description
E1	Temperature sensor failure of refrigerating chamber
E2	Temperature sensor failure of freezing chamber
E5	Freezing defrost sensor detection circuit error
E6	Communication error
E7	Circulation of temperature detection circuit error

Out of operation

- Power failure: In case of power failure, even if it is in summer, foods inside the appliance can be kept for several hours; during the power failure, the times of door opening shall be reduced, and no more fresh food shall be put into the appliance.
- Long-time nonuse: The appliance shall be unplugged and then cleaned; then the doors are left open to prevent odor.
- Moving: Before the refrigerator is moved, take all objects inside out, fix the glass partitions, vegetable holder, freezing chamber drawers and etc. with tape, and tighten the leveling feet; close the doors and fixthem with tape. During moving, the appliance shall not be laid upside down or horizontally, or be vibrated; the inclination during movement shall be no more than 45°.

ATTENTION

The appliance shall run continuously once it is started. Generally, the operation of the appliance shall not be interrupted; otherwise the service life may be impaired.

Tips on storing food

Freezer compartment

- The freezer is designated for the storage of food frozen at very low temperature, long-term storage of frozen food, and for the production of ice.
- Only use the shelves in the door of the freezer to store frozen food, not for storing hot food designated for freezing.
- Do not put fresh and frozen food next to each other. The frozen food may thaw.
- When freezing fresh food (such as meat, fish or chopped meat), cut them into parts that can be used at the same time.
- Storing frozen food: instructions are usually stated on the packages, which must be followed. If there is no information on the packaging, food should not be stored for longer than three months from the date of purchase.
- When purchasing frozen food, make sure that it was frozen at a suitable temperature and that the packaging is not damaged.
- Frozen food should be kept in suitable packages to retain the quality and should be returned to the freezer compartment as soon as possible.
- If a package of frozen food shows moisture or abnormal bulging, it is probable that it was stored at the wrong temperature and the content is spoiled.
- The storage period for frozen food depends on the room temperature, the thermostat setting, the frequency of opening the door of the freezer, the type of food and the time of transporting the product from the shop to the household. Always follow the instructions printed on the packaging and never exceed the maximum storage time stated on the package.

Cooling compartment

- To reduce moisture and subsequent ice build-up, never put liquid into the refrigerator in unsealed containers. Frost tends to concentrate in the coolest parts of the evaporator. Storing uncovered liquids results in a more frequent need for defrosting.
- Never put warm foods in the refrigerator. These should first cool down at room temperature and then be placed so as to ensure adequate air circulation in the refrigerator.
- Foods or food containers should not touch the back wall of the refrigerator because they could freeze to the wall. Do not keep regularly opening the door of the refrigerator.
- Meat and clean fish (packed in a package or plastic foil) can be placed in the refrigerator, which can be used in 1–2 days.
- Fruit and vegetables without packaging can be placed in the part designated for fresh fruit and vegetables.

Recommended Temperature

The optimal temperature setting for food storage:

- Fridge: 4 °C , Freezer: -18 °C

ATTENTION

The optimal temperature setting of each compartment depends on the ambient temperature. Above optimal temperature is based on the ambient temperature of 25 °C.

EN

EN

Order	Compartments TYPE	Target storage temp. [°C]	Appropriate food
1	Fridge	+2 ~ +8	Eggs, cooked food, packaged food, fruits and vegetables, dairy products, cakes, drinks and other foods are not suitable for freezing.
2	(***)*-Freezer	≤-18	Seafood (fish, shrimp, shellfish), freshwater aquatic products and meat products (recommended for 3 months, the longer the storage time, the worse the taste and nutrition), suitable for frozen fresh food.
3	***-Freezer	≤-18	Seafood (fish, shrimp, shellfish), freshwater aquatic products and meat products (recommended for 3 months, the longer the storage time, the worse the taste and nutrition), suitable for frozen fresh food.
4	**-Freezer	≤-12	Seafood (fish, shrimp, shellfish), freshwater aquatic products and meat products (recommended for 3 months, the longer the storage time, the worse the taste and nutrition), suitable for frozen fresh food.
5	*-Freezer	≤-6	Seafood (fish, shrimp, shellfish), freshwater aquatic products and meat products (recommended for 3 months, the longer the storage time, the worse the taste and nutrition), suitable for frozen fresh food.
6	0-star	-6 ~ 0	Fresh pork, beef, fish, chicken, some packaged processed foods, etc. (Recommended to eat within the same day, preferably no more than 3 days). Partially encapsulated processed foods (non-freezable foods).
7	Chill	-2 ~ +3	Fresh/ frozen pork, beef, chicken, freshwater aquatic products, etc. (7 days below 0°C and above 0°C is recommended for consumption within that day, preferably no more than 2 days).Seafood (less than 0 for 15 days, it is not recommended to store above 0°C.
8	Fresh food	0 ~ +4	Fresh pork, beef, fish, chicken, cooked food, etc.(Recommended to eat within the same day, preferably no more than 3 days)
9	Wine	+5 ~+20	Red wine, white wine, sparkling wine, etc.

ATTENTION

please store different foods according to the compartments or target storage temperature of your purchased

APP SETUP AND OPERATION

EN

Download the SmartHome App

On an app market (Google Play Store, Apple App Store), search for “SmartHome” and find the SmartHome app. Download and install it on your phone. You can also download the app by scanning the QR code below.



Register and log in

Open the SmartHome app, and create a new account to start (you can also register through a third-party account). If you already have an existing account, use the account to log in.



Connect your devices to SmartHome

1. Please make sure your mobile phone is connected to a wireless network. If it is not, go to Settings and enable wireless networks and Bluetooth.
2. Please power on your devices.
3. Open SmartHome App on your phone.
4. If a message of "Smart devices discovered nearby" appears, click to add.

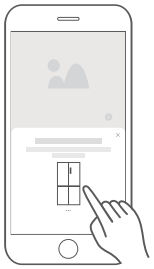

5. If no message appears, select “+” on the page and select your device in the list of nearby devices available. If your device is not listed, please add your device manually by the device category and device model.

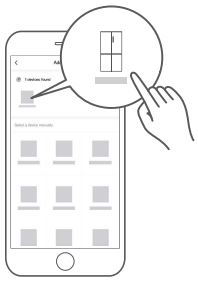

6. Connect your device to the wireless network according to instructions on app. If the connection fails, please follow the instructions provided by the app to continue with the operation.



NOTE

1. Make sure your devices are powered on.
2. Keep your mobile phone close enough to your device when you are connecting your device to the network.
3. Connect your mobile phone to the wireless network at home, and make sure you know the password of the wireless network.
4. Check if your wireless router supports 2.4 GHz band and turn it on. If you are not sure whether the router supports 2.4 GHz band, please contact the router manufacturer.
5. The device cannot connect to the wireless network that requires authentication, and it usually appears in public areas such as hotels, restaurants, etc. Please connect to a wireless network that does not require authentication.
6. Turn off the WLAN+ (Android) or WLAN Assistant (iOS) function of your mobile phone when connecting your device to the network.
7. In the case that your device connected to a wireless network before but it needs to reconnect, please click “+” on the app Home page, and add your device again by the device category and model according to the instructions on app.

CLEANING AND MAINTENANCE

EN

Defrosting

- The refrigerator is made based on the air-cooling principle and thus has automatic defrosting function. Frost formed due to change of season or temperature may also be manually removed by disconnection of the appliance from power supply or by wiping with a dry towel.

Cleaning of door tray

- According to the direction arrow in the figure below, use both hands to squeeze the tray, and push it upward, then you can take it out.
- After washing the tray having been taken out, you can adjust its installing height in accordance with your requirement.

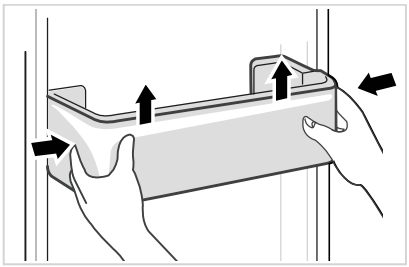

Cleaning of glass shelf

- As the innermost part of the refrigerator liner where contacting the shelves has a backstop, you shall raise the shelves upward, then you can be able to take it out.
- Adjust or clean the shelves according to your requirement.

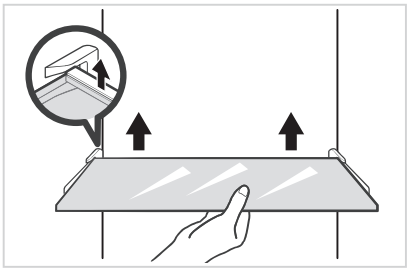

Cleaning the vegetable drawer

1. Remove the contents of the drawer. Hold the handle of the vegetable drawer and pull it out completely until it stops.

2. Lift the vegetable drawer up and remove it by pulling it out.

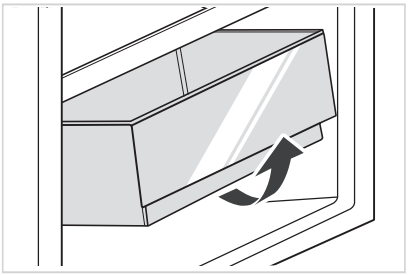

ATTENTION

Soft towels or sponge dipped in water and non-corrosive neutral detergents are suggested for cleaning. The freezer of shall be finally cleaned with clean water and dry cloth. Open the door for natural drying before the power is turned on. Do not use hard brushes, clean steel balls, wire brushes, abrasives, such as toothpastes, organic solvents (such as alcohol, acetone, banana oil, etc.), boiling water, acid or alkaline items clean refrigerator considering that this may damage the fridge surface and interior.

EN

TROUBLESHOOTING

The following simple issues can be handled by the user. Please call the after-sale service department if the issues are not solved.

Problem	Possible reason
Failed operation	• Check whether the appliance is connected to power or whether the plug is in well contact
	• Check whether the voltage is too low
	• Check whether there is a power failure or partial circuits have tripped
Odor	• Odorous foods shall be tightly wrapped
	• Check whether there is any rotten food
	• Clean the inside of the refrigerator
Long-time operation of the compressor	• Long operation of the refrigerator is normal in summer
	• when the ambient temperature is high It is not suggestible having too much food in the appliance at the same time
	• Food shall get cool before being put into the appliance
	• The doors are opened too frequently
Light fails to get lit	• Check whether the refrigerator is connected to power supply and whether the illuminating light is damaged
	• Have the light replaced by a specialist
Door can not be properly closed	• The door is stuck by food packages too much food is placed
	• The refrigerator is tiltedr.
Loud noises	• Check whether the floor is level and whether the refrigerator is placed stably
	• Check whether accessories are placed at proper locations

Problem	Possible reason
Door seal fails to be tight	• Remove foreign matters on the door seal
	• Heat the door seal and then cool it for restoration (or blow it with an electrical drier or use a hot towel for heating)
Water pan overflows	• There is too much food in the chamber or food stored contains too much water,resulting in heavy defrosting
	• The doors are not closed properly, resulting in frosting due to entry of air and increased water due to defrosting
Hot housing	• Heat dissipation of the built-in condenser via the housing, which is normal. When housing becomes hot due to high ambient temperature, storage of too much food or shutdown of the compressor is shut down, provide sound ventilation to facilitate heat dissipation
Surface condensation	• Condensation on the exterior surface and door seals of the refrigerator is normal when the ambient humidity is too high. Just wipe the condensate with a clean towel.

DOC AND CERTIFICATIONS

Declaration of Conformity

EN

We hereby confirm that the following customer model names and Midea model names match each other respectively.

Brand	Midea Model	Marketing Model	Factory Model
Midea	HC-598WEN	MDRS619FIE46	CE-BCD460WZ-JQ
Midea	HC-598WEN	MDRS619FIE28	CE-BCD460WZ-JQ

Application of Council Directives	LVD: 2009/125/EC
Standards, to which Conformity Is Declared	EMC: 2004/108/EC

EN 300 328 V 2.2.2:2019
EN 301 489-1 V 2.2.3:2019
EN 301489-17 V 3.2.4:2020
EN IEC 55014-1:2021
EN IEC 55014-2:2021
EN IEC 61000-3-2:2019+A1
EN IEC 61000-3-3:2013+A1+A2
EN 60335-1:2012+A11:2014+A13:2017+A1:2019+A14:2019+A2:2019+A15:2021
EN 60335-2-24:2010+A1:2019+A2:2019+A11:2020
EN 62233:2008
EN IEC 62311:2020
EN 50665:2017
EN 62479:2010
EN 50663:2017

Manufacturer's Name:	Hubei Midea Refrigerator Co., Ltd.
Manufacturer's Address:	No.38 Oriental Road, 434000, Jingzhou, Hubei, P.R. China

We, Hubei Midea Refrigerator Co., Ltd.
hereby declare that the above-mentioned products comply with the above-mentioned currently valid regulations and standards.

SIGNATURE: 

Date: 2023-01-16

CE

Midea hereby declares that the appliance with SmartHome functionality meets the essential requirements and other relevant provisions of the Directive 2014/53/EU. A detailed RED Declaration of Conformity can be found online at www.midea.com among the additional documents on the product page for your appliance.

CE

2.4 GHz band:100mW max.
5 GHz band: 100mW max.

EN

APPENDIX

EN

Special for new European standard

The ordered parts in the following table can be acquired from Service provider channel

Ordered part	Provided by	Minimum time required for Provision
Thermostats	Professional maintenance personnel	At least 7 years after the last model is launched on the market
Temperature sensors	Professional maintenance personnel	At least 7 years after the last model is launched on the market
Printed circuit boards	Professional maintenance personnel	At least 7 years after the last model is launched on the market
Light sources	Professional maintenance personnel	At least 7 years after the last model is launched on the market
Door handles	Professional repairers and final users	At least 7 years after the last model is launched on the market
Door hinges	Professional repairers and final users	At least 7 years after the last model is launched on the market
Trays	Professional repairers and final users	At least 7 years after the last model is launched on the market
Baskets	Professional repairers and final users	At least 7 years after the last model is launched on the market
Door gaskets	Professional repairers and final users	At least 10 years after the last model is launched on the market

Dear customer

1. If you want to return or replace the product, please contact the store where you buy.

(Remember to bring the purchase invoice)

2. If your product breaks down which needs to repair, please contact after-sales service provider.

ATTENTION

The model information inthe product database, as well as the model identifier, can be obtained througha weblink scanned by a QR code, if any, on the energy efficiency label of the product.
For more information about the energy efficiency of the appliance, visit https://ec.europa.eu and search using the model name.
The model name can be found on the rating label of the appliance.

Coldest zone in the refrigerator

OPTIONAL: OK-temperature indicator

- The OK-temperature indicator can be used to determine temperatures below +4°C. Gradually reduce the temperature if the sign does not indicate “OK”.

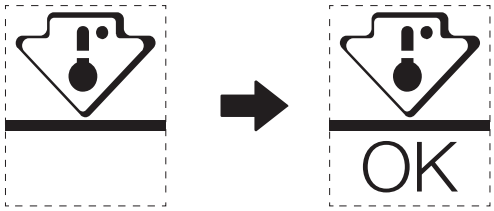

EN

- To ensure the temperature in this area, do not change the positioning of the shelf. Inforced air refrigerators (equipped with a fan or No Frost models),the symbol of the coldest zone is not represented because the temperature inside is homogeneous.

Temperature indicator setting

- To help you set your refrigerator well, it is equipped with a temperature indicator that will monitor the average temperature in the coldest zone.
- WARNING:This indicator is intended to work only with your refrigerator, do not use it in another refrigerator (in fact, the coldest zone is not the same), or for any other use.

Checking the temperature in the coldest zone

- With the temperature indicator, you can check regularly that the temperature of the coldest zone is correct. Indeed, the internal temperature of the refrigerator depends on several factors such as the ambient temperature of the room, the amount of food stored and the frequency of door opening. Take these factors into consideration when setting the device.
- When the indicator shows « OK », this means that your thermostat is well adjusted and the internal temperature correct.
- If the indicator of temperature turns WHITE, this means that the temperature is too high; in this case, increase the refrigerator temperature control setting and wait for 12 hours before performing a new visual inspection of the indicator. When fresh food has been introduced or the door has been left open, it is possible for the indicator of temperature to turn WHITE after a while.

Midea

make yourself at home

www.midea.com

© Midea 2022 all rights reserved