INSTRUCTION MANUAL

Velieta

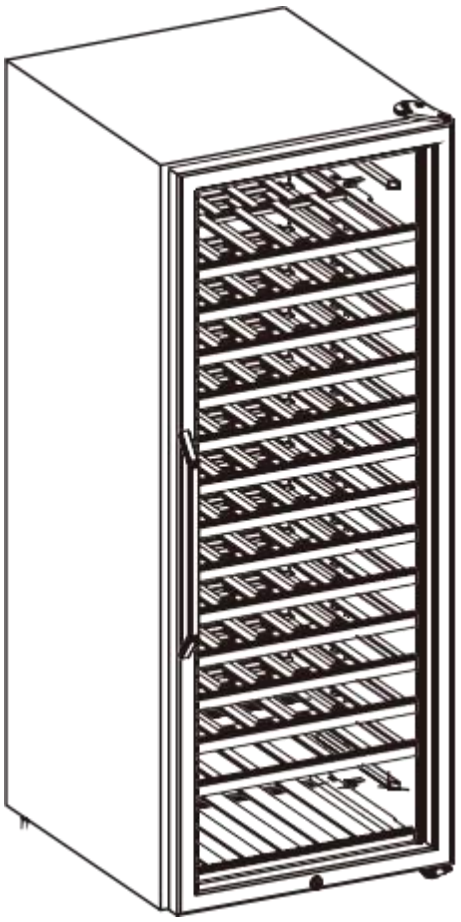

MODE L: KMHJ408

24 Inch Wine Cooler Refrigerator

TABLE OF CONTENTS

WINE CHILLER SAFETY	3
IMPORTANT SAFE-GUIDES	4-5
PARTS BREAKDOWN	6
IMPORTANT SAFETY INSTRUCTIONS	6
INSTALLATION INSTRUCTIONS	7
Before using your wine chiller	7
Installation of your wine chiller	7
Electrical connection	7
Extension cord	8
Power bar with surge protector	8
Installing stainless steel handle	8
OPERATING YOUR WINE chiller	9
Recommended temperature settings	9
Storage	10
Door lock	10
Cleaning your wine chiller	10
Shelves	11
Power failure	11
Moving your wine chiller	11
Energy saving tips	12
Charcoal filtration system	12
TROUBLESHOOTING GUIDE	13- 14

WINE CHILLER SAFETY

Your safety and the safety of others are very important.

We have provided many important safety messages in this manual and on your appliance. Always read and obey all safety messages.



This is the Safety Alert Symbol. This symbol alerts you to potential hazards that can kill or injure you and others. All safety messages will follow the Safety Alert Symbol and either the words “DANGER”, “WARNING” or “CAUTION”.

DANGER

Danger means that failure to heed this safety statement may result in severe personal injury or death.

WARNING

Warning means that failure to heed this safety statement may result in extensive product damage, serious personal injury, or death.

CAUTION

Caution means that failure to heed this safety statement may result in minor or moderate personal injury, or property or equipment damage.

All safety messages will alert you do what the potential hazard is, tell you how to reduce the chance of injury, and let you know what can happen if the instructions are not followed.

IMPORTANT SAFEGUIDES



Before the appliance is used, it must be properly positioned and installed as described in this manual, so read the manual carefully. To reduce the risk of fire, electrical shock or injury when using the appliance, follow basic precaution, including the following:

⚠ DANGER ⚠

- Plug into a grounded 3-prong outlet, do not remove grounding prong, do not use an adapter, and do not use an extension cord.
- Replace all panels before operating.
- It is recommended that a separate circuit, serving only your appliance be provided. Use receptacles that cannot be turned off by a switch or pull chain.
- Never clean appliance parts with flammable fluids. These fumes can create a fire hazard or explosion. And do not store or use gasoline or other flammable vapour and liquids in the vicinity of this or any other appliance. The fumes can create a fire hazard or explosion.
- Before proceeding with cleaning and maintenance operations, make sure the power line of the unit is disconnected.
- Do not connect or disconnect the electric plug when your hands are wet.
- Unplug the appliance or disconnect power before cleaning or servicing. Failure to do so can result in electrical shock or death.
- Do not attempt to repair or replace any part of your appliance unless it is specifically recommended in this material. All other servicing should be referred to a qualified technician.



The symbol is a warning symbol for risk of fire/flammable material. WARNING: When positioning the appliance, ensure the supply cord is not trapped or damaged.

WARNING: Do not locate multiple portable socket-outlets or portable power supplies at the rear of the appliance.

⚠ WARNING ⚠

- Use two or more people to move and install appliance. Failure to do so can result in back or other injury.
- To ensure proper ventilation for your appliance, the front of the unit must be completely unobstructed. Choose a well-ventilated area with temperatures above 16°C (60°F) and below 32°C (90°F). This unit must be installed in an area protected from the element, such as wind, rain, water spray or drips.
- The appliance should not be located next to ovens, grills or other sources of high heat.
- The appliance must be installed with all electrical, water and drain connections in accordance with state and local codes. A standard electrical supply (115V/60Hz), properly grounded in accordance with the National Electrical Code and local codes and ordinances is required.
- Do not kink or pinch the power supply cord of appliance.
- The fuse (or circuit breaker) size should be 13 amperes.
- It is important for the appliance to be leveled in order to work properly. You may need to make several adjustments to level it.
- Never allow children to operate, play with or crawl inside the appliance.
- Do not use solvent-based cleaning agents of abrasives on the interior. These cleaners may damage or discolour the interior.
- Do not use this apparatus for other than its intended purpose.

⚠ FLAMMABLE REFRIGERANT GAS ⚠

DANGER - Risk of fire or explosion. Flammable refrigerant used.

DO NOT use mechanical devices to defrost refrigerator. DO NOT puncture refrigerant tubing.

DANGER - Risk of fire or explosion. Flammable refrigerant used. To be repaired only by trained service personnel. DO NOT puncture refrigerant tubing.

CAUTION - Risk of fire or explosion. Flammable refrigerant used. Consult repair manual / owner's guide before attempting to service this product. All safety precautions must be followed.

CAUTION - Risk of fire or explosion. Dispose of property in accordance with federal or local regulations. Flammable refrigerant used.

CAUTION - Risk of fire or explosion due to puncture of refrigerant tubing. Follow handling instructions carefully. Flammable refrigerant used.

CAUTION - To prevent a child from being entrapped, keep out of reach of children and not in the vicinity of the cooler.

PARTS BREAKDOWN

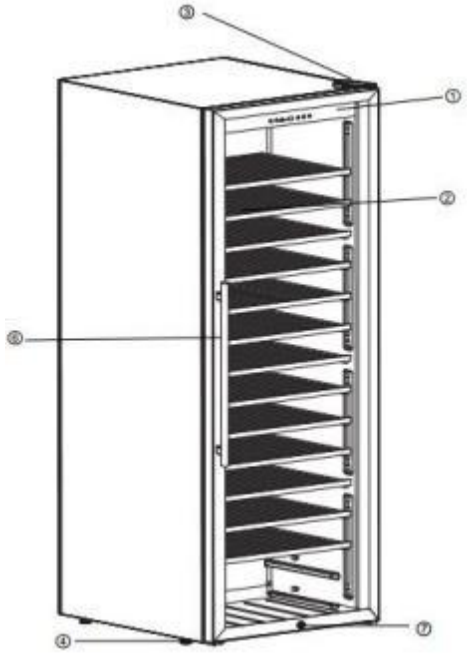

1	Control Panel	5	Top Hinge
2	Wooden Shelves	6	Glass Door with Handle
3	Kick plate	7	Safety Child Lock
4	Leveling Legs		

IMPORTANT SAFETY INSTRUCTIONS

WARNING	To reduce the risk of fire, electrical shock, or injury when using your appliance, follow these basic precautions:

- Read all instructions before using the wine chiller.
- **DANGER or WARNING:** Risk of child entrapment.
  Child entrapment and suffocation are not problems of the past. Junked or abandoned appliances are still dangerous.
- Before you throw away your old wine chiller, take off the door but leave the shelves in place so that children may not easily climb inside.
- Never allow children to operate, play with, or crawl inside the appliance.
- Never clean appliance parts with flammable fluids. The fumes can create a fire hazard or explosion.
- Do not store or use gasoline or any other flammable vapors and liquids in the vicinity of this or any other appliance. The fumes can create a fire hazard or explosion.

-Save these instructions-

INSTALLATION INSTRUCTIONS

Before using your wine chiller

- Remove the exterior and interior packing.
- Check to be sure you have all of the following parts:
  - shelves
  - 2 Keys
  - Stainless Steel Handle
  - Instruction Manual
- Before connecting the Wine Chiller to the power source, let it stand upright for approximately 2 hours. This will reduce the possibility of a malfunction in the cooling system from handling during transportation.
- Clean the interior surface with lukewarm water using a soft cloth.
- Install the handle on the left side of the door.

Installation of your wine chiller

- This appliance is designed to be for free standing installation or flush-in.
- Place your wine chiller on a floor that is strong enough to support it when it is fully loaded. To level your wine chiller, adjust the front leveling legs at the bottom of the wine chiller.
- Locate the wine chiller away from direct sunlight and sources of heat (stove, heater, radiator, etc.). Direct sunlight may affect the acrylic coating and heat sources may increase electrical consumption. Extreme cold ambient temperatures may also cause the unit not to perform properly.
- Avoid locating the unit in moist areas.
- Plug the Wine Chiller into an exclusive, properly installed-grounded wall outlet. Do not under any circumstances cut or remove the third (ground) prong from the power cord. Any questions concerning power and/or grounding should be directed toward a certified electrician or an authorized Products service center.

Electrical connection

Warning: Improper use of the grounded plug can result in the risk of electrical shock. If the power cord is damaged, have it replaced by an authorized service center.

This appliance should be properly grounded for your safety. The power cord of this appliance is equipped with a three-prong plug which mates with standard three prong wall outlets to minimize the possibility of electrical shock.

Do not under any circumstances cut or remove the third ground prong from the power cord supplied. For personal safety, this appliance must be properly grounded.

This appliance requires a standard 115V/60Hz electrical ground outlet with three-prong. Have the wall outlet and circuit checked by a qualified electrician to make sure the outlet is properly grounded. When a standard 2-prong wall outlet is encountered, it is your responsibility and obligation to have it replaced with a properly grounded

3-prong wall outlet. The cord should be secured behind the appliance and not left exposed or dangling to prevent accidental injury.

The appliance should always be plugged into its own individual electrical outlet which has a voltage rating that matches the rating label on the appliance. This provides the best performance and also prevent overloading house wiring circuits that could cause a fire hazard from overheated. Never unplug the appliance by pulling the power cord. Always grip the plug firmly and pull straight out from the receptacle. Repair or replace immediately all power cords that have become frayed or otherwise damaged. Do not use a cord that shows cracks or abrasion damage along its length or at either end. When moving the appliance, be careful not to damage the power cord.

Extension cord

Because of potential safety hazards under certain conditions, it is strongly recommended that you do not use an extension cord with this appliance. However, if you must use an extension cord with this appliance, it must be operated by professionals.

Power bar with surge protection

Most electrical appliances use a series of electric control boards to operate. These boards are very susceptible to power surges and could be damaged or destroyed.

If the appliance is going to be used in an area or if your city / country is prone to power surges / outages; it is suggested that you use a power surge protector for all electrical devices / appliances you use. The surge protector that you select must have a surge block high enough to protect the appliance it is connected to. If you have any questions regarding the type and size of surge protector needed contact a licensed electrician in your area.

Damages due to power surges are not considered a manufacturer covered defect and will void your product warranty.

Installing the stainless steel handle

This wine chiller includes a stainless steel handle. To install the handle please follow the below instructions:

1. Pull away the door gasket in the area where the handle is to be installed on the left side as shown below in **Illustration # 1**. The gasket is easily displaced by hand, no tools are necessary.
2. Align the handle with the screws installed. Tighten the screws using a Phillips head screwdriver until the handle sets both flush and secured tightly against the door frame. (DO NOT over tighten as this will cause damage to the handle assembly).

3. Replace the door gasket to its original position.

4. If you choose not to use the handle supplied, simply follow step 1 to access the installation screws and remove them and then place the two decorative plugs into the two holes separately. Continue on to step 3 to replace the door gasket to its original position.

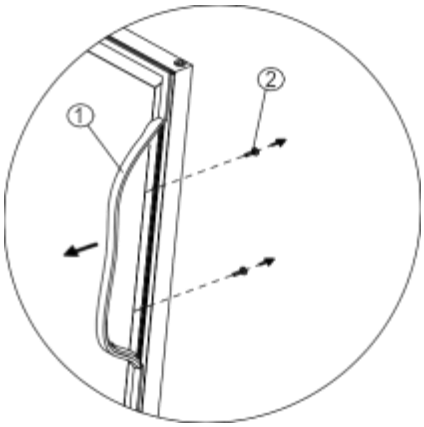

Illustration # 1

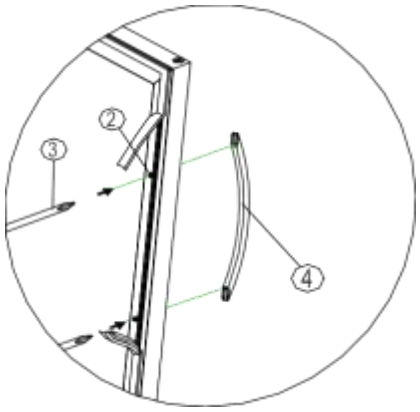

Illustration # 2

1. Gasket
2. Phillips Head Screw
3. Phillips Head Screw Driver
4. Handle

OPERATING YOUR WINE CHILLER

It is recommended you install the wine chiller in a place where the ambient temperature is between 19ºC-24ºC (66ºF-75ºF), and humidity is under 60%. If the ambient temperature is above or below recommended temperatures, the performance of the unit may be affected. For example, placing your unit in extreme cold or hot conditions may cause interior temperatures to fluctuate.

Recommended temperature settings

Wine conservation: 12°C-14ºC (53°F-57ºF)
Rose and sparkling wines: 5°C-8ºC (41°F-46ºF)
Dry/white wines: 9°C-12ºC (48°F-53ºF)
Red wines: 14°C-18ºC (59°F-65ºF)
*Temperature ºC may varies between < + 2 ºC



Temperature setting range：5-18℃(40-65℉)

	Turns the interior light on or off
	Toggles the temperature display between Celsius and Fahrenheit
	Press to begin adjusting the temperature for upper or lower zone
	Adjusts the temperature in 1 degree increments
	Adjusts the temperature in 1 degree decrements
	Press for 3 seconds to turn on /off the appliance

Light Control

The light will automaticall turns off 10 mins later for energy saving.
Note: To keep the light staying on always, please press the lighting mark unil you hear 2 "beep"

Storage

Many bottles may differ in size and dimensions. As such the actual number of bottles you may be able to store may vary. The bottle capacity is based on standard Bordeaux bottles.

Door Lock

Your unit is provided with a lock and key. The keys are located inside the plastic bag that contains the Instruction Manual. Insert the key into the lock and turn it counter clockwise to unlock the door. To lock the door do the reverse operation making sure metal pin is engaged completely. Remove the key and place it in a secure place for safekeeping.

Cleaning your wine chiller

Turn off the power, unplug the appliance, and remove all items including shelves. Wash the inside surfaces with a warm water and baking soda solution. The solution should be about 2 tablespoons of baking soda to 1 cup of water.

Wash the shelves with a mild detergent solution. Wring excess water out of the sponge or cloth when cleaning area of the controls, or any electrical parts.

Wash the outside cabinet with warm water and mild liquid detergent. Rinse well and wipe dry with a clean soft cloth. Do not use steel wool or steel brush on the stainless steel. These will contaminate the stainless steel with steel particles and rusting may occur.

Romving Shelf

●To avoid the damage of door sealing, please open the door fully when you slide out the shelves.

● For your convenience of taking wine, you can pull out the shelf by 1/3. Our product is designed with shelf holder to prevent the shelf pull over and fall off the cabinet.

● If you need to take off the shelf from cabinet, you can pull out the shelf to the position where the notch of shelf is exactly under the plastic post and then lift it up and out. (See figure below)

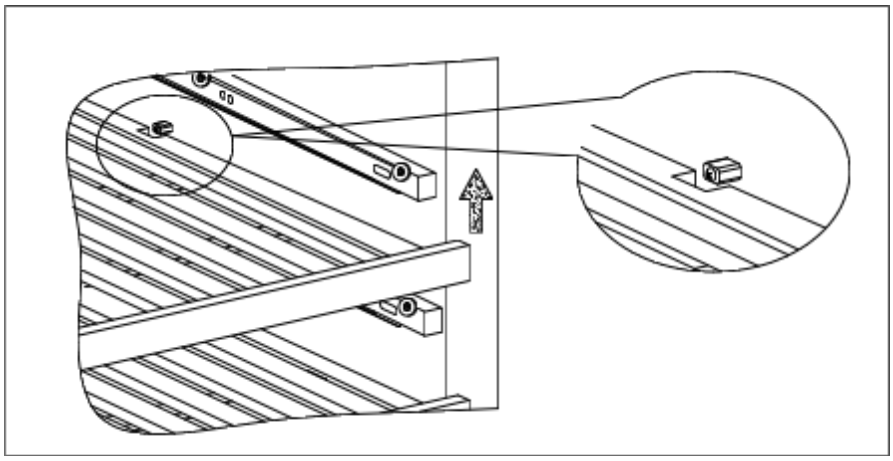

Power failure

Most power failures are corrected within a few hours and should not affect the temperature of your appliance if you minimize the number of times the door is opened. If the power is going to be off for a longer period of time, you need to take the proper steps to protect your contents.

Moving your wine chiller

- Remove all items (bottles)
- Tape down securely all loose items (shelves) inside your appliance.
- Turn the adjustable leg up to the base to avoid damage.
- Tape the door shut.

- Be sure the appliance stays secure in the upright position during transportation. If you absolutely need to transport the chiller horizontally, transport the chiller on its back (door on top). Also protect outside of appliance with a blanket, or similar item.

Energy saving tips

The wine chiller should be located in the coolest area of the room, away from heat producing appliances, and out of the direct sunlight.

Charcoal filtration system

Your wine is a living object that breathes through the cork ofits bottle. In order to preserve the quality and taste of your fine wines, they must be stored at the ideal temperature and ambient conditions. Your cellar is equipped with an active charcoal filtration system to ensure air purity, cooling efficiency, and to maintain an odor free cabinet for the storage of your fine wines. The filter assembly is located at the rear panel inside your cellar. Keep in mind, that this filter must be changed every 12 months.

1	Remove the bottles of wine stored on the two (2) shelves in front of the filter.	
2	Remove the shelves and set aside to be replaced once you have changed the filter	
3	Hold the filter and turn it at 45 degrees in the counter-clockwise direction and then pull it out.	
4	Remove the existing filter and replace with a new one.	
5	Put the new filter into the hole and then turn the filter at 45 degrees in clockwise direction.	Turn Left to remove filter.

TROUBLESHOOTING GUIDE

You can solve many common wine chiller problems easily, saving you the cost of a possible service call. Try the suggestions below to see if you can solve the problem before calling the servicer.

PROBLEM	POSSIBLE CAUSE	SOLUTION
chiller does not operate.	Not plugged in. The appliance is turned off. The circuit breaker tripped or a blown fuse.	Plug the unit. Press to turn on the unit. Check the breaker and/or fuses.
chiller is not cold enough.	External environment may require a higher setting. The door is opened too often. The door is not closed completely. The door gasket does not seal properly.	Check the temperature control setting. Close the door properly. Check the door gasket.
The compressor turns on and off frequently.	The room temperature is hotter than normal. A large amount of contents has been added to the chiller. The door is opened too often. The door is not closed completely. The temperature control is not set correctly. The door gasket does not seal properly.	Close the door properly. Check the door gasket.
The fans turn on and off frequently.	In order to circulate the air and maintain the set temperature inside the cabinet the fans must cycle on and off even when the compressor is off. The fans will cycle ON and OFF while the compressor is off approximately every 10 seconds, this is called “Semi-speed status”. This cycle is normal and meant both to circulate the air as well as ensure the continued operational status of the fans. If the fan stops completely and does not complete this cycle the fan is non-operational.	
The light does not work.	Not plugged in. The circuit breaker tripped or a blown fuse. The light button is “OFF”.	Plug the unit. Check the breaker and/or fuses.

Vibrations.	The chiller is not leveled The bottles are vibrating. There is an object under the chiller.	Check to assure that the chiller is level. Make sure the bottles don't touch each others. Remove the object.
The chiller seems to make too much noise.	The chiller is not level.	Level the chiller. The rattling noise may come from the flow of the refrigerant, which is normal. As each cycle ends, you may hear gurgling sounds caused by the flow of refrigerant in your chiller. Contraction and expansion of the inside walls may cause popping and crackling noises.
The door will not close properly.	The chiller is not level. The door was reversed and not properly installed. The gasket is dirty. The shelves are out of position.	Level the chiller. Close the door properly. Clean the door gasket. Place the shelves properly.
Error Code: E1-E2-E3- E4-E7-E8	A sensor has failed.	Contact us for a service call.

Warranty Terms

Warranty Period

1. Customers are entitled to replacement or free repair service in case of quality defect(s) found in the product with in 15 days upon receipt of the product.
2. Customers are entitled to free repair service from Velieta for any product proven defective in material or workmanship that results in product failure during normal consumer usage and conditions within the valid warranty period, which is 12 months counting from the date of selling. However, warranty period varies by product component and country of purchase. Please contact our after-sales service team via velieta@outlook. com for detailed warranty information.

Warranty Exclusions

1. Products subjected to unauthorized repair, misuse, collision, neglect, mishandling, soaking, accident, and unauthorized alteration.
2. Products subjected to improper use or whose labels or security tags have been torn off or altered.
3. Products whose warranty has expired.
4. Products damaged due to force majeure, such as fire, flood, lightening, etc.

Warranty Claim Procedure

1. If failure or any problem occurs to your product after purchase, please contact us on Amazon, or you can always contact Velieta's customer service through email at velieta@outlook.com.
2. Velieta's customer service will guide you through the whole service procedure regarding any product issue or problem you have encountered.

Velieta reserves the right to reexamine damaged or returned products.

Contact Card

Phone: 1-213-352-5535

E-mail: velieta@outlook.com