Hisense

life reimagined

USER'S OPERATION MANUAL

Before operating this unit, please read this manual thoroughly, and retain for future reference.

HRBM503S

English

Contents

Thank you for choosing Hisense. We are sure you will find your new refrigerator a pleasure to use. However, before you use the appliance, we recommend that you carefully read the instructions, which provide details about installing and using the product. Please keep this manual for future reference.

Safety and warning information 01
Installing your new appliance..... 13
Description of the appliance..... 20
Display controls..... 21
Using your appliance..... 25
Cleaning and care..... 27
Helpful hints and tips..... 29
Troubleshooting..... 30
Disposal of the appliance..... 34

Safety and warning information

For your safety and correct usage before installing and first using the appliance, read this user manual carefully, including its hints and warnings. To avoid unnecessary mistakes and accidents, it is important to make sure that all people using the appliance are thoroughly familiar with its operation and safety features. Save these instructions and be sure that they remain with the appliance if it is moved or sold, so that anyone using it throughout its life, will be properly informed on its usage and safety notices. For the safety of life and property, keep the precautions of these user's instructions as the manufacturer is not responsible for damages caused by omission.



Safety for children and others who are vulnerable people

According to EN standard

This appliance can be used by children aged from 8 years and above and persons with reduced physical, sensory or mental capabilities or lack of experience and knowledge if they have been given supervision or instruction concerning use of the appliance in a safe way and understand the hazards involved. Children shall not play with the appliance. Cleaning and user maintenance shall not be made by children without supervision.

Safety and warning information



Safety for children and others who are vulnerable people

According to IEC standard

This appliance is not intended for use by persons (including children) with reduced physical, sensory or mental capabilities, or lack of experience and knowledge, unless they have been given supervision or instruction concerning use of the appliance by a person responsible for their safety.

Keep all packaging away from children as there is risk of suffocation.

If you are discarding the appliance, pull the plug out of the socket, cut the connection cable (as close to the appliance as you can) and remove the door to prevent children playing from suffering an electric shock or from closing themselves inside it.

If this appliance, featuring a magnetic door seals, is to replace an older appliance having a spring lock (latch) on the door or lid, be sure to make the spring lock unusable before you discard the old appliance. This will prevent it from becoming a death trap for a child.

Safety and warning information

General safety

- **WARNING**
  This appliance is intended to be used in household and similar applications such as 1.staff kitchen areas in shops, offices and other working environments; 2.farm houses and by clients in hotels, motels and other residential type environments;
  1. bed and breakfast type environments;
  2. catering and similar non-retail applications.
- **WARNING**
  Do not store explosive substances such as aerosol cans with a flammable propellant in this appliance.
- **WARNING**
  If the supply cord is damaged, it must be replaced by the manufacturer, its service agent or similarly qualified persons in order to avoid a hazard.
- **WARNING**
  Keep ventilation openings, in the appliance enclosure or in the built-in structure, clear of obstruction.

Safety and warning information

General safety

- **WARNING**
  Do not use mechanical devices or other means to accelerate the defrosting process,other than those recommended by the manufacturer.
- **WARNING**
  Do not damage the refrigerant circuit.
- **WARNING**
  Do not use electrical appliances inside the food storage compartments of the appliance, unless they are of the type recommended by the manufacturer.
- **WARNING**
  The refrigerant and insulation blowing gas are flammable. When disposing of the appliance, do so only at an authorized waste disposal centre. Do not expose to flame.
- **WARNING**
  The refrigerant and insulation blowing gas are flammable. When disposing of the appliance, do so only at an authorized waste disposal centre. Do not expose to flame.
- **WARNING**
  When positioning the appliance, ensure the supply cord is not trapped or damaged.

Safety and warning information

General safety

- **WARNING**
  Do not locate multiple portable socket-outlets or portable power supplies at the rear of the appliance.

Replacing the illuminating lamps

- **WARNING**
  The illuminating lamps must not be replaced by the user! If the illuminating lamps is damaged, contact the customer helpline for assistance. This warning is only for refrigerators that contain illuminating lamps.

Refrigerant

The refrigerant isobutene (R600a) is contained within the refrigerant circuit of the appliance, a natural gas with a high level of environmental compatibility, which is nevertheless flammable. During transportation and installation of the appliance, ensure that none of the components of the refrigerant circuit becomes damaged. The refrigerant (R600a) is flammable.

Safety and warning information

Refrigerant

- **WARNING**
  Refrigerators contain refrigerant and gases in the insulation. Refrigerant and gases must be disposed of professionally as they may cause eye injuries or ignition. Ensure that tubing of the refrigerant circuit is not damage prior to proper disposal.
- **WARNING**
  Risk of fire / flammable materials If the refrigerant circuit should be damaged:
  1. Avoid opening flames and sources of ignition.
  2. Thoroughly ventilate the room in which the appliance is situated.

  It is dangerous to alter the specifications or modify this product in any way. Any damage to the cord may cause a short circuit, fire, and/or electric shock.

Safety and warning information

Electrical safety

1. The power cord must not be lengthened.
2. Make sure that the power plug is not crushed or damaged. A crushed or damaged power plug may overheat and cause a fire.
3. Make sure that you can access the main plug of the appliance.
4. Do not pull the main cable.
5. If the power plug socket is loose, do not insert the power plug. There is a risk of electric shock or fire.
6. You must not operate the appliance without the interior lighting lamp cover.
7. The fridge is only applied with power supply of single phase alternating current of 220~240V/50Hz. If fluctuation of voltage in the district of user is so large that the voltage exceeds the above scope, for safety sake, be sure to apply A.C. Automatic voltage regulator of more than 350W to the fridge. The fridge must employ a special power socket instead of common one with other electric appliances. Its plug must match the socket with ground wire.

Safety and warning information

Daily use

- Do not store flammable gases or liquids in the appliance, There is a risk of an explosion.
- Do not operate any electrical appliances in the appliance (e.g.electric ice cream makers,mixers etc.).
- When unplugging always pull the plug from the mains socket, do not pull on the cable.
- Do not place hot items near the plastic components of this appliance.
- This refrigerating appliance is not intended to be used as a built-in appliance.
- Do not place food products directly against the air outlet on the rear wall.
- Store pre-packed frozen food in accordance with the frozen food manufacturers' instructions.
- The appliances manufacturers' storage recommendations should be strictly adhered to. Refer to relevant instructions for storage.
- Do not place carbonated or fizzy drinks in the freezer compartment as it creates
  pressure on the container, which may cause it to explode, resulting in damage to the appliance.

Safety and warning information

- Frozen food can cause frost burns if consumed straight from the freezer compartment.
- Do not place the appliance in direct sunlight.
  Keep burning candles, lamps and other items with naked flames away from the appliance so that do not set the appliance on fire.
- The appliance is intended for keeping food stuff and/or beverages in normal household as explained in this instruction booklet. The appliance is heavy. Care should be taken when moving it.
- Do not remove nor touch items from the freezer compartment if your hands are damp/wet,as this could cause skin abrasions or frost/freezer burns.
- Never use the base, drawers, doors etc. to stand on or as supports.
  Frozen food must not be refrozen once it has been thawed out.
- Do not consume ice popsicles or ice cubes straight from the freezer as this can cause freezer burn to the mouth and lips. ,
- To avoid items falling and causing injury or damage to the appliance, do not overload the door racks or put too much food in the crisper drawers.

Safety and warning information

Caution! Care and cleaning

- Before maintenance, switch off the appliance and disconnect the mains plug from the mains socket.
- Do not clean the appliance with metal objects, steam cleaner, ethereal oils, organic solvents or abrasive cleansers.
- Do not use sharp objects to remove frost from the appliance. Use a plastic scraper.

Safety and warning information

Installation Important

- For electrical connection carefully, follow the instructions given in this manual. Unpack the appliance and check if there are damages on it.
- Do not connect the appliance if it is damaged. Report possible damages immediately to the place you bought it. In this case retain packing.
- It is advisable to wait at least four hours before connecting the appliance to allow the oil to flow back in the compressor.
- Adequate air circulation should be around the appliance, lacking this leads to overheating. To achieve sufficient ventilation, follow the instructions relevant to installation.
- Wherever possible the back of the product should not be too close to a wall to avoid touching or catching warm parts (compressor, condenser) to prevent the risk of fire, follow the instructions relevant to installation.
- The appliance must not be locate close to radiators or cookers.
- Make sure that the mains plug is accessible after the installation of the appliance.

Safety and warning information

Service

- Any electrical work required to do the servicing of the appliance should be carried out by qualified electrician or competent person.
- This product must be serviced by an authorized Service Center, and only genuine spare parts must be used:
  1. If the appliance is Frost Free.
  2. If the appliance contains freezer compartment.
- Queensland service notes: In Queensland, the Authorized Service Person Must hold a Gas Work Authorization for hydrocarbon refrigerants to carry out servicing or repairs which involve removal of covers.

Note

Children aged from 3 to 8 years are allowed to load and unload refrigerating appliances. (This clause applies only to the EU region.)

Installing your new appliance

Before using the appliance for the first time, you should be aware of the following tips.

Ventilation of appliance

In order to improve efficiency of the cooling system and save energy, it is necessary to maintain good ventilation around the appliance for the dissipation of heat. For this reason, sufficient clear space should be available around the refrigerator.

Suggest:

It is advisable for there to be at least 50mm of space from the back to the wall, at least 100mm from its top, at least 50mm from its side to the wall and a clear space upfront to allow the door to open 130°. See in follow diagrams. Please refer to the diagrams below.

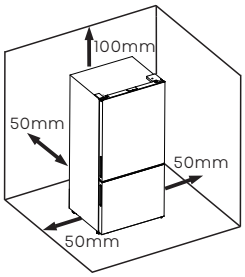

Relevant information (mm)

W	W1	D	D1	D2
794	520	622	698	1439

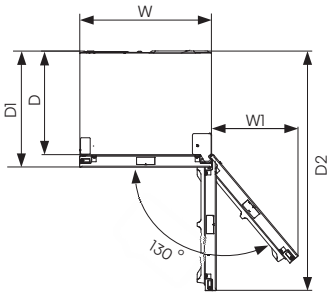

Note

This appliance performs well in the climate class from SN to ST. It may not work properly if being left at a temperature above or below the indicated range for a long period.

Climate class	Ambient temperature
SN	+10°C to +32°C
N	+16°C to +32°C
ST	+16°C to +38°C
T	+16°C to +43°C

Stand your appliance in a dry place to avoid high moisture damage. Keep the appliance out of direct sunlight, rain or frost. Stand the appliance away from heat sources such as stoves, fires or heaters.

Installing your new appliance

Leveling of appliance

- For sufficient leveling and air circulating in the lower rear section of the appliance, the bottom feet may need to be adjusted. You can adjust them manually by hand or by using a suitable spanner.
- To allow the doors to self-close, tilt back the top backwards at about 15mm by turning the adjustable feet.
- Whenever you want to move the appliance, remember to turn the feet back up, so that the appliance can roll freely. Reinstall the appliance when relocating.

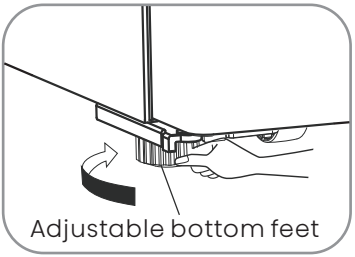

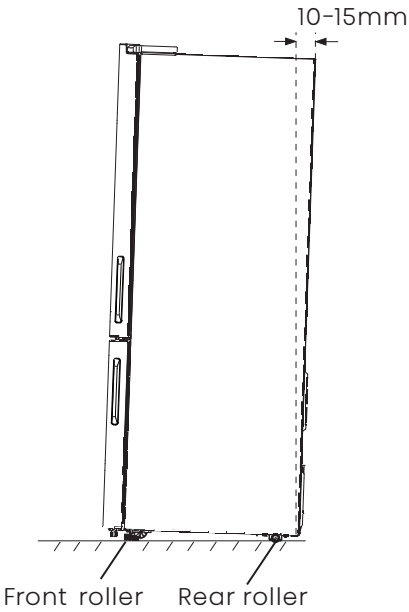

Warning

- For proper installation, this refrigerator must be placed on a level surface of hard material that is the same height as the rest of the flooring. This surface should be strong enough to support a fully loaded refrigerator.
- The rollers, which are not castors, should be only used for forward or backward movement. Moving the refrigerator sideways may damage your floor and the rollers.
- It is advisable to adjust both the bottom feets until they touch the ground after placing the refrigerator.

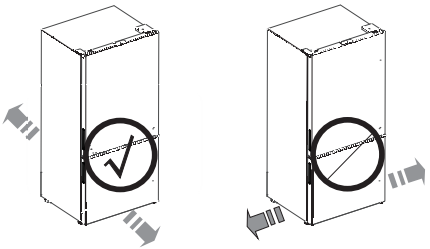

Installing your new appliance

Reversing the door

- The side at which the door opens can be changed, from the right side (as supplied) to the left side if required.

Tools you will need:

Not provided	
	
Wrench/8mm	Cross screwdriver
	
Thin-blade screwdriver	Monkey wrench
	
Thin blade(utility knife e.g.)	
Additional parts (in the plastic bag)	
	
Allen Wrench/4mm	
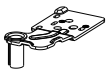	
Upper Hinge-Left	Upper Hinge Cover-left
	
Screw Hole Cover right	Middle Hinge-left
	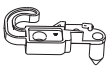
Left stop Block for fridge door	Left Door Stopper for fridge door

Additional parts (in the plastic bag)	
	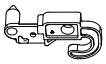
Left stop Block for freezer door	Left door Stopper for freezer door

Warning

- When reversing the door, the appliance must not be connected to the Power, Ensure that the plug is removed from the power socket.

Note

- If required, you may lay the refrigerator on its back in order to gain access to the base, you should rest it on soft foam packaging or similar material to avoid damaging the backboard of the refrigerator.

To reverse the door, the following steps generally recommended.
1. Stand the refrigerator upright. Open the door to take out all door racks (to avoid damage) and then close the door.

Installing your new appliance

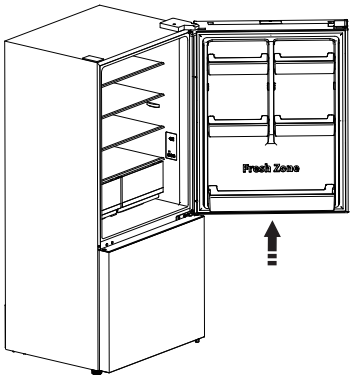

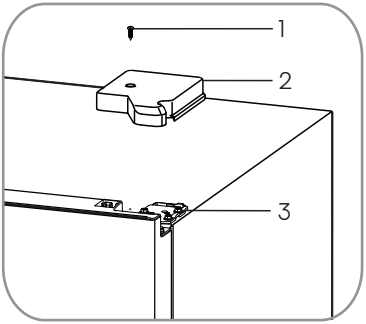

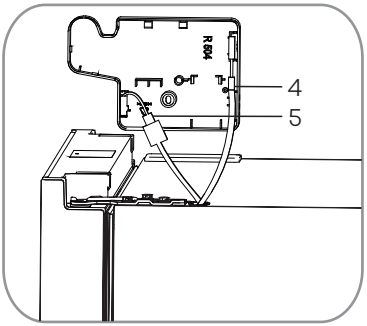

Caution

- Please slightly squeeze the door rack from two sides toward center and inside of door rack, and then move it upward when taking out the upper rack and lower rack.

2. With the door closed, unscrew 1 and remove upper hinge cover-right 2 from the right-top corner of cabinet. Remove the reed switch 4 and the humidity sensor unit 5 from the cabinet and upper hinge cover-right 2, Install them on the upper hinge cover-left (provided in the plastic accessory bag). Unscrew the three screws 3 which are used for fixing the upper hinge-right (see the picture below).

3. Remove the upper hinge-right (please hold upper door by hand when installing.

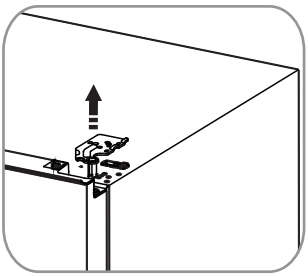

Installing your new appliance

4. Remove the upper door from the middle hinge by carefully lifting the door straight up. Then place the upper door on a smooth surface with its panel upwards.

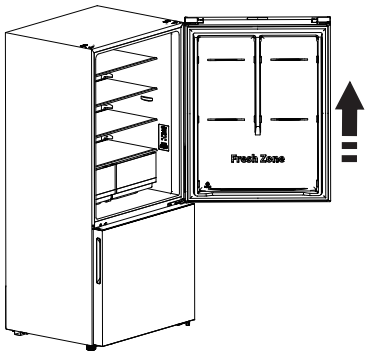

5. Unscrew the two screws 6, then take out the right door stopper for fridge door 7 and the right stopper block for fridge door 8, Install the replacement left door stopper 9 and left stopper block 10 (provided in the plastic accessory bag) to the left side with screws 6. Keep 7 and 8 with the appliance for future reference.

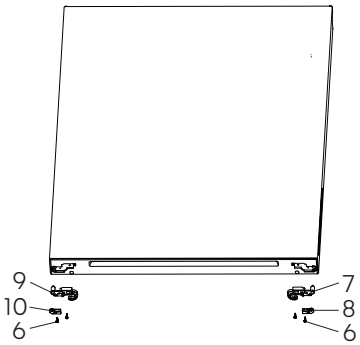

6. Use the Allen wrench (provided in the plastic accessory bag) to unscrew the screws used to fix the middle hinge-right and remove middle hinge -right. Then remove the lower door.

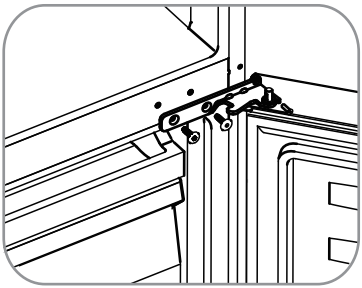

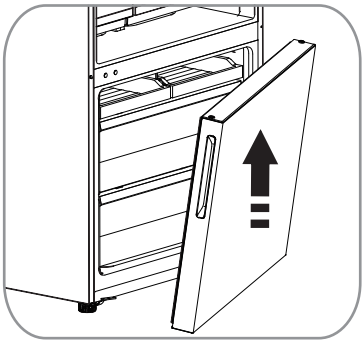

7. Place the lower door on a smooth surface with its panel upwards. Unscrew the two screws 6, then take out the right door stopper for freezer door 11 and the right stopper block for freezer door 12, Install replacement left door stopper 13 and left stopper block 14 (provided in the plastic accessory bag) to the left side with screws 6. Keep 11 and 12 with the appliance for future reference.

Installing your new appliance

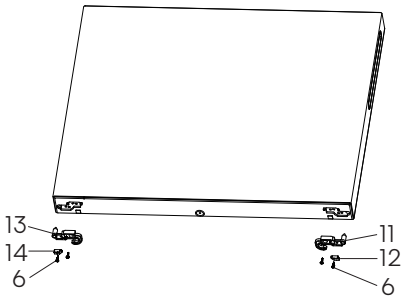

8. Install the screw hole cover-right 15 (provided in the plastic accessory bag) to the right-top corner of cabinet. Remove screw hole cover-left 16 from the left-top corner of cabinet with the thin-blade screwdriver and Put the screw hole cover-left and upper hinge-right into the plastic accessory bag for future reference.

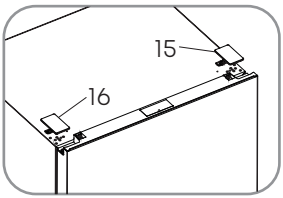

9. Change screw hole covers and screw on middle cover plate from left to right (as shown in figure below).

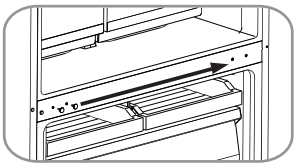

10. Lie the refrigerator backwards, Remove adjustable bottom feet part 17, remove 3 self-tapping screws 18 from the lower hinge –right 19. Unscrew the lower hinge-right axis then install it on the reverse hole site, and tighten into position (change it into lower hinge-left) . Install the lower hinge-left to the left-bottom corner of cabinet, Then fix it with 3 screws, finally install adjustable bottom feet part 17 on the left-bottom corner and right-bottom corner of cabinet.

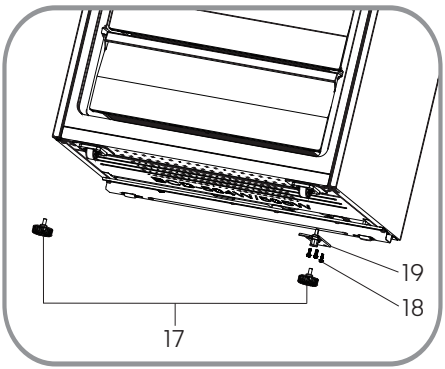

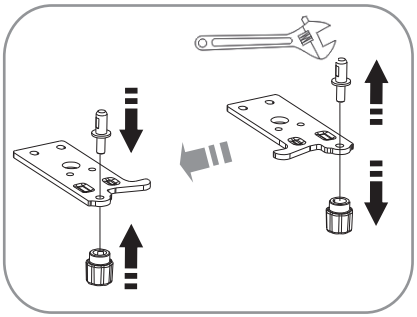

Installing your new appliance

11. Stand the refrigerator upright and carefully slot the lower door onto the lower hinge-left pin and hold it in position. Install middle hinge-left (provided in the plastic accessory bag) and ensure the lower door in place.

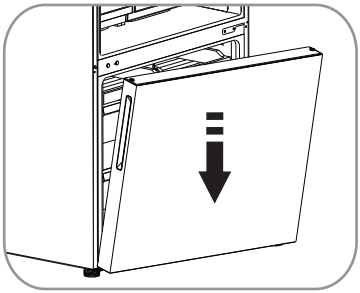

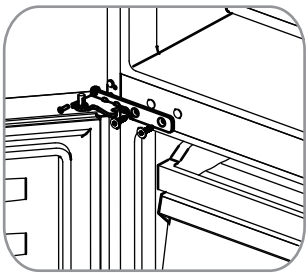

12. Carefully slot the upper door onto the middle hinge pin and hold in position. Move the upper door to an appropriate position, adjust the upper hinge-left (provided in the plastic accessory bag) and upper door, then fit the hinge pin into the hinge hole at the top of the upper door to secure it in place. Then fix the upper hinge part with screws (Please carefully hold the upper door by hand when installing)

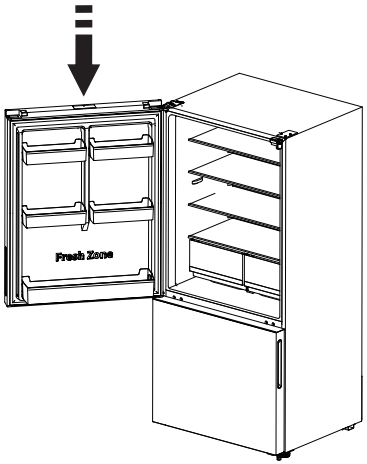

13. Assemble the upper hinge cover-left to match the hinge. Install the door racks to original position. Keep the upper hinge cover-right with the appliance for future reference.

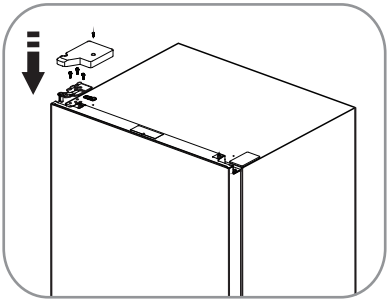

Description of the appliance

View of the appliance

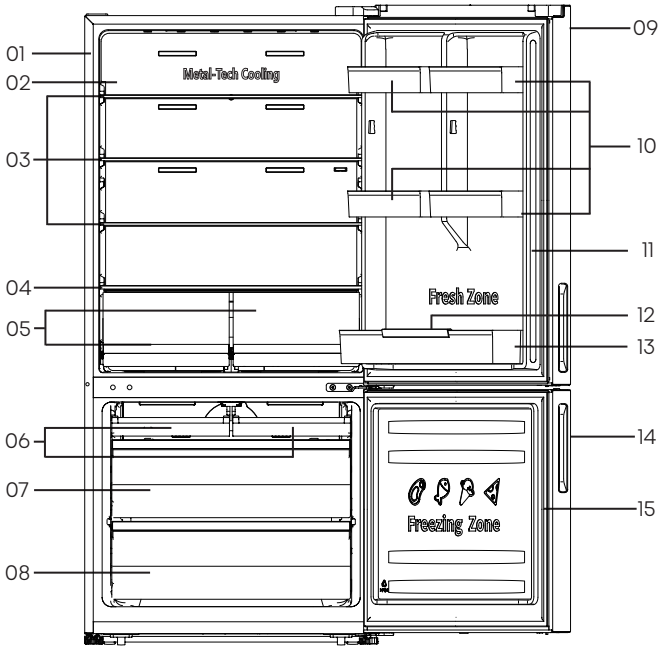

01. Cabinet
02. Wind channel
03. Glass shelf
04. Crisper cover
05. Fruit & Vegetable Crisper
06. Upper freezer drawer
07. Middle freezer drawer
08. Lower freezer drawer
09. Fridge door
10. Small rack
11. Fridge gasket
12. Bottle holder
13. Lower rack
14. Freezer door
15. Freezer gasket

Note

Due to constant development of our products, your refrigerator may be slightly different from this instruction manual, but its functions and usage remain the same.
To get the best energy efficiency of this product, please place all shelves, drawers on their original position as the illustration above.

Display controls

- Use your appliance according to the following control regulations, your appliance has the corresponding functions and modes as the display panels showed in the pictures below.

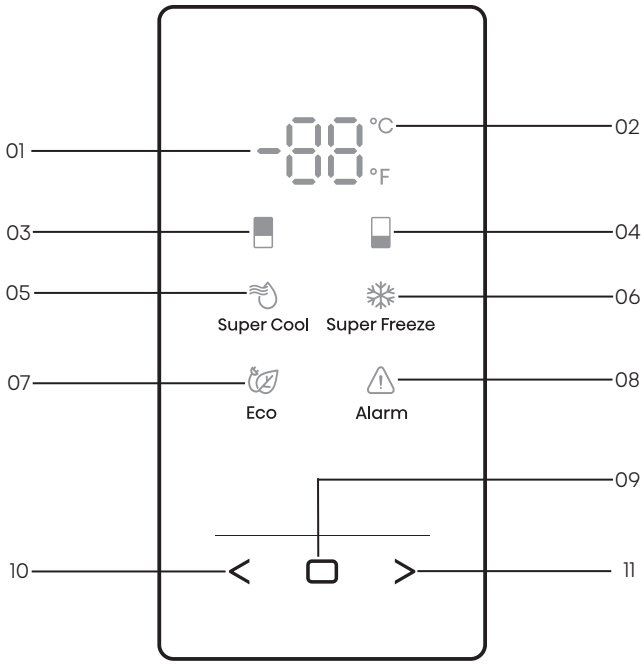

01. Temperature Area
02. Celsius/Fahrenheit Indicator
03. Fridge Compartment Icon
04. Freezer Compartment Icon
05. Super Cool Icon
06. Super Freeze Icon
07. Eco Icon
08. Alarm Icon
09. Confirm Control
10. Function selector Control : Left Control
11. Function selector Control : Right Control

Display controls

Note

Note:

- Once the appliance is powered on, all icons on the display panel will be lit for 3 seconds with a buzzer sound.
- All the icons will go off on the condition of all keys untouched and all doors closed for one minute.
- The control panel will light up when the door is open or you touch any button.
- Setting the refrigerator running at high temperature will accelerate food decomposition. For optimum food preservation, we recommend that when starting the refrigerator for the first time, the temperature of fridge is set to 4°C (39°F), and that of the freezer to -18°C (0°F).

Caution!

- The temperature only means the average temperature of the whole refrigerator cabinet. Temperatures inside each compartment may vary from those displayed on the panel, depending on how much food stored and where the refrigerator is placed. In addition, the actual temperature from higher room and lower room will be different.



"Switching Celsius and Fahrenheit"

1. Press" < " or " > " repeatedly until the Celsius/Fahrenheit Indicator " °C " or" °F" blinks.
2.Press the Confirm Control " ▭ " for the first time, and " °C " or " °F " will be always on. After that, each time you press the Confirm Control " ▭ ", the temperature will be switched between °C and °F, and the temperature setting value of the corresponding unit will be displayed in the temperature area.



"Fridge temperature control"

1.Press" < " or " > " repeatedly until the Fridge icon " ▮ " blinks.
2. Press the Confirm Control " ▭ " for the first time, and the Fridge icon " ▮ " will be always on . After that, press the Confirm Control " ▭ " repeatedly to cycle through the available temperature settings, from 8°C to 2°C if you have set temperature type to Celsius.

8 °C - 7°C - 6°C - 5°C
2°C - 3°C - 4°C

Display controls

If you have set temperature type to Fahrenheit, the temperature settings cycle will be from 46°F to 36°F.

46°F - 45°F - 44°F - 43°F - 42°F - 41°F
36°F - 37°F - 38°F - 39°F - 40°F

Note: Each press of the button, the temperature drops one degree.

"Freezer temperature control"

1.Press" < " or " > " repeatedly until the Freezer icon " " blinks.
2. Press the Confirm Control " " for the first time, and the Freezer icon " " will be always on . After that, press the Confirm Control " " repeatedly to cycle through the available temperature settings, from -14°C to -24°C if you have set temperature type to Celsius.

-14°C - -15°C - -16°C - -17°C - -18°C - -19°C
-24°C - -23°C - -22°C - -21°C - -20°C

If you have set temperature type to Fahrenheit, the temperature settings cycle will be from 7°F to -11°F.

7°F - 6°F - 5°F - · · ·
-11°F - -10°F - -9°F

Note: Each press of the button, the temperature drops one degree.

"Super Cool"

The Super Cool feature helps to keep food stored in the refrigerator at the setting temperature during periods of high usage, large grocery loads, or temporarily warm room temperatures, The Super Cool feature lowers the temperature in the fridge compartment to 2°C(36°F) to cool food.

1. Press" < " or " > " repeatedly until the Super Cool icon " " blinks.
2. Press the Confirm Control " " to turn the Super Cool function on or off. When the Super Cool function is turned on, the " " icon lights.
3. When setting fridge temperature, the Super Cool function will turn off and the temperature setting will revert back to the previous setting.

NOTE: Super Cool will automatically turn off after 6 hours.

"Super Freeze"

This Super Freeze feature helps to keep the food stored in the freezer as the setting temperature during periods of high usage, large grocery loads, or temporarily warm room temperatures.

Display controls

The Super Freeze feature lowers the temperature in the freezer compartment to -24°C(-11°F) to freeze the food faster.

1.Press" < " or " > " repeatedly until the Super Freeze icon " ❄ " blinks.
2. Press the Confirm Control " ▭ " to turn the Super Freeze function on or off. When the Super Freeze function is turned on, the " ❄ " icon lights.
3. When setting freezer temperature, the Super Freeze function will turn off and the temperature setting will revert back to the previous setting.
NOTE: Super Freeze will automatically turn off after 52 hours.
When you selecting the Super Freeze function, ensure there are no bottled or canned drinks (especially carbonated drinks) in the freezer compartment. Bottles and cans may explode.



"Eco"

The Eco feature makes the refrigerator worked in an energy saving mode which is useful for reducing energy consumption when you are away.
1. Press" < " or " > " repeatedly until the Eco icon " " blinks.
2. Press the Confirm Control "▭" to turn the Eco function on or off. When the Eco function is turned on, the " " icon lights.
3. When setting fridge or freezer temperature, the Eco function will turn off and the temperature setting will revert back to the previous setting.
NOTE: When the Eco function is on, the temperature of fridge is automatically switched to 6°C (43°F) and the temperature of freezer is automatically switched to -17°C (1°F).



"Door Open Alarm"

If the fridge door is opened for longer than 2 minutes, the control panel will display "dr", the " ⚠ " icon will blink and the buzzer will sound 3 times every minute for 8 minutes.
Pressing and holding " ▭ " and " > " buttons at the same time for three seconds during door alarm, the " ⚠ " icon will be on and buzzing will stop. Closing the fridge door, the " ⚠ " icon will go off and buzzing will stop.

"Demo Mode"

Demo mode is for store display, and it prevents the refrigerator from generating cool air. In this of Cooling Off Mode, the refrigerator may seem like it is working but it will not make cool air.
If you enter the Demo mode, the temperature area will show “OF”. To switch off Demo mode, press and hold " < " and " > " buttons at the same time for 5 seconds and the buzzer gave a long sound.

Using your appliance

This section tells you how to use most of the useful features. We recommend that you read through them carefully before using the appliance.

Door rack

- It is suitable for the storage of canned liquid, bottled drinks and packed food, etc. Do not place too many heavy things in the racks.

Shelf in Refrigerator chamber

- There are shelves in refrigerator chamber, and they can be taken out to be cleaned.

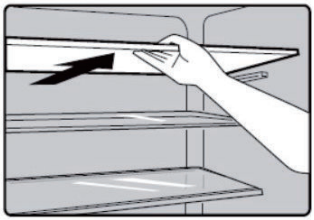

Crisper in Refrigerator chamber

- The crisper is suitable for storage of vegetables and fruit, etc.
- Firstly Pull the crisper out in level, Secondly tip up it then you can take out the crisper.
- According to the opposite sequence you can position the crisper rightly.

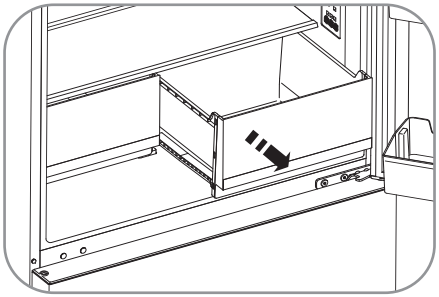

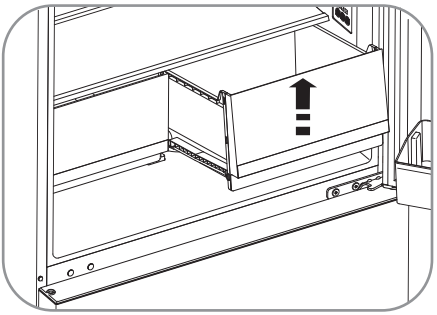

Freezer chamber

- The freezer chamber is suitable for storage of foods required to be frozen, such as meat, ice.

Caution

Never close the freezer door while the drawers, installation bracket are extended. It may damage the unit.
Ensure that drink bottles are not left in the freezer for a longer time than needed as freezing liquid may cause the bottle to break.

Bottle holder

- The bottle holder can be used to fix the bottle. You can place it on the small or lower door rack and slide to left or right as you prefer.
- It is advisable to put the tall bottles or glass bottles in rack with bottle holder.

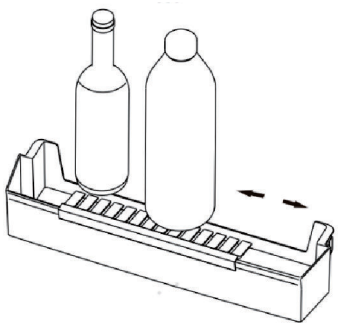

Cleaning and care

- For hygienic reasons the appliance (including exterior and interior accessories) should be cleaned regularly (at least every two months).

Warning

- The appliance must not be connected to the mains during cleaning. Dange of electrical
- shock! Before cleaning switch the appliance off and remove the plug from the mains socket.

Exterior cleaning

To maintain good appearance of your appliance, you should clean it regularly.

- Wipe the digital panel and display panel with a clean, soft cloth.
- Spray water onto the cleaning cloth instead of spraying directly on the surface of the appliance. This helps ensure an even distribution of moisture to the surface.
- Clean the doors, handles and cabinet surfaces with a mild detergent and then wiped dry with a soft cloth.

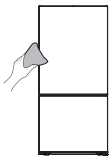

Warning

- Do not use sharp objects as they are likely to scratch the surface. Do not use Thinner, Car detergent
- Clorox, ethereal oil, abrasive cleansers or organic solvent such as Benzene for cleaning. They may damage the surface of the appliance and may cause fire.

Interior cleaning

- You should clean the appliance interior regularly. It will be easier to clean when food stocks are low. You can remove the drawers and shelves for a more thorough clean.
- Wipe the inside of the freezer with a weak solution of bicarbonate of soda, and then rinse with warm water using a wrung-out sponge or cloth. Wipe completely dry before replacing the shelves and baskets.
- Thoroughly dry all surfaces and removable parts before putting them back into place.

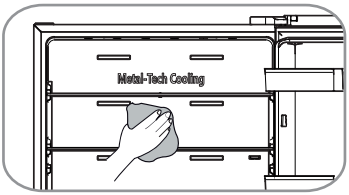

Cleaning and care

- Although this appliance automatically defrosts, a layer of frost may occur on the freezer compartment's interior walls if the freezer door is opened frequently or kept open too long.
- If the frost is too thick, choose a time when the freezer is nearly empty and proceed as follow:
  1. Remove existing food and accessories baskets, unplug the appliance from the mains power and leave the doors open. Ventilate the room thoroughly to accelerate the process.
  2. When defrosting is completed, clean your freezer as described above.

Warning

- Do not use sharp objects to remove frost from the freezer compartment.
- Only after the interior is completely dry should the appliance be switched back on and plugged back into the mains socket.

Door seals cleaning

- Take care to keep door seals clean. Sticky food and drinks can cause seals to stick to the cabinet and tear when you open the door. Wash the seals with a mild detergent and warm water. Rinse and dry them thoroughly after cleaning.

Replacing the LED light

- To replace the LED light, the below steps can be followed:
  1. Unplug your appliance.
  2. Hold a thin blade, insert it into the gap at either end of the lampshade, and tilt one end of the lampshade.
  3. Move the blade insertion position to the other end and tilt the lampshade section by section until the lampshade falls off.
  4. Press the elastic snap of the light box with a thin-blade screwdriver, and pull one end of the elastic snap of the LED light until the LED light is detached and then pull out the connecting terminal of the LED light.
  5. Replace the LED light, install it and lampshade correctly in place.

Warning

- The LED light should be replaced by a professional. If the LED light is damaged, contact the customer helpline for assistance.

Helpful hints and tips

Energy saving tips

We recommend that you follow the tips to save energy.

- Try to avoid keeping the door open for long periods in order to conserve energy.
- Ensure the appliance is away from any sources of heat (Direct sunlight, electric oven or cooker etc.)
- Don't set the temperature colder than necessary.
- Don't store warm food or evaporating liquid in the appliance.
- Place the appliance in a well ventilated, humidity free room. Please refer to the installing your new appliance chapter.
- The description of appliance diagram shows the correct combination for the drawers, crisper and shelves, do not adjust the combination as this is designed to be the most energy efficient configuration.

Hints for fresh food refrigeration

- Do not place hot food directly into the refrigerator or freezer, the internal temperature will increase resulting in the compressor having to work harder and will consume more energy.
- Do cover or wrap the food, particularly if it has a strong flavor.
- Place food properly so that air can circulate freely around it.

Hints for refrigeration

- Meat (All Types) Wrap in polythene food: wrap and place on the glass shelf above the vegetable drawer. Always follow food storage times and use by dates suggested by manufacturers.
- Cooked food, cold dishes, etc: They should be covered and may be placed on any shelf.
- Fruit and vegetables: They should be stored in the special drawer provided.
- Butter and cheese: Should be wrapped in airtight foil or plastic film wrap.
- Milk bottles: Should have a lid and be stored in the door racks.

Hints for freezing

- When first starting-up or after a period out of use, let the appliance run at least 2 hours on the higher settings before putting food in the compartment.
- Prepare food in small portions to enable it to be rapidly and completely frozen and make it possible to subsequently thaw only the quantity required.
- Wrap up the food in aluminum foil or polyethylene food wraps which are airtight.
- Do not allow fresh, unfrozen food to touch the food which is already frozen to avoid patrial defrosting.

Helpful hints and tips

- It is recommended to label and date each frozen package in order to keep track of the storage time.

Hints for fresh food refrigeration

- Ensure that frozen food has been stored correctly by the food retailer .
- Once defrosted, food will deteriorate rapidly and should not be re-frozen.
- Do not exceed the storage period indicated by the food manufacturer.

Switching off your appliance

- If the appliance needs to be switched off for an extended period, the following steps should be taken to prevent mould on the appliance.
  1. Remove all food.
  2. Remove the power plug from the mains socket.
  3. Clean and dry the interior thoroughly.
  4. Ensure that all the doors are wedged open slightly to allow air to circulate.

Troubleshooting

If you experience a problem with your appliance or are concerned that the appliance is not functioning correctly, you can carry out some easy checks before calling for service, please see below.

Warning

Don't try to repair the appliance yourself. If the problem persists after you have made the checks mentioned below, contact a qualified electrician, authorized service engineer or the shop where you purchased the product.

Problem	Possible cause & Solution
Appliance is not working correctly	Check whether the power cord is plugged into the power outlet properly.
	Check the fuse or circuit of your power supply, replace if necessary.

Troubleshooting

Problem	Possible cause & Solution
Appliance is not working correctly	The ambient temperature is too low. Try setting the chamber temperature to a colder level to solve this problem.
	It is normal that the refrigerator is not operating during the automatic defrost cycle, or for a short time after the appliance is switched on to protect the compressor.
Odours from the compartments	The interior may need to be cleaned.
	Some food, containers or wrapping cause odours.
Noise from the appliance	The sounds below are quite normal: • Compressor running noises. • Air movement noise from the small fan motor in the freezer compartment or other compartments. • Gurgling sound similar to water boiling. Popping noise during automatic defrosting. • Clicking noise before the compressor starts.
	Other unusual noises are due to the reasons below and may need you to check and take action: • The cabinet is not level. • The back of appliance touches the wall. • Bottles or containers knocking against each other.
The motor runs continuously	It is normal to frequently hear the sound of the motor, it will need to run more when in following circumstances: • Temperature setting is set colder than necessary. • Large quantity of warm food has recently been stored within the appliance. • The temperature outside the appliance is too high. • Doors are kept open too long or too often. • After your installing the appliance or it has been switched off for a long time.

Troubleshooting

Problem	Possible cause & Solution
A layer of frost occurs in the compartment	Check that the air outlets are not blocked by food and ensure food is placed within the appliance to allow sufficient ventilation. • Ensure the door can be fully closed . To remove the frost, please refer to the cleaning and care chapter.
Temperature inside is too warm	You may have left the doors open too long or too frequently; • Or the doors are kept open by some obstacle; • Or the appliance is located with insufficient clearance at the sides, back and top.
Temperature inside is too cold	Increase the temperature by following the “Display controls” chapter.
Doors can’t be closed easily	Check whether the top of the refrigerator is tilted back by 10-15mm to allow the doors to self close, or if something inside is preventing the doors from closing.
Water drips on the floor	The water pan (located at the rear bottom of the cabinet) may not be properly leveled, or the draining spout underneath the top of the compressor depot may not be properly positioned to direct water into this pan, or the water spout is blocked , or the water is not fully inserted into the connector. • You may need to pull the refrigerator away from the wall to check the pan, spout and connector. • Check if the refrigerator is power-off for a long time, this may cause the ice in the bucket to melt into water, and flow to the floor.
The light is not working	• the LED light may be damaged. Refer to replace LED lights in cleaning and care chapter. • the control system has disabled the lights due to the door being kept open too long, close and reopen the door to reactivate the lights.

Troubleshooting

Problem	Possible cause & Solution
You can hear water bubbling in the refrigerator	• This is normal. The bubbling comes from the refrigerant coolant liquid circulating through the refrigerator.

Disposal of the appliance

It is prohibited to dispose of this appliance as household waste.

Packaging materials

Packaging materials with the recycle symbol are recyclable. Dispose of the packaging into a suitable waste collection container to recycle it.

Before disposal of the appliance

1. Pull out the mains plug from the mains socket.
2. Cut off the power cord and discard with the mains plug

Warning

Refrigerators contain refrigerant and gases in the insulation.
Refrigerant and gases must be disposed of professionally as they may cause eye injuries or ignition. Ensure that tubing of the refrigerant circuit is not damage prior to proper disposal.

	Correct Disposal of this product
	This marking indicates that this product should no be disposed with other household wastes throughout the EU. To prevent possible harm to the environment or human health from uncontrolled waste disposal, recycle it responsibly to promote the sustainable reuse of material resources. To return your used device, please use the return and collection systems or contact the retailer where the product was purchased. They can take this product for environmental safe recycling.

Suggestion of using the appliance

To avoid contamination of food, please respect the following instructions

- Opening the door for long periods can cause a significant increase of the temperature in the compartments of the appliance.
- Clean regularly surfaces that can come in contact with food and accessible drainage systems.
- Store raw meat and fish in suitable containers in the refrigerator, so that it is not in contact with or drip onto other food.
- Two-star frozen-food compartments are suitable for storing pre-frozen food, storing or making ice cream and making ice cubes.
- One-, two- and three-star compartments are not suitable for the feezing of fresh food.

Order	Compartments type	Target storage temp.[°C]	Appropriate food
1	Fridge	+2~+8	Eggs, cooked food, packaged food, fruits and vegetables, dairy products, cakes, drinks and other foods which are not suitable for freezing.
2	(***)*-Freezer	≤-18	Seafood (fish, shrimp, shellfish), freshwater aquatic products and meat products (recommended for 3 months ,the longer the storage time, the worse the taste and nutrition), suitable for frozen fresh food.
3	***-Freezer	≤-18	Seafood (fish, shrimp, shellfish), freshwater aquatic products and meat products (recommended for 3 months, the longer the storage time, the worse the taste and nutrition),are not suitable for frozen fresh food.
4	Wine	+5~+20	Red wine,white wine,sparkling wine etc.

Suggestion of using the appliance

Order	Compartments type	Target storage temp.[°C]	Appropriate food
5	**-Freezer	⩽-12	Seafood (fish, shrimp, shellfish), freshwater aquatic products and meat products (recommended for 2 months, the longer the storage time, the worse the taste and nutrition), are not suitable for frozen fresh food.
6	*-Freezer	⩽-6	Seafood (fish, shrimp, shellfish), freshwater aquatic products and meat products (recommended for 1 month, the longer the storage time, the worse the taste and nutrition), are not suitable for frozen fresh food.
7	0-star	-6~0	Fresh pork, beef, fish, chicken, some packaged processed foods, etc. (Recommended to eat within the same day, preferably not later than 3 days). Partially packed/wrapped up encapsulated processed foods (non-freezable foods).
8	chill	-2~+3	Fresh/frozen pork, beef, chicken, freshwater aquatic products, etc.(7 days below 0 °C and above 0 °C is recommended for consumption within that day, preferably no more than 2 days). Seafood (less than 0°C for 15 days, it is not recommended to store above 0°C).
9	Fresh Food	0~+4	Fresh pork, beef, fish, chicken, cooked food, etc. (Recommended to eat within the same day, preferably no more than 3 days).

Suggestion of using the appliance

Note

please store different foods according to the compartments or target storage temperature of your purchased products.

- If the refrigerating appliance is left empty for long periods, switch off, defrost, clean, dry, and leave the door open to prevent mould developing within the appliance.

Warning

Food needs to be packed in bags before putting into the refrigerator, and liquids need to be packed in bottles or capped containers to avoid the problem that the product design structure is not easy to clean.

Hisense

life reimagined