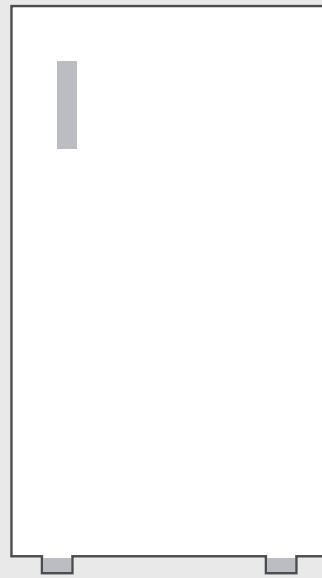

Refrigerator

SINGLE DOOR SERIES

USER MANUAL

MERM17B0AWW
MERM17B0ABB
MERM17B0ASL

Warning notices: Before using this product, please read this manual carefully and keep it for future reference.
The design and specifications are subject to change without prior notice for product improvement.
Consult with your dealer or manufacturer for details.
The diagram above is just for reference. Please take the appearance of the actual product as the standard.

THANK YOU

Thank you for choosing Midea! Before using your new Midea product, please read this manual thoroughly to ensure that you know how to operate the features and functions that your new appliance offers in a safe way.

CONTENTS

THANK YOU ---------- 01

SPECIFICATIONS ---------- 02

PRODUCT OVERVIEW ---------- 03

PRODUCT INSTALLATION ---------- 04

OPERATION INSTRUCTIONS ---------- 08

CLEANING AND MAINTENANCE ---------- 10

TROUBLESHOOTING ---------- 11

SPECIFICATIONS

Product model	MERM17B0AWW/MERM17B0ABB/ MERM17B0ASL
Fresh Food Storage Compartment Volume	47L(1.7cu.ft.)
Rated Voltage	115V~
Rated Current	60Hz
Overall Dimension (H x W x D)	19.3 x 18.6 x 17.6 in

PRODUCT OVERVIEW

Names of components

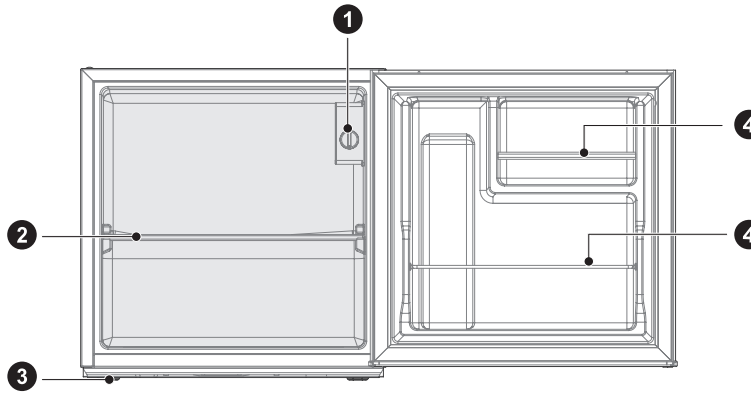

1	Thermostat knob	**3**	Levelling foot
2	Shelf	**4**	Toolbar

ATTENTION

The picture above is only for reference. The actual configuration will depend on the physical product or statement by the distributor.

PRODUCT INSTALLATION

Installation Instructions

Finding a suitable location

- This refrigerator is designed to be free standing only, and should not be recessed or built-in.
- The refrigerator should be placed in a well-ventilated indoor place; the ground shall be flat and sturdy .
- Keep away from heat and avoid direct sunlight. Do not place the refrigerator in moist or watery places to prevent rust or reduction of insulating effect.

Dimensions and Clearances

- Too small of a distance from adjacent items may result in the degradation of freezing capability and increased electricity costs. Allow over 4 inches of clearance from each adjacent wall when installing the appliance.

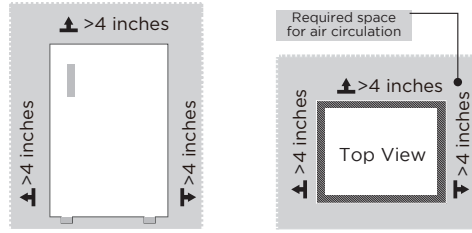

Providing a proper power supply

- Check your local power source. This refrigerator requires a **AC115 V, 60 Hz** power supply.
- Use a receptacle that accepts the grounding prong. The power cord is equipped with a 3-prong (grounding) plug which mates with a standard 3-prong (grounding) wall outlet to minimize the possibility of electric shock hazard from this refrigerator.

⚠ CAUTION

The refrigerator should always be plugged into its own individual electrical outlet which has a voltage rating that matches the rating plate.
Never unplug your refrigerator by pulling on the power cord. Always grip the plug firmlyand pull straight out from the outlet.
When positioning the appliance, ensure the supply cord is not trapped ordamaged.

Start to use

- The refrigerator shall stay for half an hour before connecting power when it is firstly started.
- The refrigerator shall run 2 to 3 hours before loading fresh or frozen foods; the refrigerator shall run for more than 4 hours in summer in advance considering that the ambient temperature is high.

Space requirement diagram (when the door is open and when the door is closed)

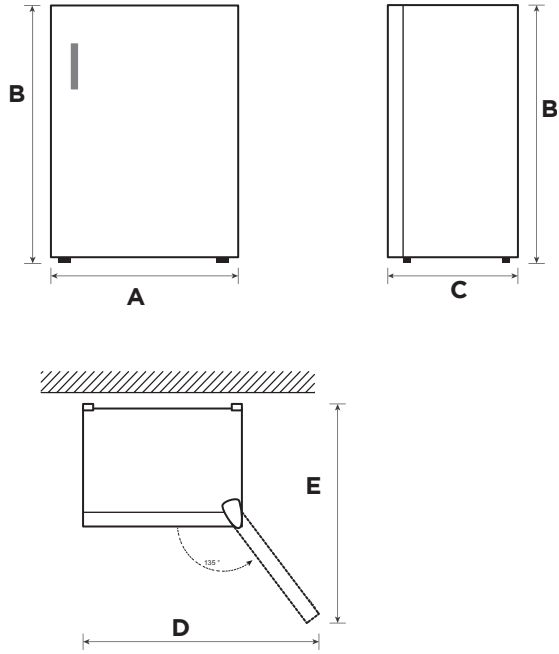

Width	Overall Height	Depth	Width doors open	Depth doors open
A	B	C	D	E
18.6	19.3	17.6	31.1	30.3

Notice: All dimensions in inches.

ATTENTION

The picture above is only for reference. The actual configuration will depend on the physical product or statement by the distributor.

Door right-left change (optional)

List of tools to be provided by the user	
	Philips screwdriver
	Putty knife Thin-blade screwdriver
	5/16″ socket spanner
	Masking tape

Parts to be used for door reverse			
SN	Parts	Quantity	Notes
1	Upper hinge	1	Pre-installed on the refrigerator, still used when door is reversed
2	Hinge cover	1	
3	Tapping locking screw	4	
4	Hole cap	1	Pre-installed on door end caps, still used when door is reversed
5	Pin	2	Pre-installed on the refrigerator, still used when door is reversed
6	Lower hinge assembly	1	
7	Leveling foot	1	

Instructions:

1. Power off the refrigerator, and remove all objects from the door trays.
2. Dismantle the hinge cover, screws and upper hinge, and remove the hole cap and pins from the other side.
3. Remove the door.

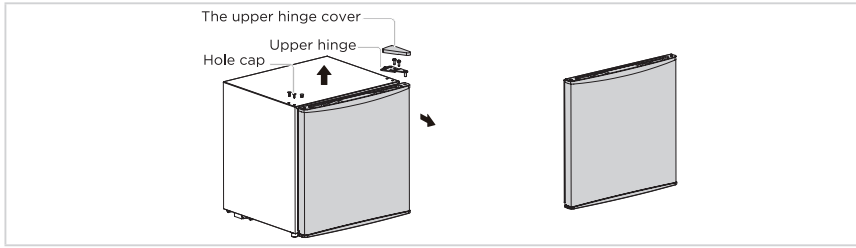

4. Dismantle the lower hinge assembly and leveling foot.
5. Install the stopper lower hinge and leveling foot on lower left side of cabinet and lower right side respectively.

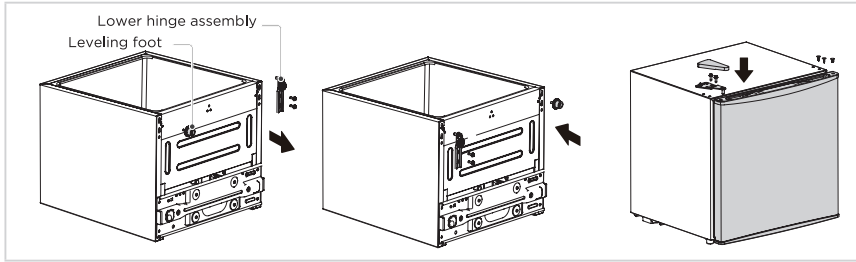

Leveling feet

To avoid vibration, the unit must be leveled.

If required, adjust the leveling screws to compensate for the uneven floor.

The front should be slightly higher than the rear to aid in door closing.

Leveling screws can be turned easily by tipping the cabinet slightly.

Turn the leveling screws counterclockwise to raise the unit, clockwise to lower it.

Tips for energy saving

- Do not place the appliance near cookers, radiators or other heat sources. If the ambient temperature is high, the compressor will run more frequently and for longer, resulting in increased energy consumption.
- Ensure that there is sufficient ventilation at the base of the appliance, on the sides of the appliance and at the back of the appliance. Never cover ventilation openings.
- Please also observe the spacing dimensions in the chapter “Instatation”.
- The arrangement of drawers, shelves and racks as shown in the illustration offers the most efficient use of energy and should therefore be retained as far as possible. All drawers and shelves should remain in the appliance to keep the temperature stable and save energy.
- To obtain a larger storage space (e.g. for large refrigerated/frozen goods), the middle drawers can be removed. The top and bottom drawers and shelves should be removed last if necessary.
- An evenly filled refrigerator/freezer compartment contributes to optimal energy use. Therefore, avoid empty or half-empty compartments.
- Allow warm food to cool before placing it in the refrigerator/freezer. Food that has already cooled down increases energy efficiency.
- Allow frozen food to defrost in the refrigerator. The coldness of the frozen food reduces the energy consumption in the refrigerator compartment and thus increases the energy efficiency.
- Open the door only as briefly as necessary to minimize cold loss. Opening the door briefly and closing it properly reduces energy consumption.
- The door seals of your appliance must be perfectly intact so that the doors close properly and energy consumption is not increased unnecessarily.

OPERATION INSTRUCTIONS

Control panel

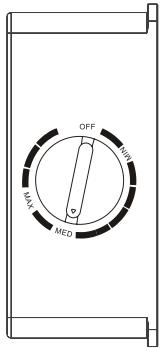

- Turn the temperature control knob to MAX, the internal temperature of the refrigerator becomes lower.
- Turn the temperature control knob to MIN, the internal temperature of the refrigerator becomes higher.
- The letter on the knob only represents the level, but does not mean the specific temperature, the “OFF” means the unit stops working.
- Recommended setting: “MED”.

ATTENTION

The actual control panel may differ from model to model.

- The Refrigerating Chamber is suitable for storage of a variety of fruits, vegetables, beverages and other food for consumption in the short term. Suggested storage time 3 days to 5 days.
- Cooked foods shall not be put in the refrigerating chamber until cooled to room temperature.
- Foods are recommended to be sealed up before putting into the refrigerator.

Tips on storing food

Cooling compartment

- To reduce moisture and subsequent ice build-up, never put liquid into the refrigerator in unsealed containers. Frost tends to concentrate in the coolest parts of the evaporator. Storing uncovered liquids results in a more frequent need for defrosting.
- Never put warm foods in the refrigerator. Cool warm foods down to room temperature and then place in the refrigerator, to ensure adequate air circulation in the refrigerator.
- Foods or food containers should not touch the back wall of the refrigerator because they could freeze to the wall.
- Do not keep regularly opening the refrigerator door.
- Meat and fish, packaged in plastic or foil, that is put in the refrigerator should be used within 1 to 2 days.
- Fruit and vegetables without packaging can be placed in the part designated for fresh fruit and vegetables.

ATTENTION

The optimal temperature setting of each compartment depends on the ambient temperature. Above optimal temperature is based on the ambient temperature of 77 °F.

CLEANING AND MAINTENANCE

Defrosting

Refrigerator shall be manually defrosted.

- Disconnect the plug from the wall socket, open the door and remove all the food to a cool place. It is recommended to remove the frost with a plastic scraper, or let the temperature rise naturally until the frost melts. Then wipe away the remaining ice and water, and plug in socket for switching on the refrigerator.

ATTENTION

Other mechanical devices or other means shall not be used to accelerate except those recommended by the manufacturer. Do not damage the refrigerant circuit.

Stop using

Power failure:

In case of a power failure, even if it is in the summer, foods inside the appliance can be kept for several hours. Please try to reduce the amount of time you open the door during this time in order to keep the food as fresh as possible.

Long-time nonuse:

The appliance shall be unplugged and then cleaned. Please leave the doors open to prevent odor.

Moving:

Before the refrigerator is moved, take all objects inside out, fix the glass partitions, vegetable holder, freezing chamber drawers and etc. with tape, and tighten the leveling feet; close the doors and seal them with tape. During moving, the appliance shall not be laid upside down or horizontally, or be vibrated; the inclination during movement shall be no more than 45°.

ATTENTION

The appliance shall run continuously once it is started. Generally, the operation of the appliance shall not be nterrupted; otherwise the service life may be impaired.
Foods can be preserved for a couple of hours even in summer in case of power failure; it is recommended to reduce the frequency of opening door.

TROUBLESHOOTING

The following simple issues can be handled by the user. Please call the after-sale service department if the issues are not solved.

Problem	Possible reason
Failed operation	• Check whether the appliance is connected to power or whether the plug is in well contact
	• Check whether the voltage is too low
	• Check whether there is a power failure or partial circuits have tripped
Odor	• Odorous foods shall be tightly wrapped
	• Check whether there is any rotten food
	• Clean the inside of the refrigerator
Long-time operation of the compressor	• Long operation of the refrigerator is normal in summer
	• when the ambient temperature is high it is not suggestible having too much food in the appliance at the same time
	• Food shall get cool before being put into the appliance
	• The doors are opened too frequently
Door can not be properly closed	• The door is stuck by food packages Too much food is placed
	• The refrigerator is tiltedr.
Loud noises	• Check whether the floor is level and whether the refrigerator is placed stably
	• Check whether accessories are placed at proper locations
Hot housing	• Heat dissipation of the built-in condenser via the housing, which is normal When housing becomes hot due to high ambient temperature, storage of too much food or shutdown of the compressor is shut down, provide sound ventilation to facilitate heat dissipation
Surface condensation	• Condensation on the exterior surface and door seals of the refrigerator is normal when the ambient humidity is too high. Just wipe the condensate with a clean towel.

Midea

make yourself at home

www.midea.com

© Midea 2022 all rights reserved