FOR PERFECT RESULTS

Thank you for choosing this AEG product. We have created it to give you impeccable performance for many years, with innovative technologies that help make life simpler – features you might not find on ordinary appliances. Please spend a few minutes reading to get the very best from it.

ACCESSORIES AND CONSUMABLES

In the AEG webshop, you'll find everything you need to keep all your AEG appliances looking spotless and working perfectly. Along with a wide range of accessories designed and built to the high quality standards you would expect, from specialist cookware to cutlery baskets, from bottle holders to delicate laundry bags...



Visit the webshop at:
www.aeg.com/shop

CONTENTS

4 Safety information
7 Control panel
11 First use
12 Daily use
15 Helpful hints and tips
16 Care and cleaning
19 What to do if...
21 Technical data
21 Installation
24 Noises
26 Environmental concerns

The following symbols are used in this user manual:

⚠
Important information concerning your personal safety and information on how to avoid damaging the appliance.

ⓘ
General information and tips

Environmental information

Subject to change without notice

SAFETY INFORMATION

In the interest of your safety and to ensure the correct use, before installing and first using the appliance, read this user manual carefully, including its hints and warnings. To avoid unnecessary mistakes and accidents, it is important to ensure that all people using the appliance are thoroughly familiar with its operation and safety features. Save these instructions and make sure that they remain with the appliance if it is moved or sold, so that everyone using it through its life will be properly informed on appliance use and safety.
For the safety of life and property keep the precautions of these user's instructions as the manufacturer is not responsible for damages caused by omission.

Children and vulnerable people safety

- This appliance is not intended for use by persons (including children) with reduced physical, sensory or mental capabilities, or lack of experience and knowledge, unless they have been given supervision or instruction concerning use of the appliance by a person responsible for their safety.

  Children should be supervised to ensure that they do not play with the appliance.
- Keep all packaging well away from children. There is risk of suffocation.
- If you are discarding the appliance pull the plug out of the socket, cut the connection cable (as close to the appliance as you can) and remove the door to prevent playing children to suffer electric shock or to close themselves into it.
- If this appliance featuring magnetic door seals is to replace an older appliance having a spring lock (latch) on the door or lid, be sure to make that spring lock unusable before you discard the old appliance. This will prevent it from becoming a death trap for a child.

General safety

WARNING!

Keep ventilation openings, in the appliance enclosure or in the built-in structure, clear of obstruction.

- The appliance is intended for keeping foodstuff and/or beverages in a normal household as explained in this instruction booklet.
- Do not use a mechanical device or any artificial means to speed up the thawing process.
- Do not use other electrical appliances (such as ice cream makers) inside of refrigerating appliances, unless they are approved for this purpose by the manufacturer.
- Do not damage the refrigerant circuit.
- The refrigerant isobutane (R600a) is contained within the refrigerant circuit of the appliance, a natural gas with a high level of environmental compatibility, which is nevertheless flammable.

  During transportation and installation of the appliance, be certain that none of the components of the refrigerant circuit become damaged.

  If the refrigerant circuit should become damaged:

  – avoid open flames and sources of ignition

- thoroughly ventilate the room in which the appliance is situated

- It is dangerous to alter the specifications or modify this product in any way. Any damage to the cord may cause a short-circuit, fire and/or electric shock.

WARNING!
Any electrical component (power cord, plug, compressor) must be replaced by a certified service agent or qualified service personnel to avoid hazard.

1. Power cord must not be lengthened.
2. Make sure that the power plug is not squashed or damaged by the back of the appliance. A squashed or damaged power plug may overheat and cause a fire.
3. Make sure that you can come to the mains plug of the appliance.
4. Do not pull the mains cable.
5. If the power plug socket is loose, do not insert the power plug. There is a risk of electric shock or fire.
6. You must not operate the appliance without the lamp cover[1)] of interior lighting.

- This appliance is heavy. Care should be taken when moving it.
- Do not remove nor touch items from the freezer compartment if your hands are damp/wet, as this could cause skin abrasions or frost/freezer burns.
- Avoid prolonged exposure of the appliance to direct sunlight.
- Bulb lamps[2)] used in this appliance are special purpose lamps selected for household appliances use only. They are not suitable for household room illumination.

Daily Use

- Do not put hot pot on the plastic parts in the appliance.
- Do not store flammable gas and liquid in the appliance, because they may explode.
- Do not place food products directly against the air outlet on the rear wall.[3)]
- Frozen food must not be re-frozen once it has been thawed out.
- Store pre-packed frozen food in accordance with the frozen food manufacturer's instructions.
- Appliance's manufacturers storage recommendations should be strictly adhered to. Refer to relevant instructions.
- Do not place carbonated or fizzy drinks in the freezer compartment as it creates pressure on the container, which may cause it to explode, resulting in damage to the appliance.
- Ice lollies can cause frost burns if consumed straight from the appliance.

Care and cleaning

- Before maintenance, switch off the appliance and disconnect the mains plug from the mains socket.
- Do not clean the appliance with metal objects.
- Do not use sharp objects to remove frost from the appliance. Use a plastic scraper.

1) If the lamp cover is foreseen.
2) If the lamp is foreseen.
3) If the appliance is Frost Free.

- Regularly examine the drain in the refrigerator for defrosted water. If necessary, clean the drain. If the drain is blocked, water will collect in the bottom of the appliance.

Installation

For electrical connection carefully follow the instructions given in specific paragraphs.

- Unpack the appliance and check if there are damages on it. Do not connect the appliance if it is damaged. Report possible damages immediately to the place you bought it. In that case retain packing.
- It is advisable to wait at least four hours before connecting the appliance to allow the oil to flow back in the compressor.
- Adequate air circulation should be around the appliance, lacking this leads to overheating. To achieve sufficient ventilation follow the instructions relevant to installation.
- Wherever possible the back of the product should be against a wall to avoid touching or catching warm parts (compressor, condenser) to prevent possible burn.
- The appliance must not be located close to radiators or cookers.
- Make sure that the mains plug is accessible after the installation of the appliance.
- Connect to potable water supply only. [4)]

Service

- Any electrical work required to do the servicing of the appliance should be carried out by a qualified electrician or competent person.
- This product must be serviced by an authorized Service Centre, and only genuine spare parts must be used.

Environment Protection

This appliance does not contain gasses which could damage the ozone layer, in either its refrigerant circuit or insulation materials. The appliance shall not be discarded together with the urban refuse and rubbish. The insulation foam contains flammable gases: the appliance shall be disposed according to the applicable regulations to obtain from your local authorities. Avoid damaging the cooling unit, especially at the rear near the heat exchanger. The materials used on this appliance marked by the symbol ♺ are recyclable.

4) If a water connection is foreseen.

CONTROL PANEL

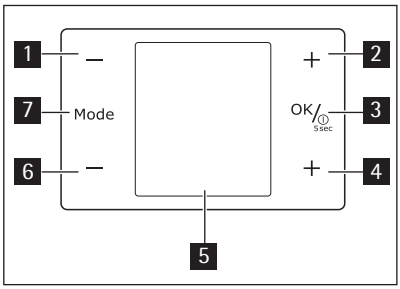

1 Fridge temperature colder button
2 Fridge temperature warmer button
3 ON/OFF button
OK button
4 Freezer temperature warmer button
5 Display
6 Freezer temperature colder button
7 Mode button
It is possible to change predefined sound of buttons to a loudly one by pressing together MODE 7 and MINUS 6 for some seconds. Change is reversible.

Display

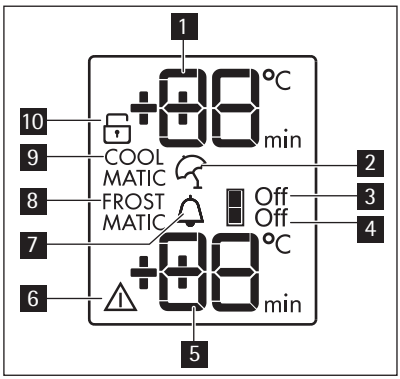

1 Fridge temperature indicator
2 Holiday function
3 Fridge Off
4 Freezer Off
5 Freezer temperature indicator
6 Alarm indicator
7 Drink Chill function

8 FROSTMATIC function
9 COOLMATIC function
10 Child Lock function

Switching on

To switch on the appliance do these steps:

1. Connect the mains plug to the power socket.
2. Press the appliance ON/OFF button if the display is off.
3. The alarm buzzer could operate after few seconds.
   To reset the alarm refer to "High temperature alarm".
4. If "dEMo" appears on the display, the appliance is in demonstration mode. Refer to "What to do if...".
5. The temperature indicators show the set default temperature.

To select a different set temperature refer to "Temperature regulation".

Switching off

To switch off the appliance do these steps:

1. Press the appliance ON/OFF button for 5 seconds.
2. The display switches off.
3. To disconnect the appliance from the power disconnect the mains plug from the power socket.

Switching off the fridge

To switch off the fridge:

1. Press the Mode button until the corresponding icon appears.
   The Fridge Off indicator flashes.
   The fridge indicator shows dashes.
2. Press the OK button to confirm.
3. The fridge Off indicator is shown.

Switching on the fridge

To switch on the fridge:

1. Press the fridge temperature regulator.

Or:

1. Press the Mode button until the corresponding icon appears.
   The Fridge Off indicator flashes.
2. Press the OK button to confirm.
3. The fridge Off indicator goes off.

To select a different set temperature refer to "Temperature regulation".

Temperature regulation

The set temperature of the fridge and of the freezer may be adjusted by pressing the temperature regulators.

Set default temperature:

- +5°C for the fridge
- -18°C for the freezer

The temperature indicators show the set temperature.
The set temperature will be reached within 24 hours.



After a power failure the set temperature remains stored.

Child Lock function

To lock the buttons from unintentional operation select the Child Lock function.
To switch on the function:

1. Press the Mode button until the corresponding icon appears.
2. The Child Lock indicator flashes.
3. Press the OK button to confirm.

   The Child Lock indicator is shown.

To switch off the function:

1. Press the Mode button until the Child Lock indicator flashes.
2. Press the OK button to confirm.
3. The Child Lock indicator goes off.

Holiday function

This function allows you to keep the refrigerator closed and empty during a long holiday period without the formation of a bad smell.



The fridge compartment must be empty with holiday function on.

To switch on the function:

1. Press the Mode button until the corresponding icon appears.

   The Holiday indicator flashes.

   The fridge temperature indicator shows the set temperature.
2. Press the OK button to confirm.

   The Holiday indicator is shown.

To switch off the function:

1. Press the Mode button until the Holiday indicator flashes.
2. Press the OK button to confirm.
3. The Holiday indicator goes off.



The function switches off by selecting a different fridge set temperature.

COOLMATIC function

If you need to insert a large amount of warm food, for example after doing the grocery shopping, we suggest activating the COOLMATIC function to chill the products more rapidly and to avoid warming the other food which is already in the refrigerator.

To switch on the function:

1. Press the Mode button until the corresponding icon appears.
   The COOLMATIC indicator flashes.
2. Press the OK button to confirm.
   The COOLMATIC indicator is shown.

The COOLMATIC function shuts off automatically after approximately 6 hours.
To switch off the function before its automatic end:

1. Press the Mode button until the COOLMATIC indicator flashes.
2. Press the OK button to confirm.
3. The COOLMATIC indicator goes off.



The function switches off by selecting a different fridge set temperature.

Drinks Chill function

The Drinks Chill function is to be used as a safety warning when placing bottles in the freezer compartment.
To switch on the function:

1. Press the Mode button until the corresponding icon appears.
   The Drinks Chill indicator flashes.
   The Timer shows the set value (30 minutes) for a few seconds.
2. Press the Timer regulator button to change the Timer set value from 1 to 90 minutes.
3. Press the OK button to confirm.
   The Drinks Chill indicator is shown.
   The Timer start to flash.

At the end of the countdown the Drinks Chill indicator flashes and an audible alarm sounds:

1. Remove the drinks contained in the freezer compartment.
2. Switch off the function.

To switch off the function:

1. Press the Mode button until the Drinks Chill indicator flashes.
2. Press the OK button to confirm.
3. The Drinks Chill indicator goes off.

It is possible to deactivate the function at any time.

FROSTMATIC function

To switch on the function:

1. Press the Mode button until the corresponding icon appears.
   The FROSTMATIC indicator flashes.
2. Press the OK button to confirm.
   The FROSTMATIC indicator is shown.

This function stops automatically after 52 hours.
To switch off the function before its automatic end:

1. Press the Mode button until the FROSTMATIC indicator flashes.
2. Press the OK button to confirm.
3. The FROSTMATIC indicator goes off.

The function switches off by selecting a different freezer set temperature.

High temperature alarm

An increase in the temperature in the freezer compartment (for example due to an earlier power failure) is indicated by:

- flashing the alarm and freezer temperature indicators
- sounding of buzzer.

To reset the alarm:

1. Press any button.
2. The buzzer switches off.
3. The freezer temperature indicator shows the highest temperature reached for a few seconds. Then show again the set temperature.
4. The alarm indicator continue to flash until the normal conditions are restored.

When the alarm has returned the alarm indicator goes off.

Door open alarm

An acoustic alarm will sound if the door is left open for a few minutes. The door open alarm conditions are indicated by:

- flashing Alarm indicator
- acoustic buzzer

When normal conditions are restored (door closed), the alarm will stop.
During the alarm, the buzzer can be switched off by pressing any button.

FIRST USE

Cleaning the interior

Before using the appliance for the first time, wash the interior and all internal accessories with lukewarm water and some neutral soap so as to remove the typical smell of a brand-new product, then dry thoroughly.

Do not use detergents or abrasive powders, as these will damage the finish.

If “dEMo” appears on the Display, the appliance is in demonstration mode: refer to “WHAT TO DO IF...” paragraph.

DAILY USE

Movable shelves

The walls of the refrigerator are equipped with a series of runners so that the shelves can be positioned as desired.

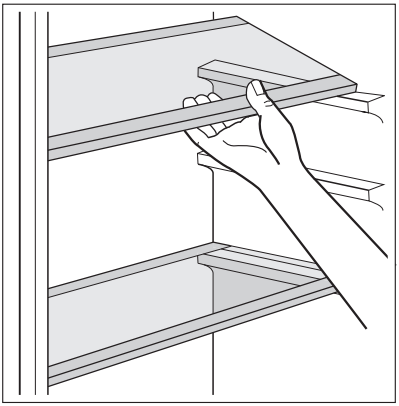

Positioning the door shelves

To permit storage of food packages of various sizes, the door shelves can be placed at different heights.

Bottle rack

Place the bottles (with the opening facing front) in the pre-positioned shelf.

If the shelf is positioned horizontally, place only closed bottles.

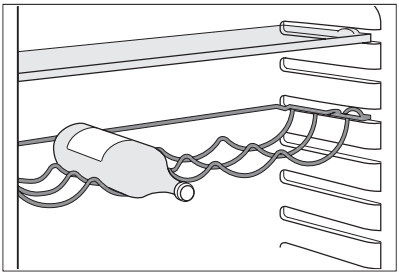

This bottle holder shelf can be tilted in order to store previously opened bottles. To obtain this result, pull the shelf up so it can rotate upwards and be placed on the next higher level.

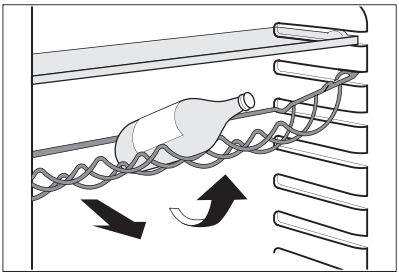

Vegetable drawer with humidity control

The drawer is suitable for storing fruit and vegetables.

There is a separator inside the drawer that can be placed in different positions to allow for the subdivision best suited to personal needs.
There is a grille (if foreseen) on the bottom of the drawer to separate the fruit and vegetables from any humidity that may form on the bottom surface.
All parts inside the drawer can be removed for cleaning purposes

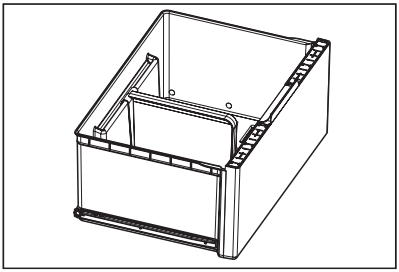

To regulate the humidity in the vegetable drawer the glass shelf incorporates a device with slits (adjustable by means of a sliding lever).
When the ventilation slots are closed:
the natural moisture content of the food in the fruit and vegetable compartments is preserved for longer.
When the ventilation slots are opened:
more air circulation results in a lower air moisture content in the fruit and vegetable compartments.

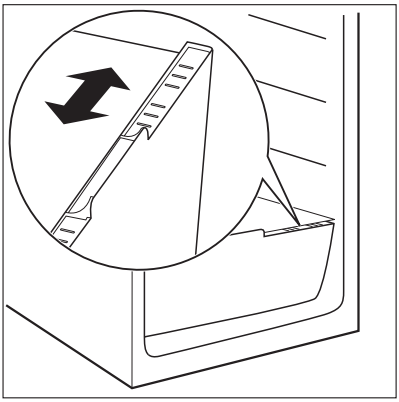

Air cooling

The Dynamic Air Cooling (DAC) fan let food cool quickly and a more uniform temperature in the compartment.
You can switch on the fan by pressing the switch shown in the picture. The green light comes on.

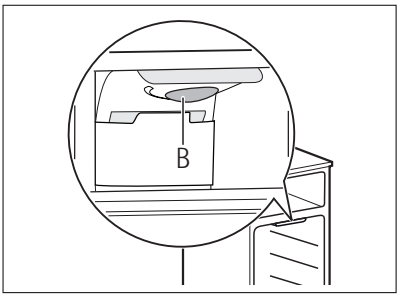

⚠ Switch on the fan when the ambient temperature exceeds 25°C.

Freezing fresh food

The freezer compartment is suitable for freezing fresh food and storing frozen and deep-frozen food for a long time.
To freeze fresh food activate the FROSTMATIC function at least 24 hours before placing the food to be frozen in the freezer compartment.
Place the fresh food to be frozen in the bottom compartment.
The maximum amount of food that can be frozen in 24 hours is specified on the **rating plate**, a label located on the inside of the appliance.

The freezing process lasts 24 hours: during this period do not add other food to be frozen.

Storage of frozen food

When first starting-up or after a period out of use, before putting the products in the compartment let the appliance run at least 2 hours on the higher settings.
If large quantities of food are to be stored, remove all drawers and baskets from appliance and place food on cooling shelves to obtain the best performance.

WARNING!
Make sure that foods do not exceed the load limit stated on the side of the upper section (where applicable)

In the event of accidental defrosting, for example due to a power failure, if the power has been off for longer that the value shown in the technical characteristics chart under "rising time", the defrosted food must be consumed quickly or cooked immediately and then re-frozen (after cooling).

Frozen Food Calendar



The symbols show different types of frozen goods.
The numbers indicate storage times in months for the appropriate types of frozen goods.
Whether the upper or lower value of the indicated storage time is valid depends on the quality of the foods and treating before freezing.

Ice-cube production

This appliance is equipped with one or more trays for the production of ice- cubes.
These are insert on the sides of the upper freezer drawer.
Pull out the upper freezer drawer.
Extract the ice-tray.

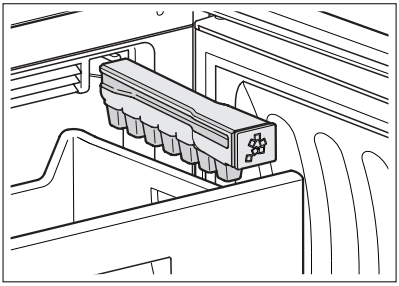

Pull out the tap. Fill with water to the limit indicated "MAX".
Refit the tap and insert the tray in the appropriate place.
To remove the ice cubes rotate the tray with the ice needles towards the top and hit on a rigid surface.
To semplify the release of the ice needles it is recommended to keep the closed tray under if possible luke warm water for a few seconds.

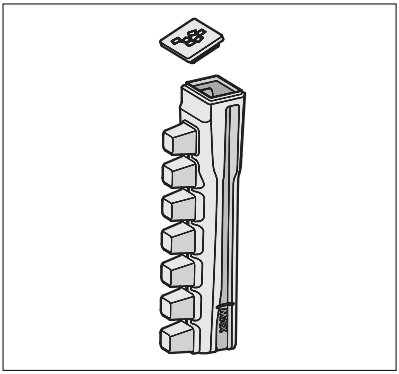

WARNING!
Do not use metallic instruments to remove the trays from the freezer.

Thawing

Deep-frozen or frozen food, prior to being used, can be thawed in the refrigerator compartment or at room temperature, depending on the time available for this operation.
Small pieces may even be cooked still frozen, directly from the freezer: in this case, cooking will take longer.

HELPFUL HINTS AND TIPS

Hints for energy saving

- Do not open the door frequently or leave it open longer than absolutely necessary.
- If the ambient temperature is high and the Temperature Regulator is set to low temperature and the appliance is fully loaded, the compressor may run continuously, causing frost or ice on the evaporator. If this happens, set the Temperature Regulator toward warmer settings to allow automatic defrosting and so a saving in electricity consumption.

Hints for fresh food refrigeration

To obtain the best performance:

- do not store warm food or evaporating liquids in the refrigerator
- do cover or wrap the food, particularly if it has a strong flavour
- position food so that air can circulate freely around it

Hints for refrigeration

Useful hints:
Meat (all types) : wrap in polythene bags and place on the glass shelf above the vegetable drawer.
For safety, store in this way only one or two days at the most.
Cooked foods, cold dishes, etc..: these should be covered and may be placed on any shelf.
Fruit and vegetables: these should be thoroughly cleaned and placed in the special drawer(s) provided.

Butter and cheese: these should be placed in special airtight containers or wrapped in aluminium foil or polythene bags to exclude as much air as possible.
Milk bottles: these should have a cap and should be stored in the bottle rack on the door.
Bananas, potatoes, onions and garlic, if not packed, must not be kept in the refrigerator.

Hints for freezing

To help you make the most of the freezing process, here are some important hints:

- the maximum quantity of food which can be frozen in 24 hrs. is shown on the rating plate;
- the freezing process takes 24 hours. No further food to be frozen should be added during this period;
- only freeze top quality, fresh and thoroughly cleaned, foodstuffs;
- prepare food in small portions to enable it to be rapidly and completely frozen and to make it possible subsequently to thaw only the quantity required;
- wrap up the food in aluminium foil or polythene and make sure that the packages are airtight;
- do not allow fresh, unfrozen food to touch food which is already frozen, thus avoiding a rise in temperature of the latter;
- lean foods store better and longer than fatty ones; salt reduces the storage life of food;
- water ices, if consumed immediately after removal from the freezer compartment, can possibly cause the skin to be freeze burnt;
- it is advisable to show the freezing in date on each individual pack to enable you to keep tab of the storage time.

Hints for storage of frozen food

To obtain the best performance from this appliance, you should:

- make sure that the commercially frozen foodstuffs were adequately stored by the retailer;
- be sure that frozen foodstuffs are transferred from the foodstore to the freezer in the shortest possible time;
- not open the door frequently or leave it open longer than absolutely necessary.
- Once defrosted, food deteriorates rapidly and cannot be refrozen.
- Do not exceed the storage period indicated by the food manufacturer.

CARE AND CLEANING

CAUTION!
Unplug the appliance before carrying out any maintenance operation.

This appliance contains hydrocarbons in its cooling unit; maintenance and recharging must therefore only be carried out by authorized technicians.

Periodic cleaning

The equipment has to be cleaned regularly:

- clean the inside and accessories with lukewarm water and some neutral soap.
- regularly check the door seals and wipe clean to ensure they are clean and free from debris.
- rinse and dry thoroughly.

Do not pull, move or damage any pipes and/or cables inside the cabinet.
Never use detergents, abrasive powders, highly perfumed cleaning products or wax polishes to clean the interior as this will damage the surface and leave a strong odour.

Clean the condenser (black grill) and the compressor at the back of the appliance with a brush. This operation will improve the performance of the appliance and save electricity consumption.

Take care of not to damage the cooling system.

Many proprietary kitchen surface cleaners contain chemicals that can attack/damage the plastics used in this appliance. For this reason it is recommended that the outer casing of this appliance is only cleaned with warm water with a little washing-up liquid added.
After cleaning, reconnect the equipment to the mains supply.

Replacing the Taste Guard filter

The Taste Guard filter helps to reduce the odours inside the fridge limiting the risk of unwanted aroma in sensitive food
To get the best performance the Taste Guard filter should be changed once every year.
New active air filters can be purchased from your local dealer.

- The air filter is placed behind the flap and can be reached by pulling the flap outward (1)
- pull out of the slot the exhausted air filter.

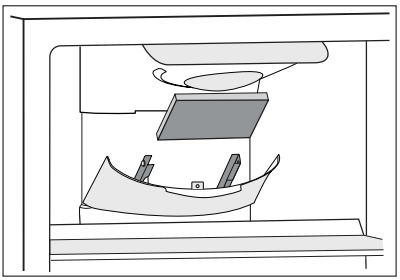

- insert the new air filter in the slot (2)
- close the flap.

The air filter is a consumable accessory and as such is not covered by the guarantee.

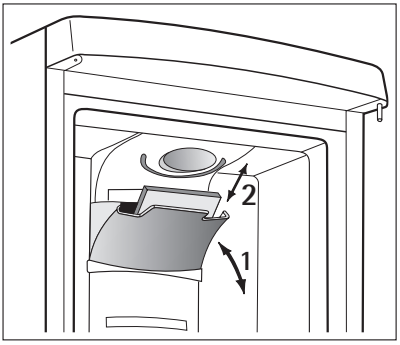

⚠ During the operation, always keep the air ventilation flap closed.
The air filter should be handled carefully to prevent its surface from being scratched.

Defrosting of the refrigerator

Frost is automatically eliminated from the evaporator of the refrigerator compartment every time the motor compressor stops, during normal use. The defrost water drains out through a trough into a special container at the back of the appliance, over the motor compressor, where it evaporates.
It is important to periodically clean the defrost water drain hole in the middle of the refrigerator compartment channel to prevent the water overflowing and dripping onto the food inside. Use the special cleaner provided, which you will find already inserted into the drain hole.

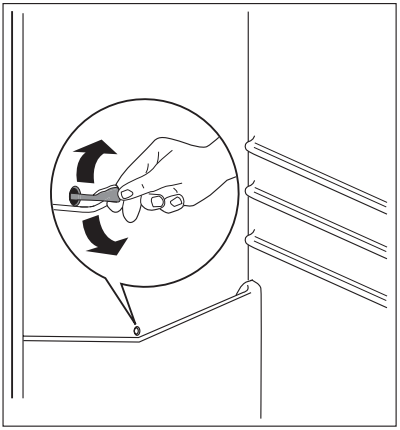

Defrosting of the freezer

The freezer compartment of this model, on the other hand, is a "no frost" type. This means that there is no buildup of frost when it is in operation, neither on the internal walls nor on the foods.
The absence of frost is due to the continuous circulation of cold air inside the compartment, driven by an automatically controlled fan.

Periods of non-operation

When the appliance is not in use for long periods, take the following precautions:

- disconnect the appliance from electricity supply
- remove all food
- defrost[5)] and clean the appliance and all accessories

5) If foreseen.

- leave the door/doors ajar to prevent unpleasant smells.

If the cabinet will be kept on, ask somebody to check it once in a while to prevent the food inside from spoiling in case of a power failure.

WHAT TO DO IF...

WARNING!
Before troubleshooting, disconnect the mains plug from the mains socket.
Only a qualified electrician or competent person must do the troubleshooting that is not in this manual.

Problem	Possible cause	Solution
The appliance does not operate. The lamp does not operate.	The appliance is switched off.	Switch on the appliance.
	The mains plug is not connected to the mains socket correctly.	Connect the mains plug to the mains socket correctly.
	The appliance has no power. There is no voltage in the mains socket.	Connect a different electrical appliance to the mains socket. Contact a qualified electrician.
The lamp does not work.	The lamp is in stand-by.	Close and open the door.
	The lamp is defective.	Refer to "Replacing the lamp".
The compressor operates continually.	The temperature is not set correctly.	Set a higher temperature.
	The door is not closed correctly.	Refer to "Closing the door".
	The door has been opened too frequently.	Do not keep the door open longer than necessary.
	The product temperature is too high.	Let the product temperature decrease to room temperature before storage.
	The room temperature is too high.	Decrease the room temperature.
Water flows on the rear plate of the refrigerator.	During the automatic defrosting process, frost defrosts on the rear plate.	This is correct.
Water flows into the refrigerator.	The water outlet is clogged.	Clean the water outlet.
	Products prevent that water flows into the water collector.	Make sure that products do not touch the rear plate.
Water flows on the ground.	The melting water outlet does not flow in the evaporative tray above the compressor.	Attach the melting water outlet to the evaporative tray.

Problem	Possible cause	Solution
The temperature in the appliance is too low.	The temperature regulator is not set correctly.	Set a higher temperature.
The temperature in the appliance is too high.	The temperature regulator is not set correctly.	Set a lower temperature.
	The door is not closed correctly.	Refer to "Closing the door".
	The product temperature is too high.	Let the product temperature decrease to room temperature before storage.
	Many products are stored at the same time.	Store less products at the same time.
The temperature in the refrigerator is too high.	There is no cold air circulation in the appliance.	Make sure that there is cold air circulation in the appliance.
The temperature in the freezer is too high.	Products are too near to each other.	Store products so that there is cold air circulation.
Technical problems	electrical malfunction	Contact Customer Service Department
Upper or lower square is shown in the temperature Display.	An error has occurred in measuring the temperature	Call your service representative (the cooling system will continue to keep food products cold, but temperature adjustment will not be possible).
dEMo appears on the Display.	The appliance is in demonstration mode (dEMo) .	Keep pressed approximately 10 sec. the OK button since a long sound of buzzer is heard and the Display shut off for a short while: appliance start works regularly.

Replacing the lamp

CAUTION!
Disconnect the plug from the mains socket.

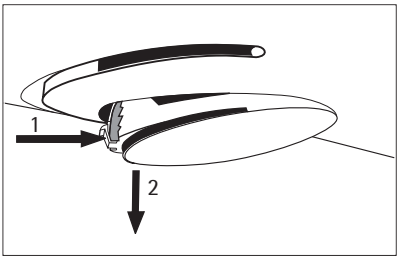

1. Press on the rear hook of the lamp cover by a screwdriver and at the same time pull and rotate the cover in the direction of the arrow.
2. Replace the lamp with one of the same power and specifically designed for household appliances. (the maximum power is shown on the light bulb cover).
3. Install the lamp cover by fixing it into its original position.
4. Connect the plug to the mains socket.
5. Open the door. Make sure that the light comes on.

Closing the door

1. Clean the door gaskets.
2. If necessary, adjust the door. Refer to "Installation".
3. If necessary, replace the defective door gaskets. Contact the Service Center.

TECHNICAL DATA

Dimension of the recess		
	Height	1950 mm
	Width	695 mm
	Depth	696 mm
Rising Time		20 h
Voltage		230-240 V
Frequency		50 Hz

The technical information are situated in the rating plate on the internal left side of the appliance and in the energy label.

INSTALLATION

WARNING!
Read the "Safety Information" carefully for your safety and correct operation of the appliance before installing the appliance.

Positioning

Install this appliance at a location where the ambient temperature corresponds to the climate class indicated on the rating plate of the appliance:

Climate class	Ambient temperature
SN	+10°C to + 32°C
N	+16°C to + 32°C
ST	+16°C to + 38°C
T	+16°C to + 43°C

Location

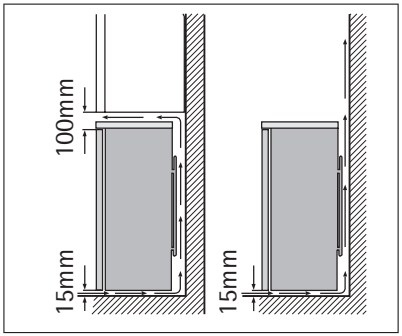

The appliance should be installed well away from sources of heat such as radiators, boilers, direct sunlight etc. Ensure that air can circulate freely around the back of the cabinet.To ensure best performance, if the appliance is positioned below an overhanging wall unit, the minimum distance between the top of the cabinet and the wall unit must be at least 100 mm . Ideally, however, the appliance should not be positioned below overhanging wall units. Accurate levelling is ensured by one or more adjustable feet at the base of the cabinet. If the cabinet is placed in a corner and the side with the hinges facing the wall, the distance between the wall and the cabinet must be at least 10 mm to allow the door to open enough so that the shelves can be removed.

WARNING!
It must be possible to disconnect the appliance from the mains power supply; the plug must therefore be easily accessible after installation.

Electrical Connection

CAUTION!
Any electrical work required to install this appliance should be carried out by a qualified electrician or competent person.

WARNING!
This appliance must be earthed.
The manufacturer declines any liability should these safety measures not be observed.

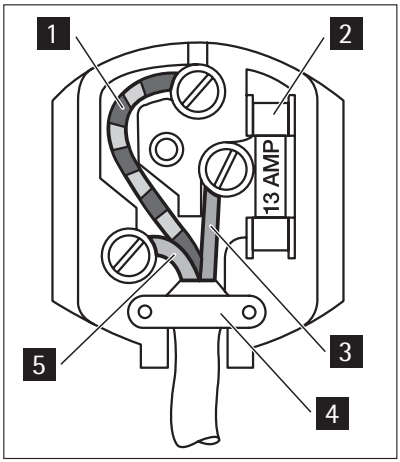

The wires in the mains lead are coloured in accordance with the following code:

1	Green and Yellow:	Earth
3	Brown:	Live
5	Blue:	Neutral

As the colours of the wires in the mains lead of this appliance may not correspond with the coloured markings identifying the terminals in your plug, proceed as follows:

1. Connect the wire coloured green and yellow to the terminal marked either with the letter "E" or by the earth symbol ⏚ or coloured green and yellow.
2. Connect the wire coloured blue to the terminal either marked with the letter "N" or coloured black.
3. Connect the wire coloured brown to the terminal either marked with the "L" or coloured red.
4. Check that no cut, or stray strands of wire is present and the cord clamp 4 is secure over the outer sheath.
5. Make sure the electricity supply voltage is the same as that indicated on the appliance rating plate.
6. Switch on the appliance.

The appliance is supplied with a 13 amp plug fitted 2 . In the event of having to change the fuse in the plug supplied, a 13 amp ASTA approved (BS 1362) fuse must be used.

WARNING!
A cut off plug inserted into a 13 amp socket is a serious safety (shock) hazard. Ensure that it is disposed of safely.

Rear spacers

Inside the appliance you find two spacers which must be fitted as shown in the figure.
Slacken the screws and insert the spacer under the screw head, then retighten the screws.

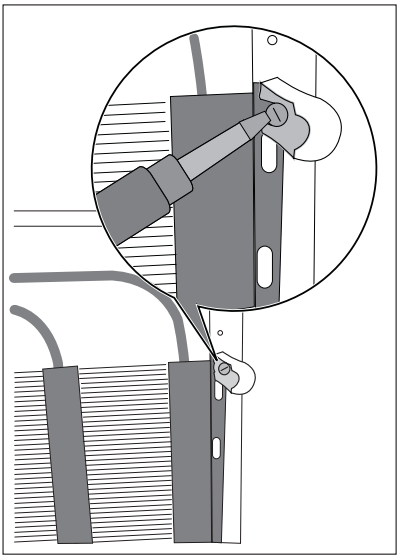

Door reversibility

The door reversibility is not possible.

NOISES

There are some sounds during normal running (compressor, refrigerant circulation).

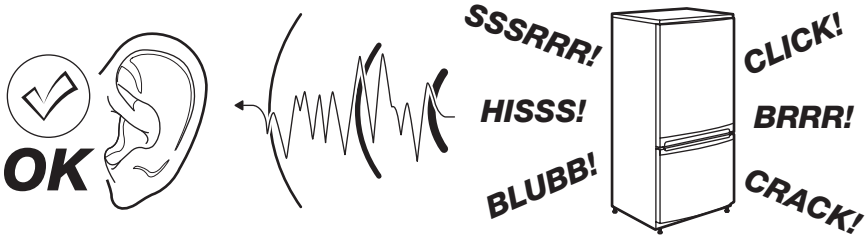



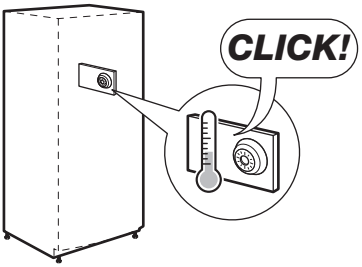



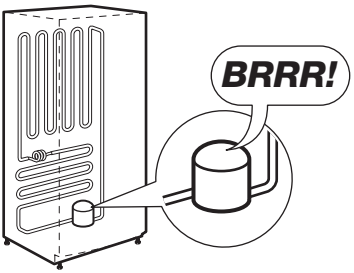

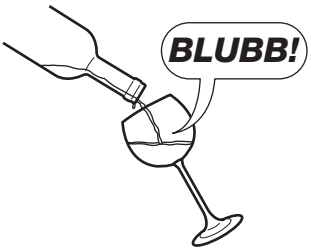
BLUBB!

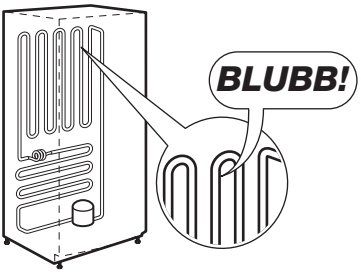
BLUBB!

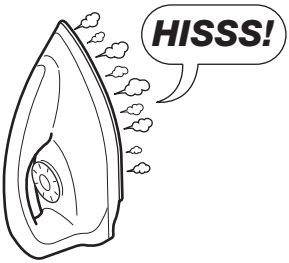
HISSS!

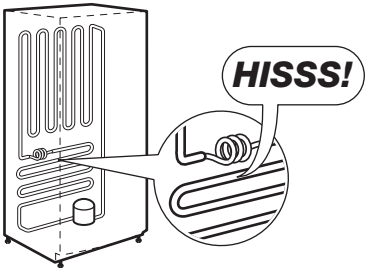
HISSS!

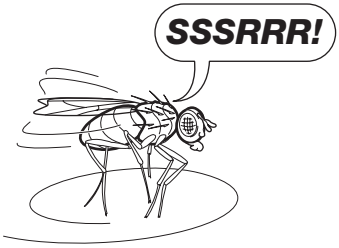
SSSRRR!

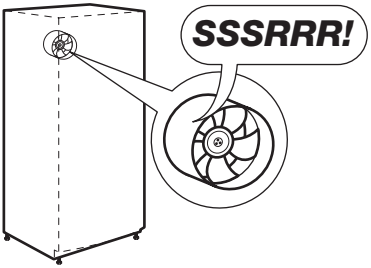
SSSRRR!

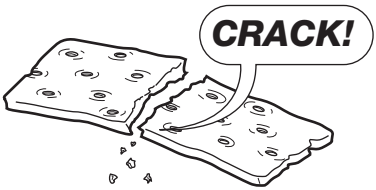
CRACK!

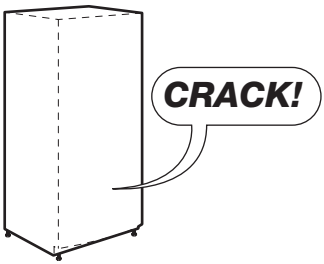
CRACK!

ENVIRONMENTAL CONCERNS

The symbol  on the product or on its packaging indicates that this product may not be treated as household waste. Instead it should be taken to the appropriate collection point for the recycling of electrical and electronic equipment. By ensuring this product is disposed of correctly, you will help prevent potential negative consequences for the environment and human health, which could otherwise be caused by inappropriate waste handling of this product. For more detailed information about recycling of this product, please contact your local council, your household waste disposal service or the shop where you purchased the product.

www.aeg.com/shop



222345017-A-112011

CE