SVR Series Compressor Refrigerator
Installation and Operating Manual



1

SVR50L

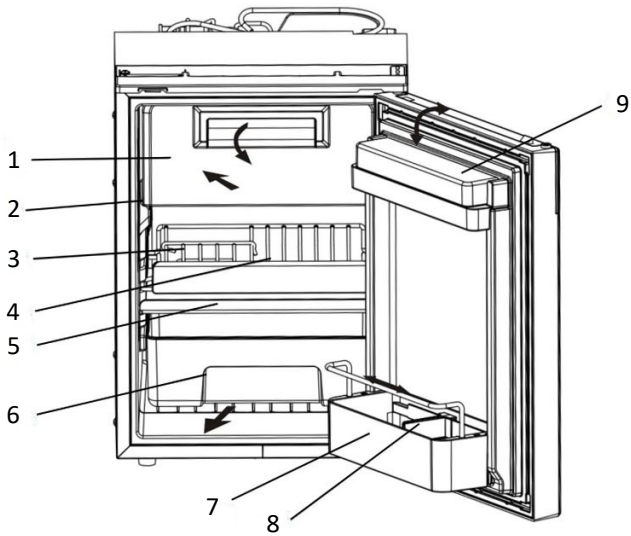

2

SVR85L

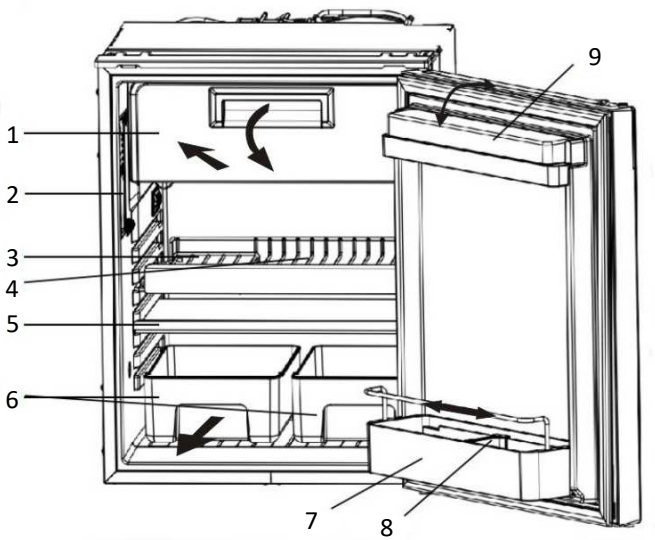

3

SVR50L,SVR85L

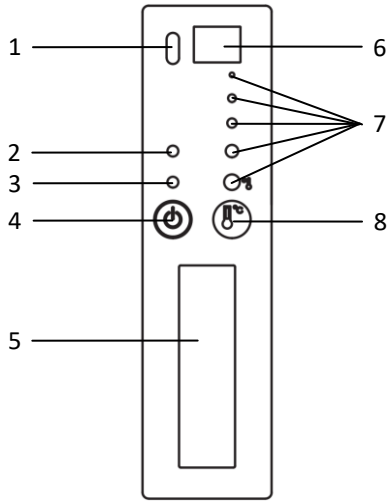

4

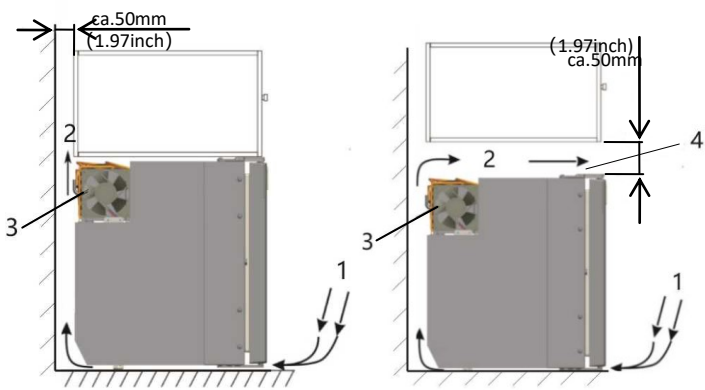

5

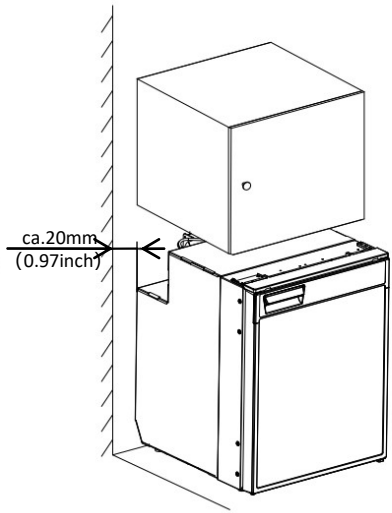

6

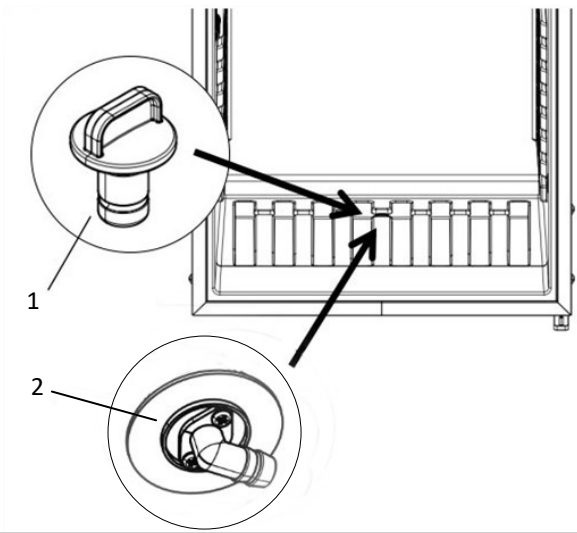

7

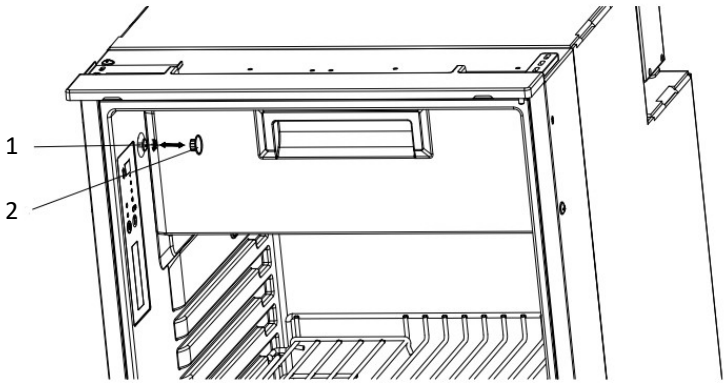

8

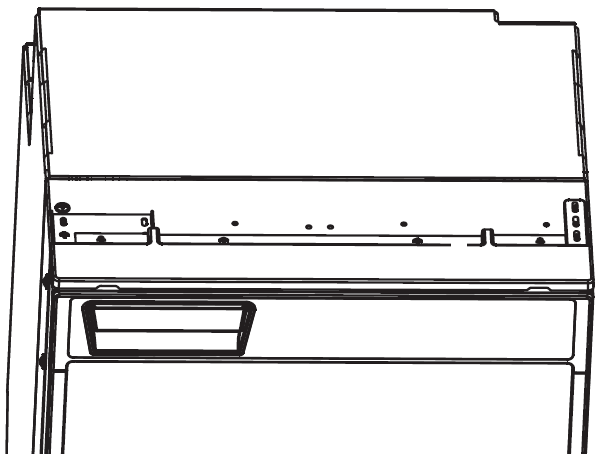

9

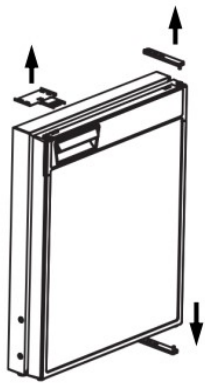

10

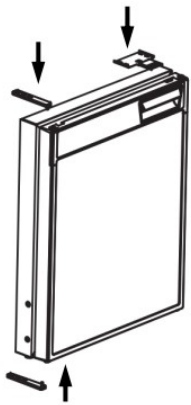

11

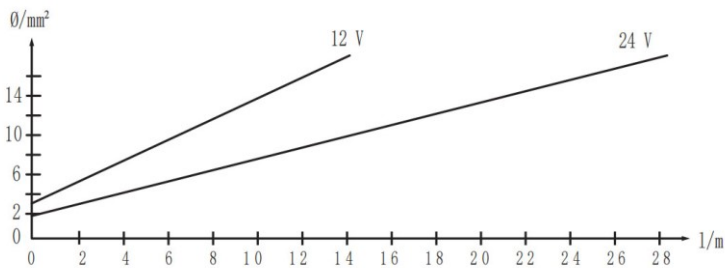

12

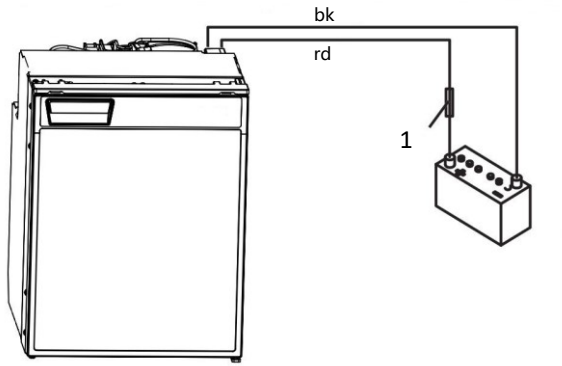

13

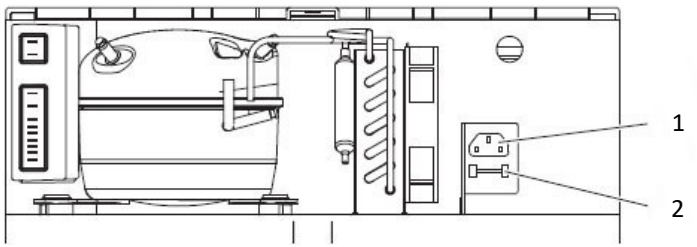

14

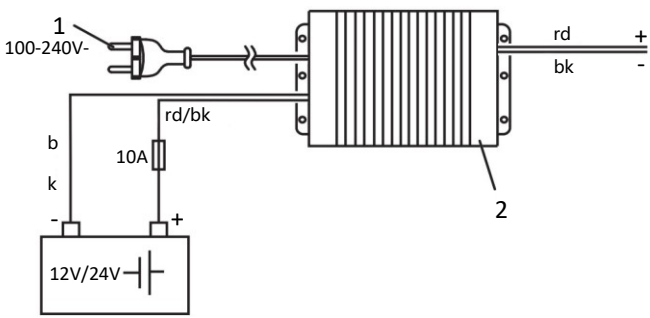

15 **SVR50L**

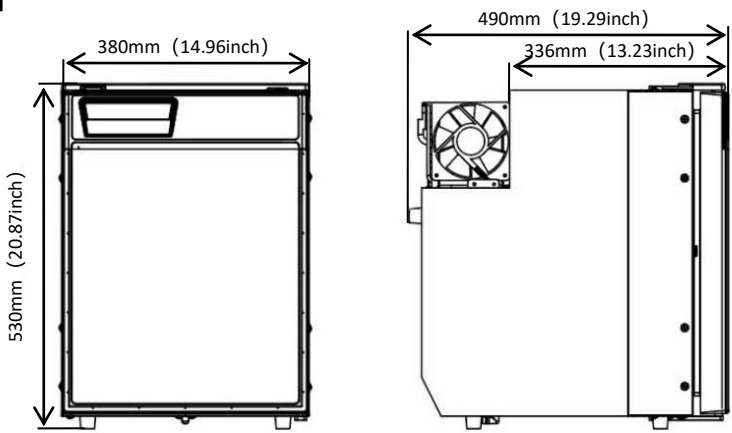

16 **SVR85L**

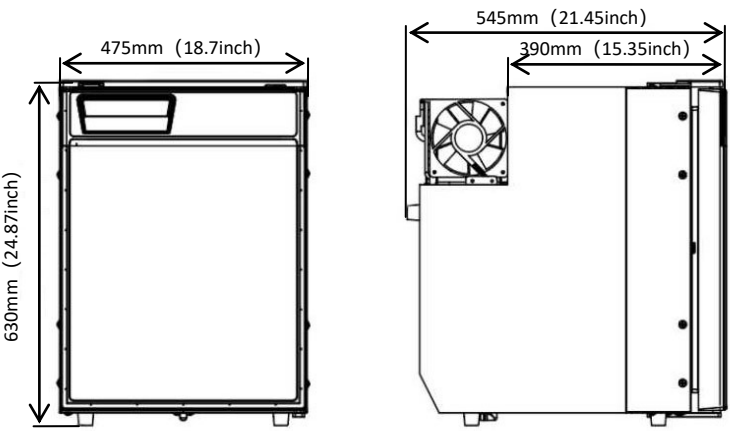

Respected Users:

Thank you for choosing 3J refrigerator!

Please read this instruction manual carefully before installation and first use, and store it in a safe place. If you pass on the product to another person, hand over this instruction manual along with it.

Table of contents

1.Explanation of symbols 10

2.Safety instruction 10

2.1 General safety 11

2.2 Operating the device safely 14

3.Scope of delivery 15

4.Accessories 15

5.Intended use 16

6.Technical description 17

6.1 Control elements inside the refrigerator 17

6.2 Control Panels 18

7.Installing and connecting the refrigerator 18

7.1 Safety instructions for installation on boats 18

7.2 Notes on installing the refrigerator 19

7.3 Mounting the water drain outlet (optional) 21

7.4 Installing the refrigerator 21

7.5 Changing the door hinge 22

7.6 Connecting the refrigerator to DC voltage 22

7.7 Connecting the refrigerator to AC voltage 23
8.Using the refrigerator.....24
8.1 Energy saving tips 26
8.2 Switching on the refrigerator.....26
8.3 Setting the temperature 27
8.4 Conserving foodstuffs.....27
8.5 Defrosting the freezer 28
8.6 Switching off and storing the refrigerator.....29
8.7 Change the fuse(SVR50LACDC, SVR85LACDC only).....29
9.Cleaning and maintenance 29
10.Disposal.....30
11.Troubleshooting.....31
12.Technical data 35

1.Explanation of symbols



DANGER!

Safety instruction: Failure to observe this instruction will cause death or serious injury.



WARNING!

Safety instruction: Failure to observe this instruction can cause death or serious injury.



CAUTION!

Safety instruction: Failure to observe this instruction can lead to injury.



NOTICE!

Failure to observe this instruction can cause material damage and impair the function of the product.



NOTE !

Supplementary information for operating the product.

2.Safety instruction

The manufacturer accepts no liability for damage in the following cases:

- Faulty assembly or connection.
- Damage to the product resulting from mechanical influences and

incorrect connection voltage.

- Alterations to the product without express permission from the manufacturer.
- Use for purposes other than those described in the operating manual.

2.1 General safety



DANGER!

Failure to obey these warnings will result in death or serious injury.

DANGER OF ELECTROCUTION

On boats: If the device is powered by the mains, ensure that the power supply has a residual current circuit breaker.



WARNING!

Failure to obey these warnings could result in death or serious injury.

DANGER OF ELECTROCUTION

- Installations in washrooms and areas exposed to water, must be performed by a qualified technician.
- Do not operate the device if it is visibly damaged.
- If this device's power cable is damaged, it must be replaced by the manufacturer, customer service or a similarly qualified person in order to prevent safety hazards.

- This device may only be repaired by qualified personnel. Inadequate repairs may cause serious hazards.

HEALTH HAZARD

- This appliance can be used by children aged from 8 years and above and persons with reduced Physical, sensory or mental capabilities or lack of experience and knowledge if they have been given supervision or instruction concerning use of the appliance in a safe way and understand the hazards involved. Children shall not play with the appliance. Cleaning and user maintenance shall not be made by children without supervision.

EXPLOSION HAZARD

- Do not store any explosive substances such as spray cans with a flammable propellant in the cooling device.



CAUTION!

- Failure to obey these cautions could result in minor or moderate injury.

HEALTH HAZARD

- Food may only be stored in its original packaging or in suitable containers.

DANGER OF CRUSHING

- Do not put your fingers into the hinge.



NOTICE!DANGER OF DAMAGE

- Check that the voltage specification on the type plate is the same as that of the power supply.
- Never pull the plug out of the socket by the connection cable.
- If the refrigerator is connected to the DC socket: Disconnect the refrigerator and other electric consumers from the battery before connecting the quick charging device.
- If the refrigerator is connected to the DC socket: Disconnect the refrigerator or switch it off when you turn off the engine. Otherwise you may discharge the battery.
- The refrigerator is not suitable for storing substances which are caustic or contain solvents.
- Keep the drainage outlet clean at all times.
- Do not open the refrigerant circuit under any circumstances.
- Never transport the device in a horizontal position, so that no oil can leak out of the compressor.
- Make sure that the refrigerator circuit is not damaged during transportation. The refrigerant in the refrigerator circuit is highly flammable.
- In the event of any damage to the refrigerator circuit:
  - Avoid naked flames and sparks.
  - Air the room well.

- Set up the device in a dry location where it is protected against splashing water.

2.2 Operating the device safely



DANGER!

Failure to obey these warnings will result in death or serious injury.

DANGER OF ELECTROCUTION

- Do not touch exposed cables with your bare hands. This applies especially when operating the device from the AC mains.



CAUTION!

Failure to obey these cautions could result in minor or moderate injury.

DANGER OF ELECTROCUTION

- Before starting the cooling device, ensure that the power supply line and the plug are dry.

HEALTH HAZARD

- If you connect the device to a battery, make sure that no food comes into contact with the battery acid.



NOTICE!DANGER OF DAMAGE

- Do not use electrical devices inside the cooling device unless they are recommended by the manufacturer for that purpose.

- Do not place it near naked flames or other heat sources (heaters, direct sunlight, gas ovens etc.)

DANGER OF OVERHEATING

- Always ensure sufficient ventilation so that the heat generated during operation can dissipate. Make sure that the device is sufficiently far away from walls and other objects so that the air can circulate.
- Ensure that the ventilation vents are not covered.
- Do not fill the inner container with ice or fluid.
- Never immerse the appliance in water.
- Protect the appliance and the cable against heat and moisture.
- Make sure that foodstuffs do not touch the walls of the cooling area.

3.Scope of delivery

Quantity	Description
1	Refrigerator with shelves
1	Water drain outlet
1	Installation and operating manual

4.Accessories

Available as accessories (not included in the scope of delivery):

Description	Explanation	Ref. no.
AC/DC Adapter	Suitable for SVR50LDC,SVR85LDC Transforms an input voltage of AC 100 – 240 V~ to DC 12 V⎓ or 24 V⎓ ,so that the refrigerator can be connected to an AC power supply	
Mounting Frames	Flush mount and standard mounting frames are available for all SVR models	Various

If you have any questions, please contact the dealer or your service partner directly.

5.Intended use

The refrigerator is designed for installation in caravans and motor homes and on boats. It is recommended the unit is installed into a fixed position. Once it is installed, only the front of the appliance may be accessible.

The refrigerator is only suitable for cooling, freezing and storing foodstuffs. The refrigerator is not intended for the proper storage of medicine.



CAUTION!HEALTH HAZARD

Please check if the cooling capacity of the refrigerator is suitable for storing the food you wish to cool.

6.Technical description

The SANJO SVR series cooling appliance can cool products and keep them cool. Products can be deep-frozen in the freezer compartment. All materials used in the refrigerator are compatible for use with foodstuffs. The refrigerant circuit is maintenance free.
The cooling device can withstand a short term inclination of 30°, for example on boats. The temperature is set using the control panel on the inside left of the refrigerator.

SVR50L,SVR85L

Five temperature ranges from 0℃~+10 ℃（50℉） can be selected. The temperature of the refrigerator in low temperature mode can reach-6℃。

6.1 Control elements inside the refrigerator

The various types of refrigerators are shown in the following illustrations:

- SVR50L:**fig.1**, page 1
- SVR85L:**fig.2**, page 1

No.	Explanation
1	Freezer compartment
2	Control panel
3	Small Wire shelf
4	Big Wire shelf
5	Shelf

6	Fruit bowl
7	Storage Box
8	Bottle damper(to hold bottles in the door)
9	Compartment with lid (hinged)

6.2 Control Panels

No. In fig. 3, page2	**Explanation**
1	IR sensor for switching the interior light
2	LED Blue:Compressor is running
	LED Orange: Compressor is off
3	LED Service display
4	On/Off button
5	Inner lighting
6	Temperature selection button
7	LED:Temperature levels

7.Installing and connecting the refrigerator

7.1 Safety instructions for installation on boats

Please note the following instructions for installation on boats:



DANGER! DANGER OF ELECTROCUTION

- If the appliance is powered by the mains, ensure that the voltage supply has a residual current circuit breaker.



NOTICE! DANGER OF DAMAGE

- The cooling device can withstand a short term inclination of 30°, for example on boats. When setting up the refrigerator, note that it must be fastened to take account of this. If you have any questions regarding installation, consult your specialist dealer.
- Install the refrigerator so that the warm air produced can easily flow away (either upwards or to the sides, **fig.5**, Page 3).
- The appliance is designed for ambient temperatures between +16° C (61° F) and +43° C (109° F).

7.2 Notes on installing the refrigerator

Observe the following when installing the refrigerator:

- Install the refrigerator so that the warm air produced can easily flow away (either upwards or to the sides, **fig.4**, Page 2 to **fig.5**, Page 3).

Key for **fig.4**, Page 2 to **fig.5**, Page 3

No.	Explanation
1	Cold intake air
2	Hot waste air
3	Condenser
4	Spacing above the refrigerator if there is not sufficient air to circulate above or at the side.

Product size：

Model	Dimensions W*H*D(mm)	Dimensions W*H*D(inch)
SVR50L	380*530*490	14.96*20.86*19.29
SVR85L	475*630*545	18.70*24.80*21.45

Observe the following installation dimensions:

Model	Dimensions W*H*D(mm)	Dimensions W*H*D(inch)
SVR50L	390*540*540	15.35*21.25*21.25
SVR85L	485*640*595	19.08*25.19*23.42

- Keep objects clear of openings in the housing or installation structure (such as ventilation slots, etc.).
- Condensate is produced when the refrigerator is operating normally. You can either wipe up the condensate on the floor of the refrigerator in regular intervals, or drain it through a water drain outlet in the floor of the refrigerator (see chapter “Mounting the

water drain outlet (optional)” on page 21).

7.3 Mounting the water drain outlet (optional)

- Connect a hose with an inside diameter of 10 mm (0.4 inch) (not included) to the water drain outlet.
- Lay the refrigerator on its side in order to access the bottom side.
- Mount the water drain outlet (**fig.6 2**, Page 3) aligned to the front or to the back according to the desired direction.
- Remove the water drain plug (**fig.6 1**, Page 3) inside the refrigerator.

7.4 Installing the refrigerator

Proceed as follows to install the refrigerator:

- If you wish to drain the condensate through a hose:
  Mount the water drain port (see chapter“Mounting the water drain outlet (optional)”on Page 21).
- Open the refrigerator door.
- Remove the blanking plugs (**fig.7**, Page 4).
- Push the refrigerator into the recess.
- Fix the refrigerator in place using suitable screws (**fig.7**, Page 4).
- Press the blanking plugs (**fig.7**, Page 4) into the openings.

7.5 Changing the door hinge

You can also change the hinge and lock assembly of the door, so that it opens to the right rather than the left.

➢ Proceed as shown (**fig.8**, Page 4 to **fig.10**, Page 5).

7.6 Connecting the refrigerator to DC voltage



NOTICE! DANGER OF DAMAGE

- To avoid voltage drops and loss of performance, keep the connection cable as short as possible and not be interrupted.Therefore avoid additional switches, plugs, power strips or Power bar.
- Disconnect the cooling device and other electric consumers from the battery before you connect the battery to a quick charging device. Over voltage can damage the electronics of the device.

The refrigerator can be operated with 12 or 24 VDC voltage supply.

For safety reasons, the refrigerator is equipped with an electronic system to prevent the polarity being reversed. This protects the refrigerator against reversed polarity when connecting to a battery and against short circuiting.

To protect the battery, the refrigerator switches off automatically if the voltage is insufficient (see table below).

	12V	24V
Cut-off voltage	10.4V	22.8V
Cut-in voltage	11.7V	24.2V

Determine the required cross section of the cable in relation to the cable length according to **fig.11**, Page 5.

Coordinate axis	Meaning	Unit
L	Cable length	m
ϕ	Cable cross section	mm^2



NOTICE! DANGER OF DAMAGE

Make sure the polarity is correct.

- Before starting up the device for the first time, check whether the operating voltage and the battery voltage match (see type plate).
- Connect your refrigerator to a plug socket which is fuse protected at 15 A (at 12 V) or 7.5 A (at 24 V) (**fig.12 1**, Page 6).
- Connect the red cable (**fig.12**, Page 6) to the positive terminal of the battery.
- Connect the black cable (**fig.12**, Page 6) to the negative terminal of the battery.

7.7 Connecting the refrigerator to AC voltage



DANGER! DANGER OF ELECTROCUTION

- Never handle plugs and switches with wet hands or if

you are standing on a wet surface.

- If you are operating your refrigerator on board a boat with an AC mains connection using a shore connection, you must install a residual current circuit breaker between the AC mains supply and the refrigerator.
  Seek advice from a trained technician.

SVR50LACDC, SVR85LACDC

Proceed as follows when you connect the refrigerator to the AC supply:

- Plug the connector into the AC socket (**fig.13 1**, Page 6).

SVR50LDC, SVR85LDC

You can connect the refrigerator to 100-240V AC power if you use the rectifier (**accessory**).

Proceed as follows when you connect the refrigerator to the AC supply:

- Attach the rectifier on the back of the refrigerator.
- Connect the rectifier as shown in (**fig.14**, Page 6).
- Connect the refrigerator to the rectifier(**fig.14 2**, Page 6):
  - Red cable (rd): positive battery terminal.
  - Black cable (bk): negative battery terminal.
- Plug the connector (**fig.14 1**, Page 6) into the AC socket.

8.Using the refrigerator

The refrigerator conserves fresh foodstuffs. The freezer compartment conserves frozen foodstuffs and freezes fresh foodstuffs.



NOTICE! DANGER OF DAMAGE

- Do not place any electrical devices inside the cooler. The only exceptions are devices approved for the purpose by the manufacturer.
- Ensure that food or liquids in glass containers are not excessively refrigerated. Liquids expand when they freeze and can therefore destroy glass containers.
- Food may only be stored in its original packaging or in suitable containers.
- Make sure that you only put items in the cooler which may be kept at the selected temperature.



NOTE!

- Before starting your new refrigerator for the first time, you should clean it inside and outside with a damp cloth for hygienic reasons (please also refer to the chapter “Cleaning and maintenance” on Page 29).
- Do not use force to press the flap of the freezer.
- Do not pull out the dividing wall if there is ice in the freezer.
- Do not remove the control panel membrane when operating the refrigerator.

8.1 Energy saving tips

- Choose a well ventilated location which is protected from direct sunlight.
- Allow hot food to cool down first before you put it in the refrigerator.
- Do not open the refrigerator more often than necessary. If the door is left open for more than 5 minutes, the light starts to flash.
- Do not leave the door open for longer than necessary.
- Defrost your refrigerator as soon as a layer of ice forms.
- Avoid unnecessarily low temperature settings.
- Clean dust and dirt from the condenser at regular intervals.

8.2 Switching on the refrigerator

➢ Switch the refrigerator on by pressing the ⏻ button.



NOTE!

After switching on, the refrigerator needs some time before the compressor starts up.

➢ **Turn on the quite mode:** Press and hold the on/off button and the temperature selection button simultaneously, then the orange light flashes three times to turn on the quite mode.

➢ **Turn off the silent mode:** Press and hold the on/off button and the temperature selection button simultaneously, then the blue light flashes three times to turn off the quite mode.

8.3 Setting the temperature

➢ Press the button repeatedly until the desired temperature level is set. The lower/largest LED is the coldest setting. The upper/ smallest LED is the warmest setting. To switch from the coldest level 5 to the warmest level 1 press the button again.



NOTE!

The cooling performance can be affected by:

- The ambient temperature.
- The amount of food to be conserved.
- The frequency with which the door is opened.

If the ambient temperature is at 16° C (61° F) to 20° C (68° F), set the refrigerator to at least level 2.

8.4 Conserving foodstuffs



NOTICE! DANGER OF DAMAGE

- Do not conserve warm foodstuffs in the refrigerator.
- Do not place glass containers containing liquid in the freezer compartment.



NOTE!

Food which can easily absorb tastes and odours, as well as liquids and products with a high alcohol content, should be conserved in airtight containers.

You can conserve foodstuffs in the refrigerator. The time for which the food can be conserved in this way is usually stated on the package. The refrigerator is divided in different zones with different temperatures:

- The colder zones are immediately above the drawers for fruit and vegetables, near the back wall.
- Observe the temperature information and best before date on the food packaging.
- Observe the following when using the refrigerator:
  - Never re-freeze products which have started defrosting or have been defrosted; consume them as soon as possible.
  - Wrap food in aluminium foil or cling film and shut in a suitable box with a lid.

This ensures that aromas, the shape and the freshness will be better conserved.

8.5 Defrosting the freezer



NOTICE! DANGER OF DAMAGE

Never use mechanical tools to remove ice or to loosen objects stuck to the device. The only exceptions are devices approved for the purpose by the manufacturer.

This is how to defrost the refrigerator:

➢ Empty the contents.

➢ If necessary, put them in another cooling device to keep them

chilled.

- Press the ⏻ button until the refrigerator switches off.
- Close the door properly.

8.6 Switching off and storing the refrigerator

If you do not intend to use the refrigerator for a long time, proceed as follows:

- Press the ⏻ button until the refrigerator switches off.
- Disconnect power.
- Clean the refrigerator (see chapter“Cleaning and maintenance”on page 29).
- The door stays open thus preventing smells from arising.

8.7 Change the fuse(SVR50LACDC, SVR85L ACDC only)

If the fuse in the AC socket is faulty, it can be replaced.

- Lever the fuse compartment (**fig.13 2**, Page 6) open with a screwdriver.
- Replace the fuse (250 V/4 A).
- Close the fuse compartment again.

9.Cleaning and maintenance



NOTICE!DANGER OF DAMAGE

- Do not use abrasive cleaning agents or hard objects during cleaning as these can damage the refrigerator.
- Do not use hard or pointed tools to speed up the defrosting process.

- Always disconnect the device from the power supply before you clean and service it.
- Clean the refrigerator regularly and as soon as it becomes dirty with a damp cloth.
- Make sure that no water drips into the seals. This can damage the electronics.
- Wipe the refrigerator dry with a cloth after cleaning.
- Clean dust and dirt from the condenser at regular intervals.

10.Disposal



WARNING!CHILDREN BEWARE

Before disposing of your old refrigerator:

- Take off the doors.
- Leave storage surfaces in the refrigerator so that children cannot climb inside.

- Place the packaging material in the appropriate recycling waste bins wherever possible.

If you want to get rid of these products eventually, consult your local

recycling center or ask a professional dealer for details.

11.Troubleshooting

The significance of the red LED

For operational faults it illuminates several times. The number of pulses depends on the type of fault.

Each flash lasts for one quarter of a second. After the series of impulses a pause follows. The sequence for the fault is repeated every four seconds.

SVR50L，SVR85L

Number of flashes	Fault	Possible cause
1	Low Voltage	The supply voltage is outside of the set range.
2	Excessive fan current	The fan load on the electronics unit is more than 1 A.
3	The motor doesn't start	The rotor is jammed. The pressure difference in the cooling system is too high (> 5 bar).
4	Speed too low	If the cooling system is overloaded, the minimum speed of the motor of 1,850 rpm cannot be maintained.

5	Overheating of the electronics unit	If the cooling system is loaded too heavily or the temperature is set too high, the electronics can overheat.
Constantly	Temperature sensor errors	Temperature sensor is defective.

Compressor does not run (battery connection)

Problem	Possible cause	Remedy
U_{KL} = 0 V	There is an interruption in the battery electronics connection	Establish a connection
	Main switch faulty (if installed)	Replace the main switch
	Additional supply line fuse has blown (if installed)	Replace the supply line fuse
$U_{Term} \leqslant U_{ON}$	Battery voltage is too low	Charge the battery
Start attempt with $U_{Term} \leqslant U_{OFF}$	Loose cables Poor contact (corrosion)	Establish a connection
	Battery capacity too low	Replacing the battery
	Cable cross section too small	Replace the cable (**fig.11**, Page 5)
Start attempt with	Ambient temperature	–

$U_{Term} \geqslant U_{ON}$	too high	
	Insufficient ventilation	Move the refrigerator to another location
	Condenser is dirty	Clean the condenser
Electric circuit between the pins in the compressor interrupted	Defective compressor	Contact customer service

U_{Term}: Voltage between the positive and negative terminals of the electronics

U_{ON}: Cut-in voltage of the electronics

U_{OFF}: Cut-off voltage of the electronic

Compressor is not running (connected to AC supply)

Problem	**Possible cause**	**Remedy**
No voltage	Connection supply line interrupted	Establish a connection
	Main switch faulty (if installed)	Replace the main switch
	Additional supply line fuse has blown (if installed)	Replace the supply line fuse
Voltage is present but the compressor doesn't run	Ambient temperature too high	–
	Insufficient ventilation	Move the refrigerator to another location

	Condenser is dirty	Clean the condenser
Electric circuit between the pins in the compressor interrupted	Defective compressor	Contact customer service

Poor cooling, increase in interior temperature

Problem	Possible cause	Remedy
Compressor runs for a long time/ continuously	Ambient temperature too high	–
	Insufficient ventilation	Move the refrigerator to another location
	Condenser is dirty	Clean the condenser
	Faulty fan	Replace the fan
Compressor does not run often	Battery capacity exhausted	Charge the battery

Unusual noises

Problem	Possible cause	Remedy
Loud humming	A component of the refrigerant circuit cannot move freely (touching the wall)	Bend the component carefully away from the obstruction
	There is a foreign object stuck between the cooling	Remove the foreign object

	unit and the wall	
	Fan noise	Replace the fan

12.Technical data

	SVR50L	SVR85L
AC/DC Model : DC Model :	SVR50LACDC SVR50LDC	SVR85LACDC SVR85LDC
Refrigerator compartment storage volume:	42L (1.48cu.ft)	72L (2.54cu.ft)
Freezer compartment storage volume:	4.5L (0.15cu.ft)	8L (0.28cu.ft)
Total storage volume:	46.5L (1.64cu.ft)	80L (2.82cu.ft)
Voltage:	DC12/24V AC100-240V（ACDC models only）	
Power consumption :	40W	48W

Rated current		
12V：	5.0A	5.6A
24V：	2.6A	2.8A
100V~(ACDC models only):	1.1A	1.22A
240V~(ACDC models only):	0.54A	0.6A

Cooling temperature range Refrigerator: Freezer:	0℃~+10℃（50℉）/-6℃（21.2℉） -18℃(-0.4℉)	
Climatic class:	N or T	
Relative humidity:	maximum 90%	
Short-term inclination:	maximum 30°	
Max. pressure:	LP 11bar/HP 25 bar	
Propellant:	C5H10	
Refrigerant:	Reference rating label	
Refrigerant quantity:	Reference rating label	
Dimensions（W*H*D）:	**fig.15**, Page 7	**fig.16**, Page 7
Weight:	16.8kg （37.04lbs）	21kg （46.29lbs）
Inspection /certification:		

FREUCAMP

JoniqGmbH
Address：HeerdterLandstraße189F,Düsseldorf,
eutschland
P. C：40549
Q. TEL：4008398111