

Fridge-freezer

en Instruction for Use

K165.. / K166.. / K167..

NEFF

en Table of Contents

Safety and warning information 3
Information concerning disposal 5
Scope of delivery 6
Installation location 6
Room temperature, ventilation and cavity depth 7
Connecting the appliance 7
Getting to know your appliance 8
Switching the appliance on 9
Setting the temperature 9
Usable capacity 10
Refrigerator compartment 10
Freezer compartment 11
Max. freezing capacity 11
Purchasing frozen food 11
Freezing fresh food 11
Super freezing 12
Thawing frozen food 13
Interior fittings 13
Sticker “OK” 13
Switching off and disconnecting the appliance 14
Defrosting 14
Cleaning the appliance 15
Tips for saving energy 16
Operating noises 16
Eliminating minor faults yourself 17
Customer service 18

Safety and warning information

Before you switch ON the appliance

Please read the operating and installation instructions carefully! They contain important information on how to install, use and maintain the appliance.

The manufacturer is not liable if you fail to comply with the instructions and warnings. Retain all documents for subsequent use or for the next owner.

Technical safety

The appliance contains a small quantity of environmentally friendly but flammable refrigerant R600a. Ensure that the tubing of the refrigerant circuit is not damaged during transportation and installation. Leaking refrigerant may cause eye injuries or ignite.

If damage has occurred

- Keep naked flames and/or ignition sources away from the appliance,
- thoroughly ventilate the room for several minutes,
- switch off the appliance and pull out the mains plug,
- inform customer service.

The more refrigerant an appliance contains, the larger the room must be in which the appliance is situated. Leaking refrigerant can form a flammable gas-air mixture in rooms which are too small. The room must be at least 1 m^3 per 8 g of refrigerant. The amount of refrigerant in your appliance is indicated on the rating plate inside the appliance.

If the power cord of this appliance is damaged, it must be replaced by the manufacturer, customer service or a similarly qualified person. Improper installations and repairs may put the user at considerable risk.

Repairs may be performed by the manufacturer, customer service or a similarly qualified person only.

Only original parts supplied by the manufacturer may be used. The manufacturer guarantees that only these parts satisfy the safety requirements.

A extension cable may be purchased from customer service only.

Important information when using the appliance

- Never use electrical appliances inside the appliance (e.g. heater, electric ice maker, etc.). Explosion hazard!
- Never defrost or clean the appliance with a steam cleaner! The steam may penetrate electrical parts and cause a short-circuit. Risk of electric shock!
- Do not use pointed or sharp-edged implements to remove frost or layers of ice. You could damage the refrigerant tubes. Leaking refrigerant may cause eye injuries or ignite.
- Do not store products which contain flammable propellants (e.g. spray cans) or explosive substances in the appliance. Explosion hazard!
- Do not stand on or lean heavily against base of appliance, drawers or doors, etc
- For defrosting and cleaning, pull the mains plug out or switch off the fuse. Do not pull out the mains plug by tugging on the power cord.
- Store high-percentage alcohol tightly closed and standing up.
- Keep plastic parts and the door seal free of oil and grease. Otherwise, parts and door seal will become porous.
- Never cover or block the ventilation openings of the appliance!
- **Avoiding placing children and vulnerable people at risk:**

  At risk are children, people who have limited physical, mental or sensory abilities, as well as people who have inadequate knowledge concerning safe operation of the appliance.

  Ensure that children and vulnerable people have understood the hazards.

  A person responsible for safety must supervise or instruct children and vulnerable people who are using the appliance.

  Only children from 8 years and above may use the appliance.

  Supervise children who are cleaning and maintaining the appliance.

  Never allow children to play with the appliance.

- Do not store bottled or canned drinks (especially carbonated drinks) in the freezer compartment. Bottles and cans may burst!
- Never put frozen food straight from the freezer compartment into your mouth.
  Risk of low-temperature burns!
- Avoid prolonged touching of frozen food, ice or the evaporator pipes, etc.
  Risk of low-temperature burns!

Children in the household

- Keep children away from packaging and its parts. Danger of suffocation from folding cartons and plastic film!
- Do not allow children to play with the appliance!
- If the appliance features a lock:
  keep the key out of the reach of children!

General regulations

The appliance is suitable for cooling and freezing food.

This appliance is intended for use in the home and the home environment.

The appliance is suppressed according to EU Directive 2004/108/EC.

The refrigeration circuit has been checked for leaks.

This product complies with the relevant safety regulations for electrical appliances (EN 60335-2-24).

This appliance is intended for use up to a maximum height of 2000 metres above sea level.

Information concerning disposal

♻ Disposal of packaging

The packaging protects your appliance from damage during transit. All utilised materials are environmentally safe and recyclable. Please help us by disposing of the packaging in an environmentally friendly manner.

Please ask your dealer or inquire at your local authority about current means of disposal.

♻ Disposal of your old appliance

Old appliances are not worthless rubbish! Valuable raw materials can be reclaimed by recycling old appliances.



This appliance is labelled in accordance with European Directive 2012/19/EU concerning used electrical and electronic appliances (waste electrical and electronic equipment - WEEE). The guideline determines the framework for the return and recycling of used appliances as applicable throughout the EU.

⚠ Warning

Redundant appliances

1. Pull out the mains plug.
2. Cut off the power cord and discard with the mains plug.
3. Do not take out the trays and receptacles: children are therefore prevented from climbing in!
4. Do not allow children to play with the appliance once it has spent its useful life. Danger of suffocation!

Refrigerators contain refrigerant and gases in the insulation. Refrigerant and gases must be disposed of professionally. Ensure that tubing of the refrigerant circuit is not damaged prior to proper disposal.

Scope of delivery

After unpacking all parts, check for any damage in transit.

If you have any complaints, please contact the dealer from whom you purchased the appliance or our customer service.

The delivery consists of the following parts:

- Built-in appliance
- Interior fittings (depending on model)
- Bag containing installation materials
- Operating instructions
- Installation manual
- Customer service booklet
- Warranty enclosure
- Information on the energy consumption and noises

Installation location

Install the appliance in a dry, well ventilated room. The installation location should neither be exposed to direct sunlight nor near a heat source, e. g. a cooker, radiator, etc. If installation next to a heat source is unavoidable, use a suitable insulating plate or observe the following minimum distances to a heat source:

- 3 cm to electric or gas cookers.
- 30 cm to an oil or coal-fired cooker.

Room temperature, ventilation and cavity depth

Ambient temperature

The appliance is designed for a specific climate class. Depending on the climate class, the appliance can be operated at the following temperatures.

The climate class can be found on the rating plate. Fig. 12

Climate class	Permitted ambient temperature
SN	+10 °C to 32 °C
N	+16 °C to 32 °C
ST	+16 °C to 38 °C
T	+16 °C to 43 °C

Note

The appliance is fully functional within the room temperature limits of the indicated climatic class. If an appliance of climatic class SN is operated at colder room temperatures, the appliance will not be damaged up to a temperature of +5 °C.

Ventilation

The air on the rear panel of the appliance heats up. Conduction of the heated air must not be obstructed. Otherwise, the refrigeration unit must work harder. This increases power consumption. Therefore: Never cover or block the ventilation openings!

Cavity depth

A cavity depth of 560 mm is recommended for the appliance. If the cavity depth is smaller – at least 550 mm – the energy consumption increases slightly.

Connecting the appliance

After installing the appliance, wait at least 1 hour until the appliance is switched on. During transportation the oil in the compressor may have flowed into the refrigeration system.

Before switching on the appliance for the first time, clean the interior of the appliance (see chapter “Cleaning the appliance”).

Electrical connection

The socket must be near the appliance and also freely accessible following installation of the appliance.

The appliance complies with the protection class I. Connect the appliance to 220–240 V/50 Hz alternating current via a correctly installed socket with protective conductor. The socket must be fused with a 10 to 16 A fuse.

For appliances operated in non-European countries, check whether the stated voltage and current type match the values of your mains supply. This information can be found on the rating plate. Fig. 12

⚠ Warning

Never connect the appliance to electronic energy saver plugs.

Our appliances can be used with mains and sine-controlled inverters. Mains-controlled inverters are used for photovoltaic systems which are connected directly to the national grid. Sine-controlled inverters must be used for isolated applications (e.g. on ships or in mountain lodges) which are not connected directly to the national grid.

Getting to know your appliance

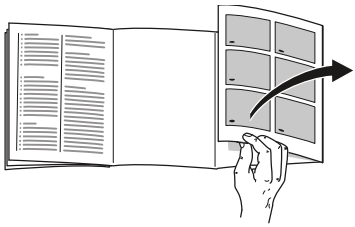

Please fold out the illustrated last page. These operating instructions refer to several models.

The features of the models may vary.

The diagrams may differ.

Fig. 1

A Freezer compartment
B Refrigerator compartment

1-4 Controls/light
5 Light switch
6 Glass shelf
7 Vegetable container
8 Butter and cheese compartment
9 Egg rack
10 Shelf for tubes and small tins
11 Shelf for large bottles

Controls

Fig. 2

1 **Main On/Off switch**

Serves to switch the whole appliance on and off.

2 **“super” button**

Switches super freezing on and off.

Illuminates when super freezing is on.

3 **Temperature display refrigerator compartment**
The numbers correspond to the set refrigerator compartment temperatures in °C.

4 **Refrigerator compartment temperature selection button**

The button sets the temperature in the refrigerator compartment.

Switching the appliance on

Switch on the appliance with the main On/Off switch. Fig. 2/1

The temperature display, Fig. 2/3, flashes until the appliance has reached the set temperature.

The appliance starts to cool, the light is switched on when the door is open.

We recommend a factory setting of +4 °C in the refrigerator compartment.

Do not store perishable food warmer than +4 °C.

Operating tips

- After the appliance has been switched on, it may take several hours until the set temperature has been reached.

  Do not put any food in the appliance beforehand.
- While the refrigeration unit is running, water droplets or hoarfrost may form at the rear panel of the refrigerator. This is due to functional reasons. It is not necessary to scrape off the frost or wipe off the water droplets. The rear panel defrosts automatically. The condensation collects in the drainage channel and is carried to the refrigeration unit where it evaporates. Fig. 3

Setting the temperature

Fig. 2

Refrigerator compartment

The temperature can be set from +2 °C to +8 °C.

Keep pressing temperature setting button on refrigerator compartment 4, until the required refrigerator compartment temperature is set.

The value last selected is saved. The set temperature is indicated on the temperature display for the refrigerator compartment 3.

Freezer compartment

The temperature in the freezer compartment depends on the temperature in the refrigerator compartment.

Lower temperatures in the refrigerator compartment also cause lower temperatures in the freezer compartment.

Usable capacity

Information on the usable capacity can be found inside your appliance on the rating plate. Fig. 12

Refrigerator compartment

The refrigerator compartment is the ideal storage location for meat, sausage, fish, dairy products, eggs, ready meals and pastries.

Storing food

- Store fresh, undamaged food. The quality and freshness will then be retained for longer.
- In the case of ready-made products and bottled goods, observe the best-before date or use-by date specified by the manufacturer.
- To retain aroma, colour and freshness, pack or cover food well before placing in the appliance. This will prevent the transfer of flavours and the discolouration of plastic parts in the refrigerator compartment.
- Allow warm food and drinks to cool down before placing in the appliance.

Note

Avoid contact between food and rear panel. Otherwise the air circulation will be impaired.

Food or packaging could freeze to the rear panel.

Note the chill zones in the refrigerator compartment

The air circulation in the refrigerator compartment creates different chill zones:

- Coldest zone is between the vegetable container and the glass shelf situated above. Fig. 4

  Note

  Store perishable food (e.g. fish, sausage, meat) in the coldest zone above the vegetable container.
- Warmest zone is at the very top of the door.

  Note

  Store e.g. hard cheese and butter in the warmest zone. Cheese can then continue to release its flavour and the butter will still be easy to spread.

Freezer compartment

Use the freezer compartment

- To store deep-frozen food.
- To make ice cubes.
- To freeze food.

Note

Ensure that the freezer compartment door has been closed properly. If the door is open, the frozen food will thaw. The freezer compartment will become covered in thick ice. Also: waste of energy due to high power consumption!

Max. freezing capacity

Information about the max. freezing capacity within 24 hours can be found on the rating plate. Fig. 12

Purchasing frozen food

- Packaging must not be damaged.
- Use by the “use by” date.
- Temperature in the supermarket freezer must be -18 °C or lower.
- If possible, transport deep-frozen food in an insulated bag and place quickly in the freezer compartment.

Freezing fresh food

Freeze fresh and undamaged food only.

To retain the best possible nutritional value, flavour and colour, vegetables should be blanched before freezing. Aubergines, peppers, zucchini and asparagus do not require blanching.

Literature on freezing and blanching can be found in bookshops.

Note

Keep food which is to be frozen away from food which is already frozen.

- The following foods are suitable for freezing:
  Cakes and pastries, fish and seafood, meat, game, poultry, vegetables, fruit, herbs, eggs without shells, dairy products such as cheese, butter and quark, ready meals and leftovers such as soups, stews, cooked meat and fish, potato dishes, soufflés and desserts.
- The following foods are not suitable for freezing:
  Types of vegetables, which are usually consumed raw, such as lettuce or radishes, eggs in shells, grapes, whole apples, pears and peaches, hard-boiled eggs, yoghurt, soured milk, sour cream, crème fraîche and mayonnaise.

Packing frozen food

To prevent food from losing its flavour or drying out, place in airtight containers.

1. Place food in packaging.
2. Remove air.
3. Seal the wrapping.
4. Label packaging with contents and date of freezing.

Suitable packaging:
Plastic film, tubular film made of polyethylene, aluminium foil, freezer containers.
These products are available from specialist outlets.

Unsuitable packaging:
Wrapping paper, greaseproof paper, cellophane, bin liners and used shopping bags.

Items suitable for sealing packaged food:
Rubber bands, plastic clips, string, cold-resistant adhesive tape, etc.

Bags and tubular film made of polyethylene can be sealed with a film heat sealer.

Shelf life of frozen food

Storage duration depends on the type of food.

At a temperature of -18 °C:

- Fish, sausage, ready meals and cakes and pastries:
  up to 6 months
- Cheese, poultry and meat:
  up to 8 months
- Vegetables and fruit:
  up to 12 months

Super freezing

Food should be frozen solid as quickly as possible in order to retain vitamins, nutritional value, appearance and flavour.

Several hours before placing fresh food in the freezer compartment, switch on super freezing to prevent an unwanted temperature rise.

This appliance runs constantly and the freezer compartment drops to a very low temperature.

If the max. freezing capacity is to be used, super freezing must be switched on for 24 hours before the fresh produce is placed in the freezer compartment.

Smaller quantities of food (up to 2 kg) can be frozen without “super freezing”.

Note
When super freezing is switched on, increased operating noises may occur.

Switching on and off

Fig. **2**

Press “super” button 2.

If the super freezing has been switched on the button is lit.

Super freezing automatically switches off after approx. 2½ days.

Note
During super freezing the refrigerator compartment becomes a little colder.

Thawing frozen food

Depending on the type and application, select one of the following options:

- at room temperature
- in the refrigerator
- in an electric oven, with/without fan assisted hot-air
- in the microwave

⚠ Caution

Do not refreeze thawing or thawed food. Only ready meals (boiled or fried) may be refrozen.

No longer store the frozen produce for the max. storage period.

Interior fittings

You can reposition the shelves inside the appliance and the door shelves as required:

- Pull shelf forwards, lower and swing out to the side. Fig. **5**
- Raise the door shelf and remove. Fig. **6**

Special features

(not all models)

Vario shelf
Fig. **7**
To facilitate the storage of tall items (e.g. cans or bottles), the front part of the Vario shelf can be taken out and pushed under the rear part.

Bottle holder
Fig. **8**
The bottle holder prevents bottles from falling over when the door is opened and closed.

Drawer for sausage and cheese
Fig. **9**
The drawer can be removed for adding and removing food. Lift the drawer and pull out. The drawer holder can be adjusted.

Ice cube tray
Fig. **10**

1. Fill the ice cube tray ¾ full of drinking water and place in the freezer compartment.
2. If the ice tray is stuck to the freezer compartment, loosen with a blunt implement only (spoon-handle).
3. To loosen the ice cubes, twist the ice tray slightly or hold briefly under flowing water.

Sticker “OK”

(not all models)

The “OK” temperature monitor can be used to determine temperatures below +4 °C. Gradually reduce the temperature if the sticker does not indicate “OK”.

Note

When the appliance is switched on, it may take 12 hours until the temperature is reached.



Correct setting

Switching off and disconnecting the appliance

Switching the appliance off

Fig. 2
Press the main On/Off switch 1 (red circle becomes visible).

Temperature display goes out. Fridge and light are switched off.

Disconnecting the appliance

If you do not use the appliance for a prolonged period:

1. Switch off the appliance.
2. Pull out mains plug or switch off fuse.
3. Clean the appliance.
4. Leave the appliance door open.

Defrosting

Refrigerator compartment defrosts fully automatically

While the refrigerating unit is running, beads of condensation or hoarfrost form at the back of the refrigerator compartment. This is quite normal. It is not necessary to wipe off the condensation or frost. The rear panel defrosts automatically. The condensation runs into the condensation channel, Fig. 3. and is conveyed to the refrigerating unit where it evaporates.

Note

Keep the condensation channel and drainage hole clean, so that the condensation can run out.

Defrosting the freezer compartment

The freezer compartment does not defrost automatically, otherwise the frozen food would start thawing. A layer of frost in the freezer compartment impairs refrigeration of the frozen food and increases power consumption. Remove the layer of hoarfrost regularly.

⚠ Caution

Do not scrape off hoarfrost or ice with a knife or pointed object. You could damage the refrigerant tubes. Leaking refrigerant may ignite or cause eye injuries.

Proceed as follows:

1. Remove the frozen food and place temporarily in a cool location.
2. Switch the appliance off.
3. Pull out the mains plug or remove the fuse.
4. To accelerate the defrosting process, place a pan of hot water on a trivet in the freezer compartment.
5. Wipe up condensation with a cloth or sponge.
6. Wipe dry the freezer compartment.
7. Switch the appliance on again.
8. Put the frozen food back in the freezer compartment.

Cleaning the appliance

⚠ Caution

- Do not use abrasive, chloride or acidic cleaning agents or solvents.
- Do not use scouring or abrasive sponges. The metallic surfaces could corrode.
- Never clean the shelves or containers in the dishwasher. The parts may become deformed!

Proceed as follows:

1. Before cleaning: Switch off the appliance.
2. Pull out the mains plug or switch off the fuse!
3. Take out the food and store in a cool location. Place ice pack (if available) on the food.
4. Wait until the layer of frost has thawed.
5. Clean the appliance with a soft cloth, lukewarm water and a little pH neutral washing-up liquid. The rinsing water must not run into the light or through the drainage hole into the evaporation area.
6. Wipe the door seal with clear water only and then wipe dry thoroughly.
7. After cleaning reconnect and switch the appliance back on.
8. Put the food back into the appliance.

Interior fittings

All variable parts of the appliance can be taken out for cleaning.

Take out glass shelves
Fig. **5**

Lift the glass shelves, pull forwards, lower and swivel out to the side.

Condensation channel
Fig. **3**

Regularly clean the condensation channel and drainage hole with a cotton bud or similar implement to ensure that the condensation can drain.

Take out shelves in the door
Fig. **6**

Lift shelves upwards and take out.

Tips for saving energy

- Install the appliance in a dry, well ventilated room! The appliance should not be installed in direct sunlight or near a heat source (e.g. radiator, cooker).

  If required, use an insulating plate.
- Select 560 mm cavity depth.

  A smaller cavity depth will result in a higher energy consumption.
- Allow warm food and drinks to cool down before placing in the appliance.
- Thaw frozen food in the refrigerator compartment and use the low temperature of the frozen food to cool refrigerated food.
- Open the appliance as briefly as possible.
- Regularly defrost the freezer compartment to remove the layer of frost.

  A layer of hoarfrost will impair refrigeration of the frozen food and increase power consumption.
- Ensure that the freezer compartment door is always closed properly.
- To avoid increased power consumption, occasionally clean the back of the appliance.
- The arrangement of the fittings does not affect the energy rating of the appliance.

Operating noises

Quite normal noises

Droning
Motors are running (e.g. refrigerating units, fan).

Bubbling, humming or gurgling noises
Refrigerant is flowing through the tubing.

Clicking
Motor, switches or solenoid valves are switching on/off.

Preventing noises

The appliance is not level
Please align the appliance with a spirit level. If required, place something underneath.

Containers or storage areas wobble or stick
Please check the removable parts and re-insert them correctly if required.

Bottles or receptacles are touching each other
Move the bottles or receptacles slightly away from each other.

Eliminating minor faults yourself

Before you call customer service:

Please check whether you can eliminate the fault yourself based on the following information.

Customer service will charge you for advice – even if the appliance is still under guarantee!

Fault	Possible cause	Remedial action
Temperature differs greatly from the set value.		In some cases it is adequate to switch off the appliance for 5 minutes. If the temperature is too high wait a few hours and check whether the temperature has approached the set value. If the temperature is too low check the temperature again the next day.
The light does not work.	The bulb is defective.	Replace bulb. Fig. **11**/B 1. Switch the appliance off. 2. Pull out mains plug or switch off fuse. 3. Slide cover forwards and remove. 4. Change the bulb. (Replacement bulb: 220-240 V a.c., E14 bulb holder, see defective bulb for wattage.)
	Light switch is jammed.	Check whether the light switch can move. Fig. **11**/A
There is a thick layer of frost in the freezer compartment.		Defrosting the freezer compartment (see chapter Defrosting). Always ensure that the freezer compartment door is closed properly.
Bottom of the refrigerator compartment is wet.	The condensation channel or drainage hole are blocked.	Clean the condensation channel and the drainage hole. See chapter Cleaning the appliance. Fig. **3**
The temperature in the refrigerator compartment is too cold.	Freezer compartment door is open.	Close the freezer compartment door. The freezer compartment door engages audibly.
	Temperature has been set too low.	Increase the temperature.
	Super freezing is switched on.	Switch off super freezing.

Fault	Possible cause	Remedial action
The refrigerating unit is switching on more frequently and for longer.	Appliance opened frequently.	Do not open the appliance unnecessarily.
	The ventilation openings have been covered.	Remove obstacles.
Temperature display for the refrigerator compartment flashes. Fig. 2/3	Appliance opened frequently.	Do not open the appliance unnecessarily.
	Too much food was placed in the compartment.	Before placing food in the freezer, press the super button 2/2.
	The airing and ventilation openings are blocked.	Remove obstacles.
Appliance has no refrigeration capacity.	■ Appliance has been switched off. ■ Power failure. ■ The fuse has been switched off. ■ The mains plug has not been inserted properly.	Press main On/Off switch. Fig. 2/1 Check whether the power is on. Check the fuse.
The interior light glows at a reduced luminosity when the door is almost closed (or light switch depressed).	Ambient temperature is below 20 °C or super freezing has been switched on. Not a fault!	The interior light goes out again at ambient temperatures above 20 °C or after super freezing has been switched off.

Customer service

Your local customer service can be found in the telephone directory or in the customer-service index. Please provide customer service with the appliance product number (E-Nr.) and production number (FD).

These specifications can be found on the rating plate. Fig. 12

To prevent unnecessary call-outs, please assist customer service by quoting the product and production numbers. This will save you additional costs.

Repair order and advice on faults

Contact information for all countries can be found on the enclosed customer service list.

GB	0344 892 8989	Calls charged at local or mobile rate.
IE	01450 2655	0.03 € per minute at peak. Off peak 0.0088 € per minute.

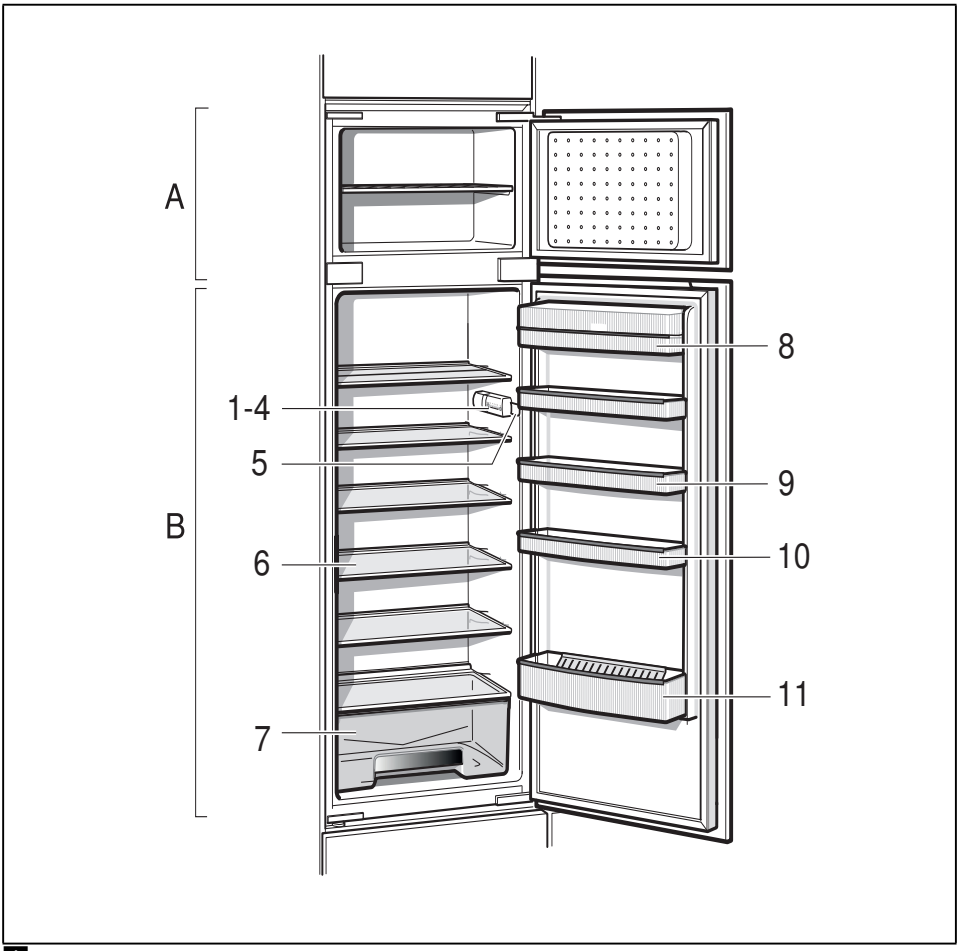

1

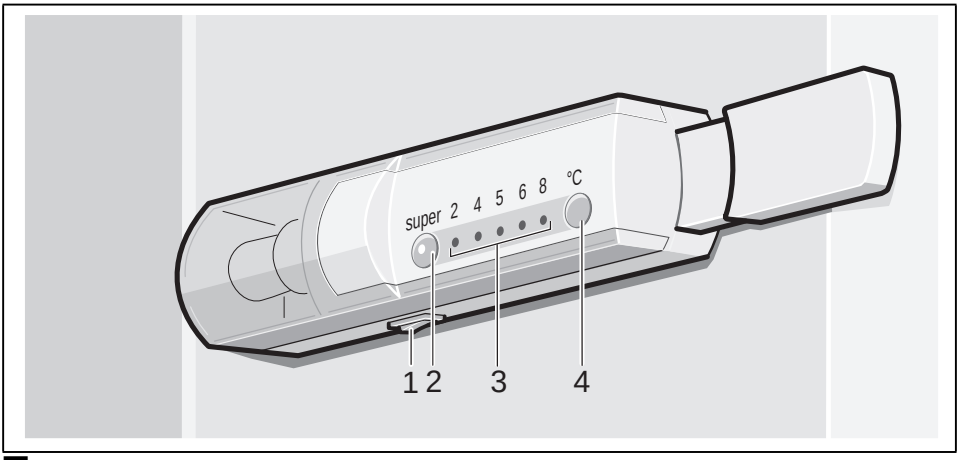

2

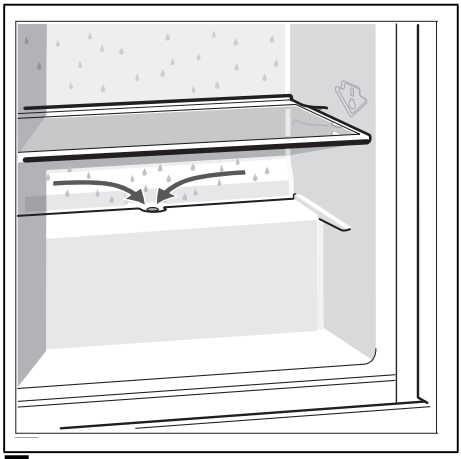

3

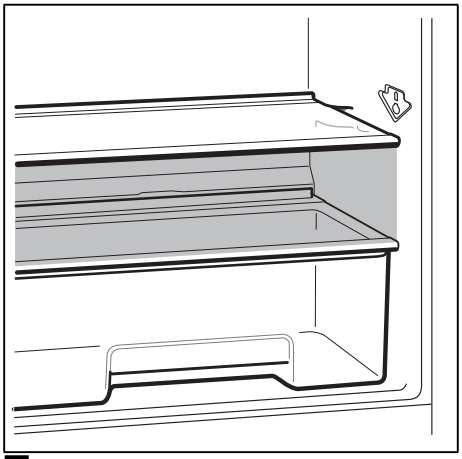

4



5

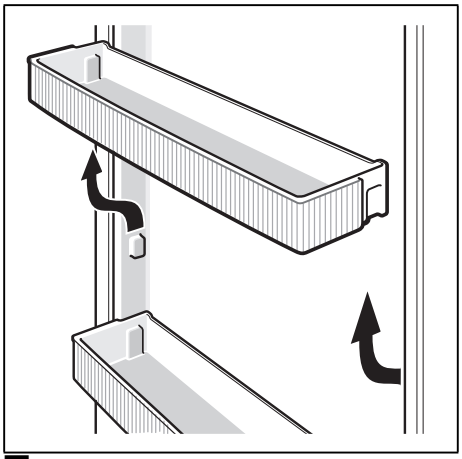

6

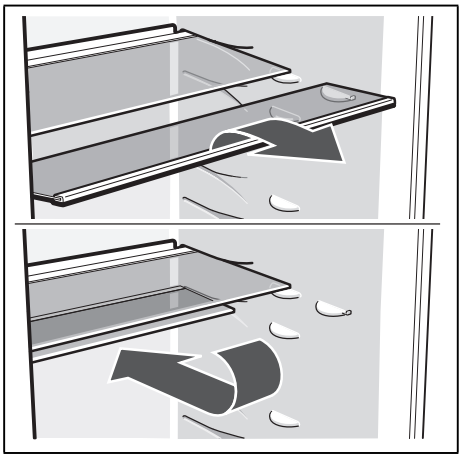

7

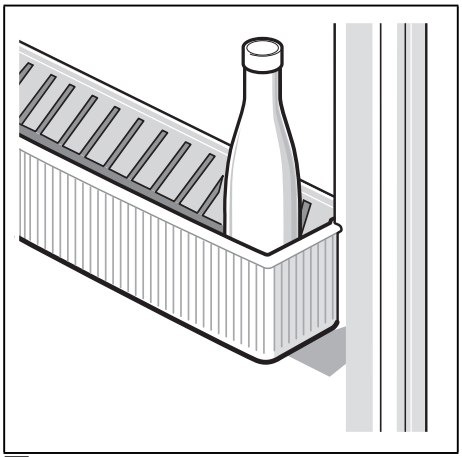

8

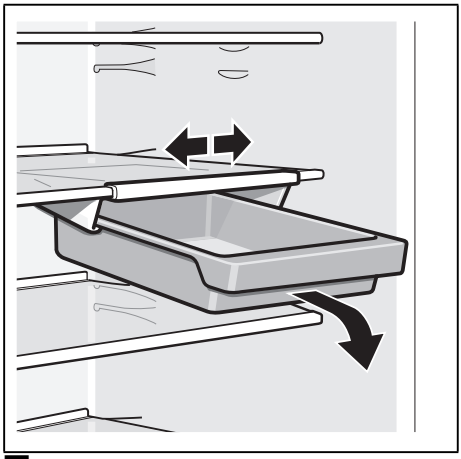

9

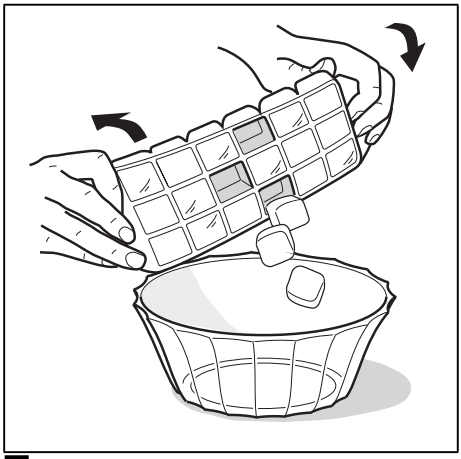

10

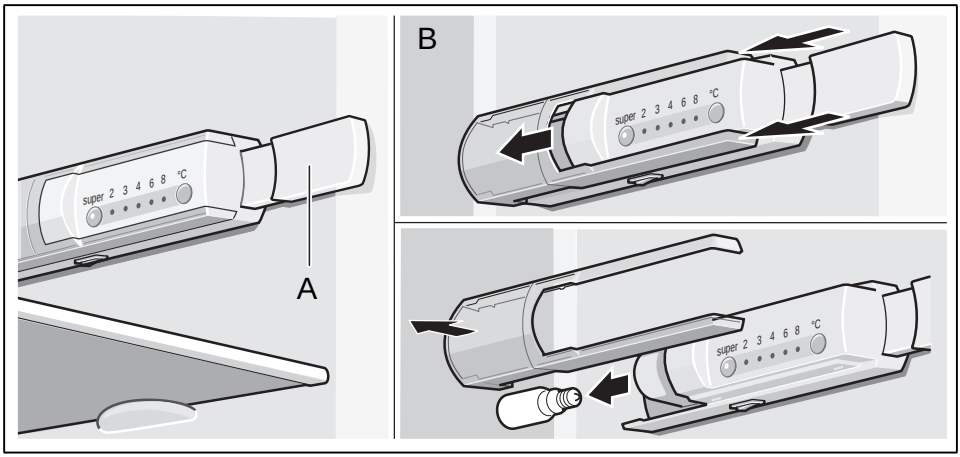

11

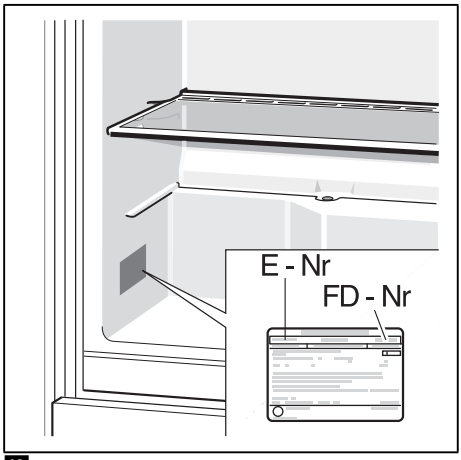

12



Constructa-Neff Vertriebs-GmbH
Carl-Wery-Straße 34
81739 München, GERMANY

www.neff-international.com

8001025814 (9510)
en