Criterion®

User's Manual

22.5 cu.ft. Refrigerator

Models: CFDR225H1S(453-8128)

BEFORE USING YOUR PRODUCT:

Please read this manual carefully and follow all safety rules & operating instructions. Keep this manual for future reference.

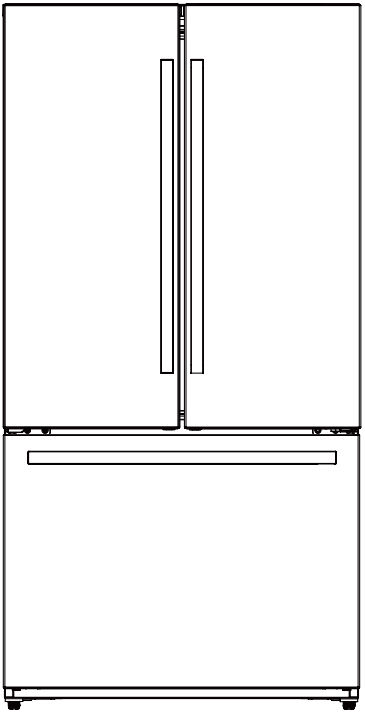

OPERATION MANUAL

Service Support

888-411-7118

105 Satellite Blvd NW, Suwanee, GA 30024

Criterion@hisense.com

Contents

Thank you for choosing Criterion. We are sure you will find your new refrigerator a pleasure to use. However, before you use the appliance, we recommend that you carefully read the instructions, which provide details about installing and using the product. Please keep this manual for future reference.

Safety and warning information 01
Installing your new appliance 07
Description of the appliance 17
Display controls 18
Using your appliance 22
Cleaning and care 25
Helpful hints and tips 27
Troubleshooting 29
Disposal of the appliance 32

⚠ IMPORTANT ⚠

1. Please read Owner's Manual.
2. Stand refrigerator upright for 4 hours and level appliance prior to plugging in.
3. DO NOT RETURN TO STORE before calling Customer Service with questions or problems.

For questions or assistance, please contact Customer Service at: 1-888-411-7118 between 9:00 am and 6:00 pm EST or ernail: Criterion@hisense.com

Safety and warning information

General safety

- **WARNING**
  This appliance is intended to be used in household and similar applications such as 1.staff kitchen areas in shops, offices and other working environments; 2.farm houses and by clients in hotels, motels and other residential type environments;
  1. bed and breakfast type environments;
  2. catering and similar non-retail applications.
- **WARNING**
  Fill with potable water only.
- **WARNING**
  Do not store explosive substances such as aerosol cans with a flammable propellant in this appliance.
- **WARNING**
  If the supply cord is damaged, it must be replaced by the manufacturer, its service agent or similarly qualified persons in order to avoid a hazard.
- **WARNING**
  Keep ventilation openings, in the appliance enclosure or in the built-in structure, clear of obstruction.
- **WARNING**
  Do not use mechanical devices or other means to accelerate the defrosting process,other than those recommended by the manufacturer.
- **WARNING**
  Do not damage the refrigerant circuit.
- **WARNING**
  Do not use electrical appliances inside the food storage compartments of the appliance, unless they are of the type recommended by the manufacturer.

Safety and warning information

General safety

- **WARNING**
  The refrigerant and insulation blowing gas are flammable. When disposing of the appliance, do so only at an authorized waste disposal centre. Do not expose to flame.
- **WARNING**
  When positioning the appliance, ensure the supply cord is not trapped or damaged.
- **WARNING**
  Do not locate multiple portable socket-outlets or portable power supplies at the rear of the appliance.

Replacing the illuminating lamps

- **WARNING**
  The illuminating lamps must not be replaced by the user! If the illuminating lamps is damaged, contact the customer helpline for assistance. This warning is only for refrigerators that contain illuminating lamps.

Safety and warning information

Refrigerant

The refrigerant isobutene (R600a) is contained within the refrigerant circuit of the appliance, a natural gas with a high level of environmental compatibility, which is nevertheless flammable. During transportation and installation of the appliance, ensure that none of the components of the refrigerant circuit becomes damaged. The refrigerant (R600a) is flammable.

- **WARNING**
  Refrigerators contain refrigerant andgases in the insulation. Refrigerant and gases must be disposed of professionally as they may cause eye injuries or ignition. Ensure that tubing of the refrigerant circuit is not damage prior to proper disposal.
- **WARNING**
  Risk of fire / flammable materials If the refrigerant circuit should be damaged:
  1. Avoid opening flames and sources of ignition.
  2. Thoroughly ventilate the room in which the appliance is situated.
     It is dangerous to alter the specifications or modify this product in any way. Any damage to the cord may cause a shortcircuit, fire, and/or electric shock.

Safety and warning information

Electrical safety

1. The power cord must not be lengthened.
2. Make sure that the power plug is not crushed or damaged. A crushed or damaged power plug may overheat and cause a fire.
3. Make sure that you can access the main plug of the appliance.
4. Do not pull the main cable.
5. If the power plug socket is loose, do not insert the power plug. There is a risk of electric shock or fire.
6. You must not operate the appliance without the interior lighting lamp cover.
7. The fridge is only applied with power supply of single phase alternating current of 110~115V/60Hz. If fluctuation of voltage in the district of user is so large that the voltage exceeds the above scope, for safety sake, be sure to apply A.C. Automatic voltage regulator of more than 350W to the fridge. The fridge must employ a special power socket instead of common one with other electric appliances. Its plug must match the socket with ground wire.

Daily use

- Do not store flammable gass or liquids in the appliance, There is a risk of an explosion.
- Do not operate any electrical appliances in the appliance (e.g.electric ice cream makers,mixers etc.).
- When unplugging always pull the plug from the mains socket,do not pull on the cable.
- Do not place hot items near the plastic components of this appliance.
- This refrigerating appliance is not intended to be used as a built-in appliance.
- Do not place food products directly against the air outlet onthe rear wall.
- Store pre-packed frozen food in accordance with the frozen food manufacture's instructions.
- The appliances manufactures storage recommendations should be strictly adhered to. Refer to relevant instructions for storage.
- Do not place carbonated or fizzy drinks in the freezer compartment as it creates pressure on the container, which may cause it to explode, resulting in damage to the appliance.

Safety and warning information

- Do not place food products directly against the air outlet on the rear wall.
- Store pre-packed frozen food in accordance with the frozen food manufacture's instructions.
- The appliances manufactures storage recommendations should be strictly adhered to. Refer to relevant instructions for storage.
- Do not place carbonated or fizzy drinks in the freezer compartment as it creates pressure on the container,which may cause it to explode,resulting in damage to the appliance.
- Frozen food can cause frost burns if consumed straight from the freezer compartment.
- Do not place the appliance in direct sunlight.
- Keep burning candles,lamps and other items with naked flames away from the appliance so that do not set the appliance on fire.
  The appliance is intended for keeping food stuff and/or beverages in normal household as explained in this instruction booklet.The appliance is heavy.Care should be taken when moving it.
- Do not remove nor touch items from the freezer compartment if your hands are damp/wet,as this could cause skin abrasions or frost/freezer burns.
- Never use the base,drawers, doors etc. to stand on or assupports.
  Frozen food must not be refrozen once it has been thawedout.
- Do not consume ice popsicles or ice cubes straight from the freezer as this can cause freezer burn to the mouth and lips. ,
- To avoid items falling and causing injury or damage to the appliance, do not overload the door racks or put too much food in the crisper drawers.

Caution! Care and cleaning

- Before maintenance, switch off the appliance and disconnect the mains plug from the mains socket.
- Do not clean the appliance with metal objects, steam cleaner, ethereal oils, organic solvents or abrasive cleansers.
- Do not use sharp objects to remove frost from the appliance. Use a plastic scraper.

Safety and warning information

Installation Important

- For electrical connection carefully, follow the instructions given in this manual. Unpack the appliance and check if there are damages on it.
- Do not connect the appliance if it is damaged. Report possible damages immediately to the place you bought it. In this case retain packing.
- It is advisable to wait at least four hours before connecting the appliance to allow the oil to flow back in the compressor.
- Adequate air circulation should be around the appliance, lacking this leads to overheating. To achieve sufficient ventilation, follow the instructions relevant to installation.
- Wherever possible the back of the product should not be too close to a wall to avoid touching or catching warm parts (compressor, condenser) to prevent the risk of fire, follow the instructions relevant to installation.
- The appliance must not be locate close to radiators or cookers.
- Make sure that the mains plug is accessible after the installation of the appliance.

Service

- Any electrical work required to do the servicing of the appliance should be carried out by qualified electrician or competent person.
- This product must be serviced by an authorized Service Center, and only genuine spare parts must be used.
  1. If the appliance is Frost Free.
  2. If the appliance contains freezer compartment.

Installing your new appliance

Before using the appliance for the first time, you should be aware of the following tips.

Ventilation of appliance

In order to improve efficiency of the cooling system and save energy, it is necessary to maintain good ventilation around the appliance for the dissipation of heat. For this reason, sufficient clear space should be available around the refrigerator.

Suggest:

It is advisable for there to be at least 2"(50mm) of space from the back to the wall, at least 2"(50mm) from its top, at least 1/2"(12mm) from its side to the wall and a clear space in front to allow the doors to open 125°, as shown in the following diagram.

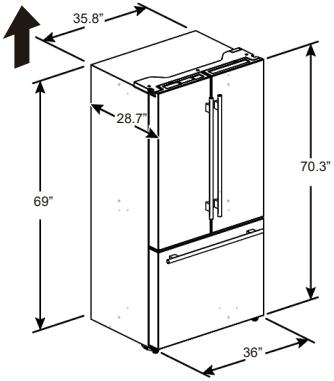

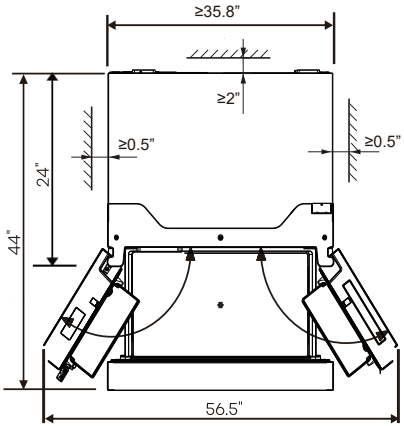

Note

This appliance performs well in the climate class from N to T. It may not work properly if being left at a temperature above or below the indicated range for a long period.

Climate class	Ambient temperature
SN	+50°F to +90°F
N	+61°F to +90°F
ST	+61°F to +100°F
T	+61°F to +109°F

Stand your appliance in a dry place to avoid high moisture damage. Keep the appliance out of direct sunlight, rain or frost. Stand the appliance away from heat sources such as stoves, fires or heaters.

Installing your new appliance

Leveling of appliance

- For sufficient leveling and air circulating in the lower rear section of the appliance, the bottom feet may need to be adjusted. Please use a suitable spanner.
- To allow the doors to self-close, tilt back the top backwards at about 15mm or 0.5 by turning the adjustable feet.
- Whenever you want to move the appliance, remember to turn the feet back up, so that the appliance can roll freely. Reinstall the appliance whenrelocating.

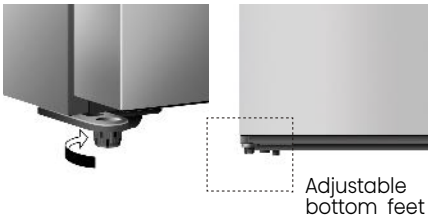



Warning

- For proper installation, this refrigerator must be placed on a level surface of hard material that is the same height as the rest of the flooring, This surface should be strong enough to support a fully loaded refrigerator.
- The rollers, which are not castors, should be only used for forward or backward movement. Moving the refrigerator sideways may damage your floor and the rollers.

Adjusting Door Height and Door Gap

The height of a door can be adjusted using the provided Snap Rings.

Tools you will need:

	
Snap Ring (4pcs)	Wrench(Not provided)

Installing your new appliance

To adjust the Height of Door

1. Check the height difference between the doors and then lift and hold the lowest door to be even with the other.
2. Insert a suitably sized Snap Ring between the Door and the Hinge as shown.

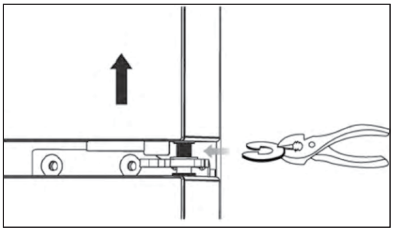

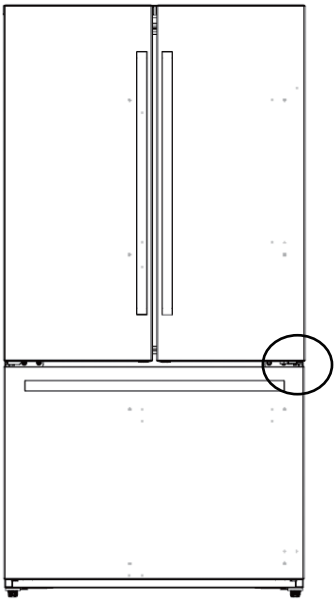

IMPORTANT !

- Insert only one Snap Ring. If you insert two or more Snap Rings, they may slip out or cause a rubbing noise.
- Do not raise the door too much. The door may contact and damage the top cover.
- Save remaining Snap Rings for possible future use.

Warning

Contains Small Parts, keep the Snap Rings Away From Babies and Children.

Installing your new appliance

Removing & Assembling Handles

Be very careful not to scratch the doors or the drawers if you must remove the handles. The appearance of the handles may vary from what is shown in the manual.

Tools you will need(Provided)

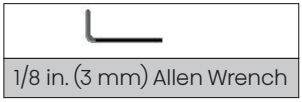

Removing Handles

1. Loosen the M6 x 8 mm set screws with a 1/8 in. (3 mm) Allen wrench and remove the handle.

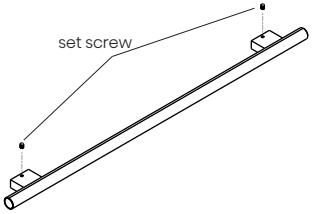

2. If needed, loosen and remove the mounting fasteners that connect the handle and the refrigerator door (or the freezer drawer).

Assembling Handles

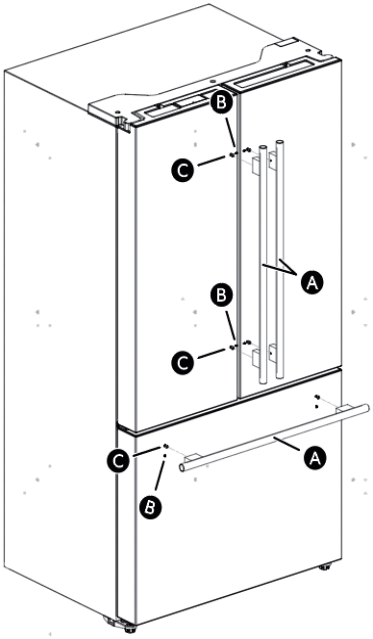

A: Handle
B: Set screw
C: Mounting fastener

1. If needed, reassemble the mounting fasteners on the door (or the drawer).

2. Partially insert the M6 x 8 mm set screws provided into both ends of the handle.

3. Place the handle on the door (or the drawer) by fitting the handle footprints over the mounting fasteners and tightening the set screws with a 1/8 in. (3 mm) Allen wrench.

Installing your new appliance

Door Removal

In case your home access door is too narrow for the refrigerator to pass through, remove the refrigerator doors and drawers. If you do not need to remove the appliance doors, proceed to 'Installing Water Lines' on page 8. If you need to remove the doors, continue below.

Tools you will need(Not provided)

	
Allen Wrench (5/32",4mm)	Wrench (5/16",8mm)
	
Philips Screwdriver	

1. With the door closed, remove the 3 screws holding the top cover (A) with Philips (+) screw driver, and then remove the top cover with the entire-harness attached.

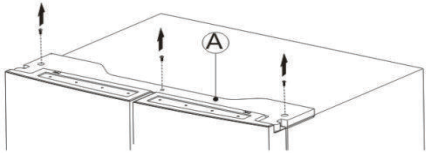

2. Remove the 3 screws (B) fixed on the hinges with a wrench (5/16", 8mm) and 1 ground screw (C) attached to the hinge with Philips (+) screw driver. Remove the upper left and right door hinges(D).

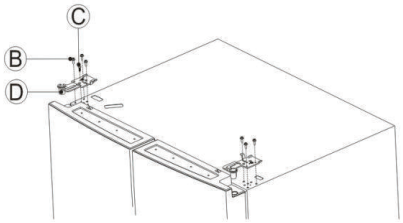

3. Using both hands, open both refrigerator compartment doors more than 90 degrees, then lift the door up and off. Store the doors in a safe place to avoid damage.

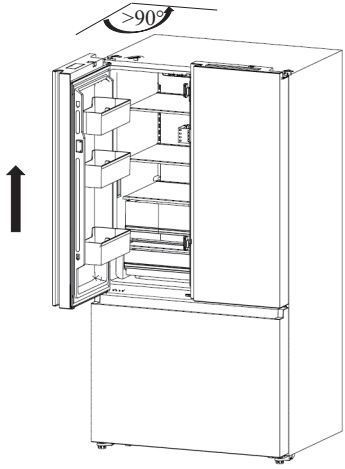

Installing your new appliance

4. Use a 5 mm Allen wrench to remove the four hex head hinge bolts (two per hinge) on the lower left and rights sides of your refrigerator, then remove the hinges.

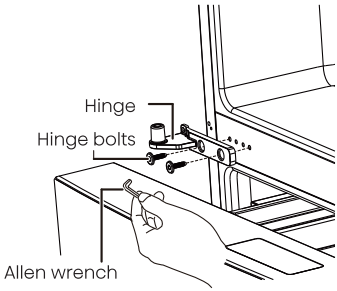

5. Pull the freezer compartment door and the upper freezer drawer fully open.

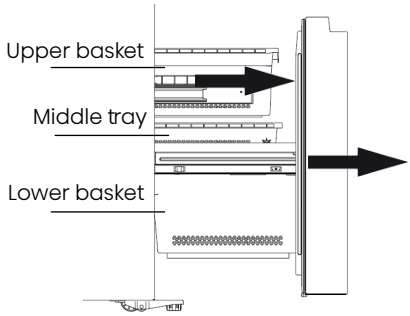

6. If equipped, remove the ice bin.

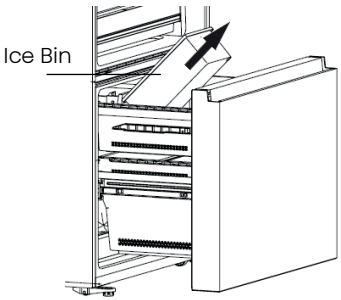

7. Pull out the upper basket. Lift the front of the basket up and pull it straight out.

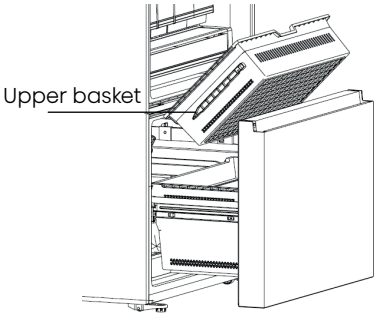

8. Pull out the middle tray. Lift the front of the tray up and pull it straight out.

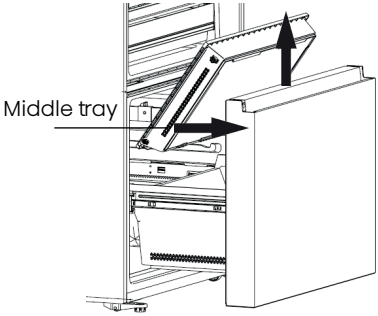

9. Lift the front of the lower basket up and pull it straight out.

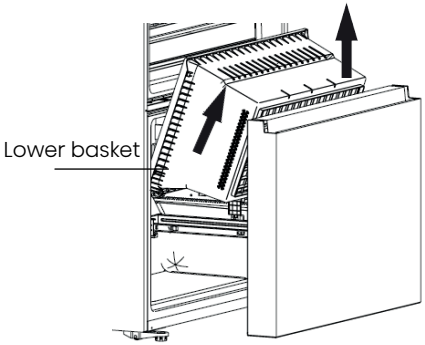

Installing your new appliance

10. Remove the screw on each side of the rail.

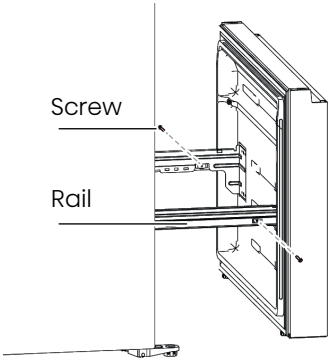

11. Pull the bottom of freezer compartment door away from the support frame, then lift the door up and out. Store the door in a safe place to avoid damage.

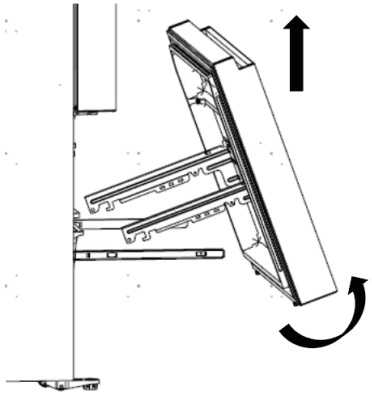

To reattach the fridge doors after you have moved the appliance to its final location, follow the instructions in reverse order.

Installing your new appliance

Installing the water lines

- Ice & water dispenser with a filter is one of the helpful features on your new appliance. To help promote better health, the water filter removes unwanted particles from your water.
- Please follow the below instructions carefully for correct installation.
- In order for the ice & water dispenser to operate properly, a water line is required.

– the maximum inlet water pressure is 120 PSI (827 Kpa)

- the minimum inlet water pressure is 30 PSI (207 Kpa)

⚠ WARNING

- The water connection must be made by a qualified plumber. Operation outside the water pressure range may cause malfunction, or severe and damaging water leaks.
- Under normal conditions, a 200cc (5.75oz.) cup can be filled in about 10 seconds.
- If the refrigerator is installed in an area with low water pressure (below 30psi), you can install a booster pump to compensate for the low pressure.

What you need to have before you begin

1. Power drill and 1/4" drill bit.
2. 1/2" or adjustable wrench.
3. Flat blade and Philips head screwdrivers.



❶ Saddle-type Shut Off valve (1/4" outlet)



❷ one 1/4" compression



❸ 1 ferrule (sleeve)



❹ 1/4" extension tubing



❺ 1 Coupler



❻ 2 Clips

4. You may need to purchase No.1, No.2, and No.3 parts to complete connection. You may find these items sold as a kit at a local hardware store.

Connecting to the water supply line

1. First, shut off the main water supply.



2. Using a power drill and a 1/4" drill bit drill into the cold-water line and connect the saddle-type shutoff valve.

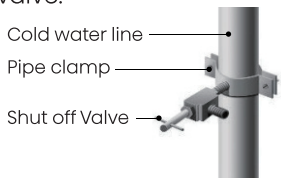

Installing your new appliance

3. Connect 1/4" extension tubing to shutoff valve outlet.

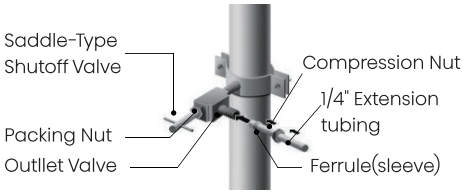

4. Flush the tubing. Turn the main water supply on and flush out the tubing until the water is clear. Then, shut the water off at the water valve after about a quart of water has flushed through the tubing.



5. Connect the extension tubing line with the line on the back of the fridge via the coupler. Fully insert the extension tubing into the coupler, and then insert the clip onto the coupler to lock in the tubing. Do the same with the other end. After both clips are inserted, check the line to make sure it is held firmly by the clips.

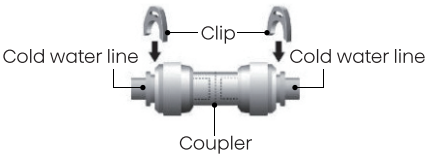

NOTE:
Ensure that the water line does not get pinched or bent when installing.
This can result in improper water flow through the line and will affect the functionality of the fridge.

6. Turn the water on and check for leakage.



Connect Water Line to Refrigerator

Important:
If you turn the refrigerator on before the water is connected, turn off the ice maker.

1. You may need to purchase below items to complete this connection. And you may find these items sold as a kit at a local hardware store.

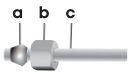

a Ferrule (Sleeve) -1 pcs
b 1/4" Compression Nut - 1 pcs
c 1/4" Water Line -1 pcs

2. Unplug refrigerator or disconnect power.
3. Close shutoff value.
4. Thread a 1/4" compression nut and ferrule (sleeve) onto the free end and of 1/4" water line.
5. Insert the free and of the 1/4" water line into the brass fitting attached to the water inlet on the back of the refrigerator.

6. Slide the 1/4" compression nut over the ferrule (sleeve) and screw the 1/4" compression nut onto the brass fitting.

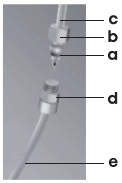

c 1/4" Water Line
b 1/4" Compression Nut
a Ferrule (Sleeve)
d Brass Fitting
e Water Inlet

7. Confirm 1/4" water line is secure by gently pulling on it.
8. Turn on water supply and check for leaks. Correct any leaks.

NOTE:

- Use only the new tubing supplied with the refrigerator. Old tubing should not be used. After connected to the water supply line, please open the water valve to flush the filter for 5 minutes before use.
- The initial dark discoloration of water is normal.

⚠ WARNING

- The water line must be connected to the cold water pipe. Connecting it to the hot water pipe may cause the water filter to malfunction.
- Avoid contamination of pipes during installation.
- Connect to potable water supply only.

Description of the appliance

View of the appliance

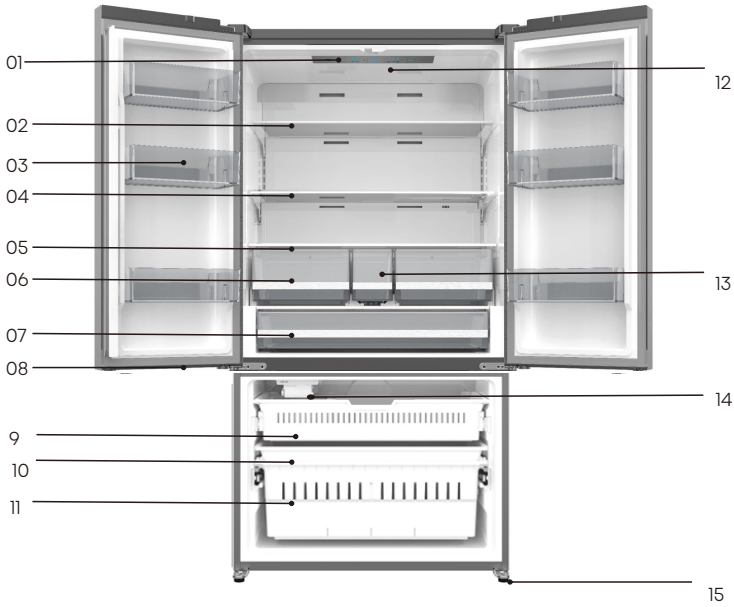

1. Control Panel
2. Vertical Baffle Part
3. Refrigerator Door Bin
4. Glass Shelf
5. Crisper Cover
6. Fruits and vegetables Crisper
7. Full width pantry
8. Freezer LED light
9. Upper Freezer Drawer
10. Middle Freezer Drawer
11. Lower Freezer Drawer
12. Refrigerator LED Light
13. Middle Storage Drawer
14. Ice maker
15. Leveling Leg

Note

Due to constant development of our products, your refrigerator may be slightly different from this instruction manual, but its functions and usage remain the same.
To get the best energy efficiency of this product, please place all shelves, drawers on their original position as the illustration above.

Display controls

Your product has one control panel which is installed on the fridge door. Use your appliance according to the following control guidelines.



Setting Compartment Temperatures

When you set a temperature, you are setting an average temperature for the entire compartment. The actual compartment temperatures may vary from the temperatures displayed depending on the amount and placement of stored food, and the surrounding room temperature.

Recommended Temperature Settings

- Fridge Compartment: 39°F (4°C)
- Freezer Compartment: 0°F (-18°C)

TEMP. °F/°C Hold 3 Sec **"°F /°C"**

To toggle between Celsius and Fahrenheit on the display, press and hold the "TEMP." button for three seconds.

Fridge **"Fridge temperature control"**

Press the "ZONE" button until the "Fridge" icon appears, then press the "TEMP." button repeatedly to cycle through the available temperature settings from 46°F to 36°F.

46°F – 45°F – 44°F – ····· 36°F – 37°F – 38°F

If you have set the temperature type to °C, the temperature setting cycle from 8°C to 2°C.

8°C – 7°C – 6°C – 5°C 2°C – 3°C – 4°C

Release the "TEMP." button control when the desired temperature setting appears.

Note

Each press of the button decrease the setting by one degree.

Freezer **"Freezer temperature control"**

Press the "ZONE" button until the "Freezer" icon appears, then press the "TEMP." button repeatedly to cycle through the available temperature settings from 7°F to -11°F.

7°F – 6°F – ····· -11°F – -10°F

Display controls

If you have set the temperature type to °C , the temperature setting cycle from -14°C to -24°C.

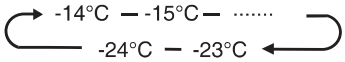

Release the "TEMP." button control when the desired temperature setting appears.

Note

Each press of the button decrease the setting by one degree.

Super Cool

"Super Cool"

The Super Cool feature helps to keep food stored in the refrigerator at the set temperature during periods of high usage, large grocery loads, or temporarily warm room temperatures. The Super Cool feature lowers the temperature in the fridge compartment.

1. Press the "MODE" button to activate this function. The "Super Cool" icon will be illuminated and the fridge temperature indicator will display 36°F (2°C).

2. Super Cool will automatically turn off after 3 hours.

3. When Super Cool function is on you can turn it off by pressing the "MODE" button or setting fridge temperature. To manually turn off the Super Cool function, the fridge temperature setting will revert back to the previous setting.

Super Freeze

"Super Freeze"

Super Freeze will quickly lower the temperature within the freezer so food will freeze faster than usual. This feature also helps to keep vitamins and nutrition of fresh food and keep for longer period.

1. Press the "MODE" button to activate this function. The "Super Freeze" icon will be illuminated and the temperature for the freezer is set to -11°F(-24°C).

2. Super Freeze will automatically turn off after 52 hours.

3. When Super Freeze function is on you can turn it off by pressing the "MODE" button or setting freezer temperature. To manually turn off the Super Freeze function,the freezer temperature setting will revert back to the previous setting.

Display controls

Note

When you selecting the Super Freeze function, ensure there are no bottled or canned drinks(especially carbonated drinks) in the freezer compartment. Bottles and cans may explode.



"Eco"

Press the "MODE" button to turn on the energy saving function, the "Eco" icon will be illuminated. When the Eco function is on, the temperature of fridge is automatically switched to 43°F (6°C)and the temperature of freezer is automatically switched to 1°F (-17°C). When Eco function is on, you can switch it off by pressing the "MODE" button or adjusting the fridge/ freezer temperature, the refrigerator temperature setting will revert back to the previous setting.



"ICE"

The ice maker is located inside the freezer compartment, near the top of the compartment. When the ice maker makes ice, the ice is stored in freezer tray.

- Press the "ICE" button to turn the ice maker on or off. When the ice maker is turned on, the ""icon lights.
- To use ice, open the freezer compartment door, then pull open the freezer tray and get the ice.

POWER

Press and hold the "POWER" button for 3 seconds to turn the power function on or off. When the power function is on, the  icon lights and the display panel will show " -- ".

Note

When the power function is on, the refrigerator is stopped cooling.

Display controls

Demo mode

Demo mode is for store display, and it prevents the refrigerator from generating cool air. In this of Cooling off Mode, the refrigerator may seem like it is working but it will not make cool air. The display panel will show special segments as follow.



To switch off demo mode, press and hold "POWER" and "ICE"buttons at the same time for three seconds and the buzzer gave a long sound.

Door Open Alarm

If a door is open for longer than 2 minutes, an alarm will sound to alert you and the control panel will display "dr". The alarm will sound 3 times every minute for 8 minutes.
To turn off the alarm, close all doors completely.

Using your appliance

1. Using your refrigerator compartment

- The refrigerator compartment is suitable for storage of vegetables and fruit. Food inside should be packed to store in order to avoid losing moisture or flavor permeating into other foods.

Caution

Never close the refrigerator door while the shelves, crisper and/or telescopic slides are extended. It may damage both them and the refrigerator.

Glass shelves and Door bins

- The refrigerator compartment is provided with several glass shelves and six door bins, which are suitable for the storage of eggs, canned liquid, bottled drinks and packed food. They can be placed at different heights according to your need. But do not place too many heavy things in racks. Before you lift up the door shelf vertically, please take the food out.

Door Bins

To remove the door, simply lift the racks up and pull straight out. To relocate the door , slide it in above the desired location and push down until it stops.

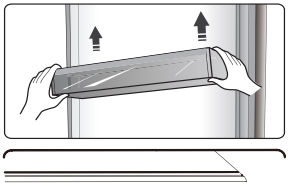

Adjustable Shelves

The height of the shelves can be adjusted to fit your storage needs.

To remove a shelf, gently lift upward and then pull the shelf forward until the end of the shelf is past the rail support.

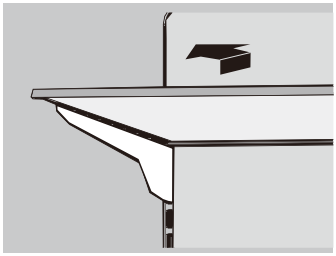

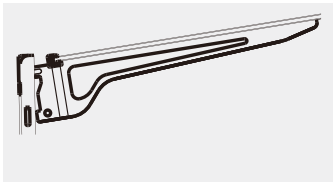

To reinstall a shelf, gently slide the shelf back into the refrigerator compartment, and the lower the shelf onto the rail support.

Note

The door bins and shelves can be taken out to be cleaned.

Opening and Closing Doors

The four doors can be opened and closed either separately or together.

- There is a mullion on the left-hand side refrigerator compartment door.
- When closing the left-hand door , the mullion folds behind the right-hand door joining the two doors.
- The temperature of the door frame is controlled to help prevent moisture from developing on the mullion. The temperature of the surface may be warm, which is normal, and will not affect the performance of the refrigerator.

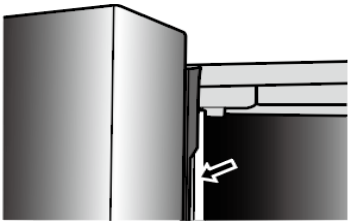

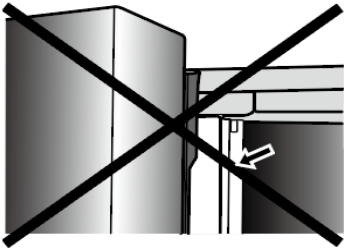

Note

Before closing the left-hand door, make sure the mullion is folded inward. If the mullion is pulled outward it may become damaged when you try to close the door.

2. Using your freezer compartment

- The freezer compartment is suitable for storage of foods required to be frozen, such as meat, fish, ice cream and other perishable items.
- Caution! Ensure that bottles are not left in the freezer for longer than needed as freezing may cause the bottle break. Bottled or canned liquid are at risk of exploding caused by volume expansion and so should not be stored in the freezer compartment.

Ice Maker in Freezer

If the water line is connected, set the ice maker power switch to the ON position.

- The ice maker will not begin to the operate until it reaches its operating temperature of 15°F(-9°C) or below. It will then begin operation automatically if the ice maker power switch is at the ON position.
- Following installation, allow 24 hours to produce the first batch of ice. Discard the first three batches of ice produced. Allow 2 to 3 days to fill the ice storage container.
- If the ice in the ice container clumps, break up ice using a plastic utensil and discard. Do not use a sharp tool to break up the ice. This can cause damage to the ice container.
- Do not store any items other than ice in the ice storage container.

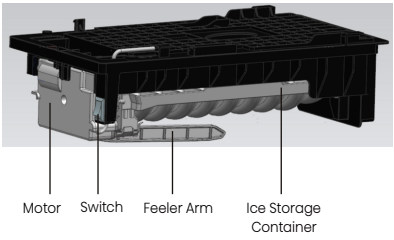

Caution

Do not allow children to touch the ice maker. This could cause injury.

Cleaning and care

For hygienic reasons the appliance (including exterior and interior accessories) should be cleaned at least every two months.

Warning

To avoid electrical shock, the appliance must not be connected to the main power supply during cleaning. Before cleaning, switch the appliance off and remove the plug from the main socket.

Exterior cleaning

To maintain good appearance of your appliance, you should clean it regularly.

- Wipe the digital panel and display panel with a clean, soft cloth.
- Spray water onto a cleaning cloth instead of spraying directly on the surface of the appliance. This helps ensure an even distribution of moisture to the surface.
- Clean the doors, handles and cabinet surfaces with a mild detergent and then wipe dry with a soft cloth.

Caution

- Don't use sharp objects to clean with, as they are likely to scratch the surface.
- Don't use thinner, car cleaner, bleach, oil, abrasive cleansers or organic solvent such as benzene for cleaning. They may damage the surface of the appliance and may cause fire.

Interior cleaning

You should clean the appliance interior regularly. It will be easier to clean when food stocks are low. Wipe the inside of the fridge and freezer with a weak solution of backing soda and water, and then rinse with warm water using a wrung-out sponge or cloth. Wipe completely dry before replacing the shelves and baskets. Thoroughly dry all surfaces and removable parts before putting them back into place.



Cleaning and care

Although this appliance automatically defrosts, a layer of frost may occur on the freezer compartment's interior walls if the freezer door is opened frequently or kept open too long. If the frost is too thick, choose a time when the freezer is nearly empty and proceed as follows:

1. Remove existing food and accessories baskets, unplug the appliance from the mains power and leave the doors open. Ventilate theroom thoroughly to accelerate theprocess.
2. When defrosting is completed, clean your freezer as described above.

Warning

- Do not use sharp objects to remove frost from the freezer compartment
- Only after the interior is completely dry should the appliance be switched back on and plugged back into the main socket.

Door seals cleaning

Take care to keep door seals clean. Sticky food and drinks can cause seals to stick to the cabinet and tear when you open the door. Wash seal with a mild detergent and warm water. Rinse and dry it thoroughly after cleaning.

Caution

Only after the door seals are completely dry should the appliance be powered on.

Warning

The LED light must be replaced by a competent person. If the LED light is damaged, follow the steps below:
1. Unplug your appliance.
2. Remove the light cover by lifting up and pulling out.
3. Hold the LED light with one hand and pull it while pressing the connector latch with the other hand.
4. Replace the LED light and snap it correctly in place and replace the light cover

Helpful hints and tips

Energy saving tips

We recommend that you follow the tips to save energy.

- Try to avoid keeping the door open for long periods in order to conserve energy.
- Ensure the appliance is away from any sources of heat (direct sunlight, electric oven or cooker etc.)
- Don't set the temperature colder than necessary, as it can reduce the energy efficiency of your refrigerator
- Don't store warm food or evaporating liquid in the appliance.
- Place the appliance in a well ventilated, humidity free room. Please refer to installing your new appliance chapter.
- The original placement of the internal shelves, door bins, and drawers in the appliance provides the optimal layout for energy efficiency.

Hints for fresh food refrigeration

- Do not place hot food directly into the refrigerator or freezer, the internal temperature will increase resulting in the compressor having to work harder and will consume more energy.
- Do cover or wrap the food, particularly if it has a strong flavor.
- Place food properly so that air can circulate freely around it.

Hints for refrigeration

- For all types of meat, it is recommended to pack or place them in containers to prevent freezer burn. Wrap and place on the glass shelf above the vegetable drawer. Always follow food storage times and use by dates suggested by manufacturers.
- Cooked food, cold dishes, etc:
  They should be covered and may be placed on any shelf.
- Fruit and vegetables:
  They should be stored in the special drawer provided.
- Butter and cheese:
  Should be wrapped in airtight foil or plastic film wrap.
- Milk bottles:
  Should have a lid and be stored in the door racks.

Hints for freezing

- After first starting up or following a period of inactivity, allow the appliance to run for at least 2 hours on the highest settings before placing food in the compartment.
- Prepare food in small portions to enable it to be rapidly and completely frozen and to make it possible to subsequently thaw only the quantity required.
- Wrap up the food in aluminum foil or polyethylene food wraps which are airtight.
- Do not allow fresh, unfrozen food to touch the food which is already frozen to avoid partial defrosting.

Helpful hints and tips

- It is recommended to label and date each frozen package in order to keep track of the storage time.

Hints for fresh food refrigeration

- Ensure that frozen food has been stored correctly by the food retailer .
- Once defrosted, food will deteriorate rapidly and should not be re-frozen.
- Do not exceed the storage period indicated by the food manufacturer.

Switching off your appliance

If the appliance needs to be switched off for an extended period, the following steps should be taken prevent mould on the appliance.
1. Remove all food.
2. Remove the power plug from the mains socket.
3. Clean and dry the interior thoroughly.
4. Ensure that all the doors are wedged open slightly to allow air to circulate.

Troubleshooting

If you experience a problem with your appliance or are concerned that the appliance is not functioning correctly, you can carry out some easy checks before calling for service, please see below.

⚠ WARNING

- Don't try to repair the appliance yourself. If the problem persists after you have made the checks mentioned below, contact a qualified electrician, authorized service engineer or the shop where you purchased the product.

Problem	Possible cause & Solution
Appliance is not working correctly	• Check whether the power cord is plugged into the power outlet properly.
	• Check the fuse or circuit of your power supply, replace if necessary.
	• The ambient temperature is too low. Try setting the chamber temperature to a colder level to solve this problem.
	• It is normal that the refrigerator is not operating during the automatic defrost cycle, or for a short time after the appliance is switched on to protect the compressor.
Odours from the compartments	• The interior may need to be cleaned. Some food, containers or wrapping cause odours.
Noise from the appliance	• The sounds below are quite normal: Compressor running noises. Air movement noise from the small fan motor in the freezer compartment or other compartments. Gurgling sound similar to water boiling. Popping noise during automatic defrosting. Clicking noise before the compressor starts.
	Other unusual noises are due to the reasons below and may need you to check and take action: • The cabinet is not level.

Troubleshooting

Problem	Possible cause & Solution
Noise from the appliance	• The back of appliance touches the wall. • Bottles or containers fallen or rolling.
The motor runs continuously	It is normal to frequently hear the sound of the motor, it will need to run more when in following circumstances: • Temperature setting is set colder than necessary. • Large quantity of warm food has recently been stored within the appliance. • The temperature outside the appliance is too high. • Doors are kept open too long or too often. • After your installing the appliance or it has been switched off for a long time.
A layer of frost occurs in the compartment	• Check that the air outlets are not blocked by food and ensure food is placed within the appliance to allow sufficient ventilation. • Ensure that the door can be fully closed . To remove the frost, please refer to the “Cleaning and care” chapter.
Temperature inside is too warm	• You may have left the doors open too long or too frequently; or the doors are kept open by some obstacle; or the appliance is located with insufficient clearance at the sides, back and top.
Temperature inside is too cold	• Increase the temperature by following the “Display controls” chapter.
Doors can’t be closed easily	• Check whether the top of the refrigerator is tilted back by 10-15mm to allow the doors to self close, or if something inside is preventing the doors from closing.

Troubleshooting

Problem	Possible cause & Solution
Hear water bubbling in the refrigerator	• This is normal. The bubbling comes from the refrigerant coolant liquid circulating through the refrigerator.
The light is not working	• The LED light may be damaged. Refer to replace LED lights in cleaning and care chapter. • The control system has disabled the lights due to the door being kept open too long, close and reopen the door to reactivate the lights.
Ice is not making	• Did you wait for 24 hours after installation of the water supply line before making ice? If it is not sufficiently cool, it may take longer to make ice, such as when first installed. • Is the water line connected and the water valve open?Did you manually stop the ice making function? • Is there any ice blocked within the ice maker bucket? • Is the water pressure less than 30psi? Install a booster pump to compensate for the low pressure. • Is the freezer temperature too warm? Try setting the freezer temperature lower. • Ice maker is not making the ice fast enough. Please wait for at least 90 minutes. • Remove the bucket and check if the ice clums or sticks to the wall, break up ice using a plastic utensit and discard.
You can hear water bubbling in the refrigerator	• This is normal. The bubbling comes from the refrigerant coolant liquid circulating through the refrigerator.

Disposal of the appliance

It is prohibited to dispose of this appliance as household waste.

Packaging materials

Packaging materials with the recycle symbol are recyclable. Dispose of the packaging into a suitable waste collection container to recycle it.

Before disposal of the appliance

1. Pull out the mains plug from the mains socket.
2. Cut off the power cord and discard with the mains plug.

DANGER

Risk of child entrapment. Before you throw away your old refrigerator or freezer:
-Take off the doors.
-Leave the shelves in place so that children may not easily climb inside.

WARNING

- Refrigerators contain refrigerant and gases in the insulation. Refrigerant and gases must be disposed of professionally as they may cause eye injuries or ignition. Ensure that tubing of the refrigerant circuit is not damage prior to proper disposal.

	Correct Disposal of this product
	This marking indicates that this product should not be disposed with other household wastes throughout the EU. To prevent possible harm to the environment or human health from uncontrolled waste disposal, recycle it responsibly to promote the sustainable reuse of material resources. To return your used device, please use the return and collection systems or contact the retailer where the product was purchased. They can take this product for environmental safe recycling.

One Year Limited Warranty

Manufacturer provides a limited warranty for each new refrigerator to be free from defects in material and workmanship for a period of 1 year from the date of purchase. Manufacturer agrees to remedy any such defective inside accessory components such as door panels, door shelves, racks, handles, casters, bins and drawers or to furnish a new unit if the unit proves to have failed, at the company's option, for one year from your original date of purchase.

In the event the unit requires replacement or refund under the terms of this limited warranty, the Buyer is responsible for all transportation expenses to return the unit prior to receiving a replacement unit or refund. A copy of the dated sales receipt/invoice is required to receive benefits of this limited warranty.

This limited warranty covers appliances in use within the continental United States, Alaska, and Hawaii, and Puerto Rico.

This limited warranty does not cover the following:

1. Products with original serial numbers that have been removed, altered or cannot be readily determined.
2. Products that have been transferred from its original owner to another party or removed outside the USA.
3. Rust on the interior or exterior of the unit.
4. Damages due to shipping damage or improper installation.
5. Damages due to misuse or abuse.
6. Service calls, repairs, and labor expenses for any purpose.
7. Content losses and food spoilage due to failure of the unit.
8. Punctures to the evaporation system due to improper defrosting of the unit.
9. Replacement or resetting of house fuses or circuit breakers.
10. Failure or defects of this product if used for other purposes than its intended purpose or used other than in accordance with the provided instructions.
11. Disposal costs for failed unit not returned to Manufacturer.
12. Any delivery/installation costs incurred as the result of a unit that fails to perform as specified.
13. Expenses for travel and transportation for product if you are exchanging or returning the unit.
14. Expenses related to the removal and re-installation of your unit or for making the unit accessible, such as removal of trim, cupboards, shelves, etc. or if not installed in accordance with the provided installation instructions.
15. Damages to the finish of the unit or home incurred during installation, including but not limited to floors, cabinets, walls, etc.
16. Damages caused by external causes such as abuse, misuse, inadequate power supply, accidents, fires, or acts of God.
17. Refunds for returned products are limited to the price paid for the unit per the sales receipt.

Disclaimer of Implied Warranties, Limitation of Remedies and Exclusions:

EXCEPT FOR THE EXPRESS WARRANTIES SET FORTH HEREIN, MANUFACTURER MAKES NO WARRANTY WHATSOEVER (OR THE SHORTEST PERIOD ALLOWED BY LAW) REGARDING THE GOODS, INCLUDING ANY (1) WARRANTY OF MERCHANTABILITY; (2) WARRANTY OF FITNESS FOR A PARTICULAR PURPOSE; (3) WARRANTY OF TITLE; OR (4) WARRANTY AGAINST INFRINGEMENT OF INTELLECTUAL PROPERTY RIGHTS OF A THIRD PARTY; WHETHER ARISING BY LAW, COURSE OF DEALING, COURSE OF PERFORMANCE, USAGE OF TRADE, OR OTHERWISE. BUYER ACKNOWLEDGES THAT IT HAS NOT RELIED ON ANY REPRESENTATION OR WARRANTY MADE BY MANUFACTURER, OR ANY OTHER PERSON ON MANUFACTURER'S BEHALF. REPLACEMENT OF UNIT AND LISTED PARTS IN ACCORDANCE WITH THE TERMS HEREIN, IS YOUR SOLE AND EXCLUSIVE REMEDY UNDER THIS LIMITED WARRANTY. MANUFACTURER IS NOT LIABLE FOR INCIDENTAL OR CONSEQUENTIAL DAMAGES AND NO REPRESENTATIVE OR PERSON IS AUTHORIZED TO ASSUME FOR MANUFACTURER ANY OTHER LIABILITY IN CONNECTION WITH THE SALE OF THIS PRODUCT. UNDER NO CIRCUMSTANCE IS THE CONSUMER PERMITTED TO RETURN THE UNIT TO MANUFACTURER WITHOUT THE PRIOR WRITTEN CONSENT OF MANUFACTURER.

Customer Service, (toll free: 888-411-7118) between the hours of 9:00 am and 6:00 pm EST
EMAIL: Criterion@hisense.com

⚠ **A CALIFORNIA RESIDENTS ONLY-WARNING:** Cancer and Reproductive Harm-www.P65Warnings.ca.gov

Customer Service, (toll free: 888-411-7118) between the hours of 9:00 am and 6:00 pm EST
EMAIL: Criterion@hisense.com