TRICITY BENDIX

OPERATING & INSTALLATION INSTRUCTIONS

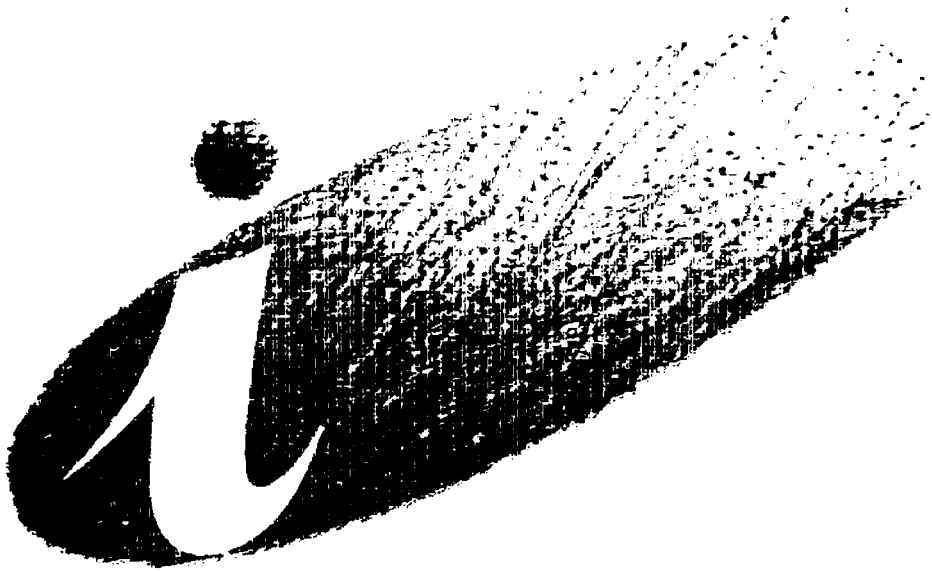

FRIDGE FREEZER

ECD019 / FD930

Download from Www.Somanuals.com. All Manuals Search And Download.

IMPORTANT USER INFORMATION

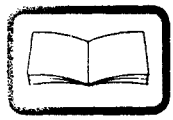

IMPORTANT

PLEASE READ THIS INSTRUCTION BOOK BEFORE USING THE APPLIANCE

- Please ensure that you have read the whole instruction book before using the appliance. These warnings are provided in the interest of safety. You must read them carefully before installing or using the appliance.
  It is important that this instruction book should be retained with the appliance for future reference. Should the appliance be sold or transferred to another owner, or should you move house and leave the appliance, always ensure that the book is supplied with the appliance in order that the new owner can be acquainted with the functioning of the appliance and the relevant warnings.

- Any electrical work required to install this appliance should be carried out by a qualified electrician or competent person. Under no circumstances should you attempt to repair the appliance yourself. Repairs carried out by inexperienced persons may cause injury or more serious malfunctioning. This product should be serviced by an authorised service engineer and only genuine Tricity Bendix Spare Parts should be used.

- It is dangerous to alter the specifications or modify this product in any way. This product is designed for domestic use only and should be operated by adults. Children should not be allowed to tamper with the controls or play with the product.

- The appliance should be left for 2 hours after installation before it is turned on to allow the refrigerant to settle. Care must be taken to ensure that the appliance does not stand on the electrical supply cable.

- Many parts at the back of this appliance heat up and should not be exposed. When positioning this appliance ensure there is adequate ventilation. Failure to do this will result in component failure and possible food loss.
  This appliance is heavy. Care should be taken when moving it.

- Tricity Bendix fridge freezers are designed to be used specifically for the storage of edible food stuffs only. Food manufacturers storage recommendations should be strictly adhered to. Refer to relevant instructions.

- The aluminium lining or refrigerated shelves in this appliance contain channels through which the refrigerant passes. If these are punctured this would cause substantial damage to the appliance and result in food loss. Do not use sharp instruments to scrape off frost or ice. Under no circumstances should solid ice be forced off the lining. Solid ice should be allowed to thaw when defrosting the appliance.

- Care must always be taken when handling food in the home. Always follow the basic rules of food hygiene to prevent bacterial and microbial growth and cross contamination when defrosting, preparing, cooking, cooling, reheating and freezing foods.

- Before defrosting, cleaning or maintenance work is carried out, be sure to switch off the appliance and unplug it.

- Your fridge freezers are designed for operation in a domestic household. If it is used in a non-domestic situation the guarantee may be invalidated.

Download from Www.Somanuals.com. All Manuals Search And Download.

CONTENTS

	Page
Important User Information	1
Your Appliance	3
How to Install your Appliance (Before using your appliance)	4
Adjustment of Door	6
Reversible Hinging	7
Decor Kits	9
How to Use the Temperature Control Dial	10
How to Use your Appliance	11
How to Use the Fast - Freeze Facility	11
Your Larder Compartment	12
Fresh Food Compartment	12
Door Storage	12
PreparingFoods for Storage	13
Fresh Food Storage Guide	13
Defrosting your Larder Refrigerator	14
Replacement of Interior Light Bulb	14
Your Freezer	15
Frozen Food Storage	15
Freezing Fresh Food	16
General Preparation	17
Ice Making	17
Prepared Foods	17
Thawing Food	19
Food Freezing Guide	20
Complete Defrosting of Freezer Compartment	23
Cleaning & Care	24
Something Not Working (service check)	25
Rating Plate	25
Help us to Help You	26
Tricity Bendix Service Centres	27
Guarantee	28

Download from Www.Somanuals.com. All Manuals Search And Download.

YOUR APPLIANCE

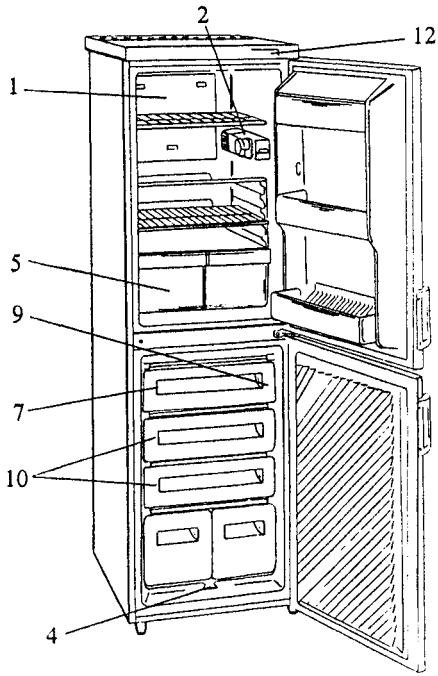

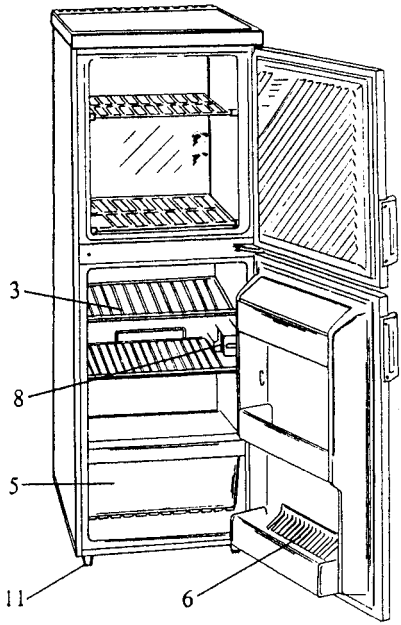

YOUR APPLIANCE WILL BE FITTED WITH SOME OF THE ABOVE COMPONENTS:

1.	Fridge Cooling Plate
2.	Fridge Thermostat Control and interior Light Switch
3.	Adjustable Shelf
4.	Spout Area
5.	Salad Drawer
6.	Bottle Gripper
7.	Fast Freeze Compartment
8.	Fridge/Freezer Thermostat Control
9.	Fast Freeze Switch
10.	Freezer Basket
11.	Level Adjusters (in 4 feet)
12.	Warning Lights

FOR BEST RESULTS, IT IS IMPORTANT THAT YOU READ ALL THE CONTENTS OF THIS HANDBOOK BEFORE YOU USE YOUR FRIDGE/FREEZER.

Download from Www.Somanuals.com. All Manuals Search And Download.

HOW TO INSTALL YOUR APPLIANCE

1. This appliance is designed to operate in ambient temperatures between 10°C (50°F) and 32°C (89.6°F). It should be located in a dry atmosphere, out of direct sunlight and away from extreme temperature e.g. not next to a cooker or other sources of direct heat, or in a very cold room e.g. an outhouse, where the temperatures may fall below 10°C (50°F). If these ambient temperatues are exceeded the food storage temperatures given on page 10 will not be maintained.

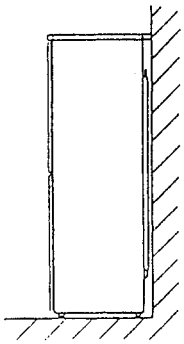

Fig 2.

2. The appliance should be gently pushed into place until the table top rear ventilation grill touches against the wall. (See Fig.2) When in position a 20mm (3/4") clear space above the appliance should be maintained. If a clear space of 20mm (3/4") above the apppliance is not available, clearances of 25mm (1") should be maintained on both sides.

3. Your appliance will be heavy when loaded with food and must therefore be stood on a strong firm floor. It should also be level. Adjust the level by screwing out the appropriate level adjusters in the front feet using your fingers or a 25mm (1") spanner (see fig.5). Level adjusters are also available in the rear feet in the event of excessive floor unevenness.
Make sure the appliance is upright and all adjusters are in firm contact with the floor so that the cabinet doesn't rock in any direction.
Fig. 5.

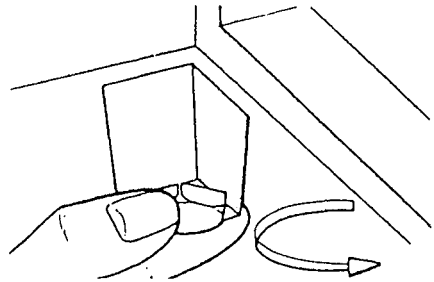

4. Before switching on, make sure that the voltage of your electricity supply is the same as that indicated on the rating plate. This is located inside the cabinet behind the salad drawer or freezer bin.

WARNING

THIS APPLIANCE MUST BE EARTHED.

5. If this appliance is fitted with a non rewireable plug for which your socket is unsuitable the plug should be cut off and an appropriate plug fitted. The removed plug should be disposed of as insertion of the plug into a 13A socket is likely to cause an electrical hazard. If it is necessary to change the fuse in a non rewireable plug the fuse cover must be replaced. If the fuse cover is lost or damaged the plug must not be used until a replacement is obtained.
Replacement fuse covers are available from your nearest customer service centre. It is important that the colour of the replacement fuse cover corresponds with the colour insert as embossed in words on the base of the plug.

Download from Www.Somanuals.com. All Manuals Search And Download.

IMPORTANT

6. The wires in the mains lead are coloured in accordance with the following code.

GREEN & YELLOW	:EARTH
BLUE	:NEUTRAL
BROWN	:LIVE

As the colours of the wires in the mains lead of this appliance may not correspond with the coloured markings identifying the terminals in your plug, proceed as follows:

The wire which is coloured green and yellow must be connected to the terminal which is marked with the letter 'E' or by the Earth Symbol ⏚ or colour Green or Green-Yellow. The wire which is coloured Blue must be connected to the terminal which is marked with the letter 'N' or coloured black. The wire which is coloured Brown must be connected to the terminal which is marked 'L' or coloured Red.

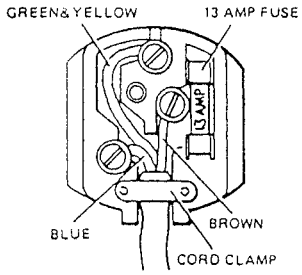

7. The appliance must be protected by a 13A ASTA approved (BS1362) fuse, if a 13A (BS1363) plug or a non rewireable plug is used, or if any other type of plug is used by a 15A fuse either in the plug or adaptor or at the Distribution Board.

8. If at any time a replacement lead is required, the cross sectional area of its conductors must not be less than 0.75mm.

9. If it becomes necessary to replace the supply cord, the cable clamp should be tightened so as to retain the new cord.

10. We recommend that the installation be checked by a qualified electrician who can ensure that the appliance is operating satisfactorily and that it has not been damaged in transit.

11. At first you may be aware of sounds in your kitchen which you are not used to, particularly if your appliance is against sound-reflective surfaces such as tiled or painted walls. Please remember the cooling unit includes precision built components which, like those in car engines and other machinery with fast moving parts, need a running in period which may last for several weeks. During this period, don't worry, just allow the appliance time to settle down.

BEFORE USING YOUR APPLIANCE

Wash the interior of the appliance using a solution of 5ml (1 teaspoonful) of bicarbonate of soda to each 500ml (1 pint) of warm water and dry very thoroughly with a clean dry cloth.

Detergents or soap should not be used as they leave a trace of odour. Abrasive cleaning powders must not be used on any interior part as they may effect the finish.

Download from Www.Somanuals.com. All Manuals Search And Download.

ADJUSTMENT OF DOOR

Before carrying out the following instruction **ensure that the appliance is switched off at the electricity supply.**

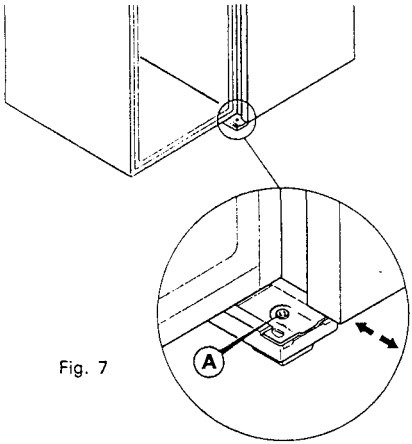

Fig. 7

Occasionally door adjustment may be necessary i.e. if a slight clearance is noticeable between the door gasket and cabinet. This condition is mainly due to uneven floors or the loading of the door. It is possible to adjust the doors at the hinge points as follows: (see fig. 7).

1. With the appliance standing on a level surface, check that the door opens and closes properly and seals all round.
2. If adjustment of the door is necessary this can be done by loosening the screw (A) securing the hinge blade to the foot and adjusting the hinge blade and door in and out, a little at a time, to tighten or loosen the fit. Retighten the screw each time an adjustment has been made before again checking for satisfactory door closure.

Download from Www.Somanuals.com. All Manuals Search And Download.

REVERSIBLE HINGING

1. If your appliance is already in use **disconnect it from the electricity supply.** Remove shelves and other loose items including food. Store food in a cool place.

Fig. 8

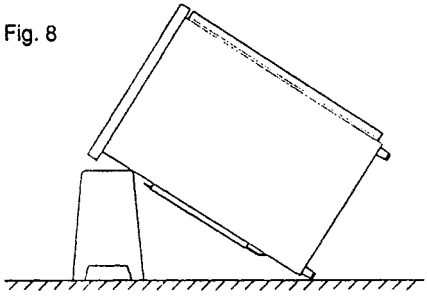

2. Gently lay the appliance on its back with the top held away from the floor by at least 30cm (12") (use a stool or something similar). Make sure to use a towel or cloth at the base of the product to protect the sides of the fridge ensuring the product does not slip. Do not support the appliance on the rear ventilation grill (see fig. 8 for correct positioning). Remove level adjuster (1) from the small foot assembly. The small foot (2) can now be removed by removing screw (3). In order to remove the large foot/hinge assembly (7) screws (4 & 5) should be removed making sure that spacer (6) is retained with the assembly (see fig.9).

Fig. i

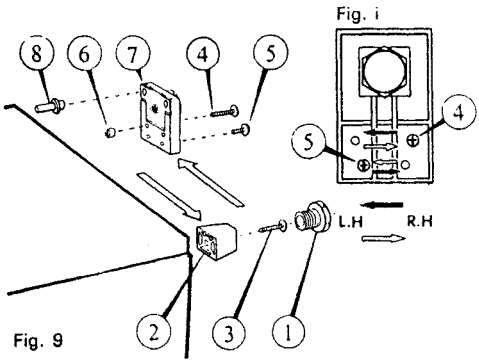

Fig. 9

3. Remove the bottom door by lifting it slightly and carefully sliding it down off the centre hinge (9) (fig. 10). Remove centre hinge and washers (where fitted) by taking out the two securing screws (10). Access to the outer screw can be gained by inserting a screwdriver through the hole in the body of the hinge after removing the plastic cap (11.) Pull the hinge down out of the top door. The top door can then be removed by carefully sliding it down off the upper hinge pin. Remove the blanking plate (12) if fitted by taking out 2 screws (13). Refit the plate and screws on the opposite side.

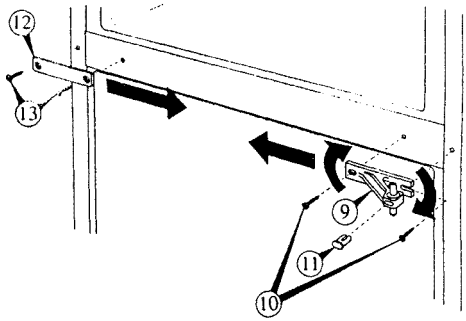

Fig. 10

Download from Www.Somanuals.com. All Manuals Search And Download.

4. Unscrew the upper hinge pin (14) and transfer it to the opposite side. (see fig.11)

Fig. 11

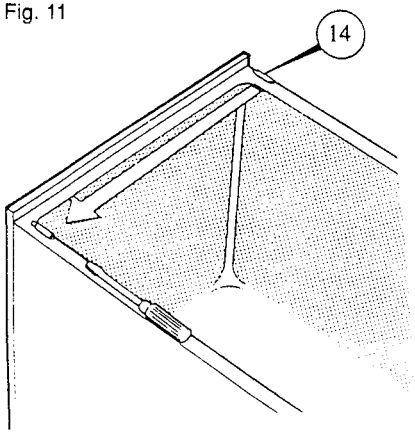

5. Re-fit the top door by carefully sliding it onto the upper hinge pin.

6. Turn the centre hinge (9) around from its illustrated position and transfer to the opposite side. To secure the centre hinge, gently press up into top door re-fit any spacing washer(s) on the top side of the hinge, to position top door at correct height). Re-fit the two screws (10) to secure centre hinge to cabinet. Ensure top door is correctly aligned before fully tightening the two screws. This can be achieved by sideways movement of the centre hinge.

7. Refit the bottom door by carefully sliding it onto the centre hinge pin.

8. Pull out the lower hinge pin (8) which may have come away with the hinge blade or remained in the door. Push the pin (rounded end) into the bush at the bottom of the door on the side opposite to its original position.

9. Taking care not to press down on the door. The large foot/hinge assembly should be transferred over to the opposite side of the cabinet and screws 4 and 5 moved over to their new positions in the hinge foot (see fig. i).

It is important that the spacer (6) is retained with screw (4) in the channel between the base of the product and the foot/hinge assembly when screwing the foot/hinge assembly into its new position.

10. Refit the small foot, positioning the screw in the hole furthest from the cabinet front on the flat portion of the base.

11. Replace the level adjuster (1) in the small foot.

12. Stand the appliance upright.

13. If your appliance has a side fix handle (see fig. 12)

i) Protect the paintwork from damage with masking tape or other suitable material between the blade and painted surface, while using a blunt knife or similar instrument to carefully prise out the plastic plugs from alternative handle positions on the opposite side of the door.

ii) Transfer the handle to its new position and push the plastic plugs into the vacated screw holes.

Download from Www.Somanuals.com. All Manuals Search And Download.

Fig. 12

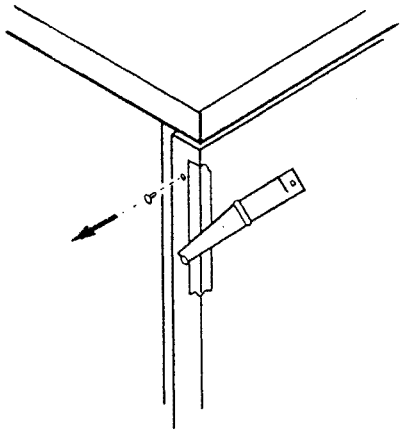

14. Finally, level the appliance by means of the level adjusters (1) in the feet - see installation of appliance (page 4).

15. Switch on the appliance and replace the food.

DECOR KITS

A door panel decor kit is available for this appliance. The decor kit can accommodate a panel thickness of up to 5mm thick. The kit and relevant instructions are available from your place of purchase.

Download from Www.Somanuals.com. All Manuals Search And Download.

HOW TO USE THE TEMPERATURE CONTROL DIAL

LARDER COMPARTMENT

1. The interior temperature of the larder compartment is automatically controlled by the thermostat. The control dial enables the desired degree of cooling to be selected. The control dial is numbered ● - 6. On setting ● the cooling system is switched off but the appliance is not disconnected from the electrical supply. The highest number is the coldest setting. (see fig.13)
The recommended setting is 4 to 5 for models FD930W, FD930AL, CPD9W, CPD9AL, EBD9W, EBD9AL.
The recommended setting is 4 for models FD800W, FD800AL, CPD8W, CPD8AL, EBD8W, EBD8AL and the thermostat control is situated in the larder box which also automatically controls the freezer temperature.

Fig. 13

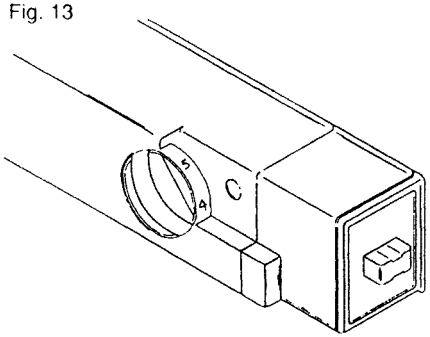

2. If colder settings are selected for extra chilling effect, do not forget to turn the control dial back to the correct setting afterwards. The larder contents may freeze if cooler temperatures are maintained for any length of time. Operating the larder at colder temperatures than necessary only consumes excessive power and hence increases running costs.

3. The choice of setting may be influenced by the frequency of door openings, the quantity of food stored, the kitchen temperature and location of the appliance. During warm weather a higher setting may be required.

FREEZER COMPARTMENT

1. The interior temperature of the freezer compartment is automatically controlled by its thermostat. The freezer is designed to produce a storage temperature of - 18°C (-0.4°F) or colder. The control dial is numbered ● - 6. The higher the number the colder the temperature. (see fig.13).
The recommended setting is 4 to 5 for models FD930W, FD930AL, CPD9W, CPD9AL, EBD9W, EBD9AL.
And on models FD800W, FD800AL, CPD8W, CPD8AL, EBD8W, EBD8AL. The freezer temperature is controlled automatically by the thermostat situated in the larder compartment. See note 1.

2. Due to the different installations, methods of usage and weather conditions, adjustments to the temperature setting may be required. These are best assessed against a temperature reading on a thermometer buried in the frozen food or in a block of margarine or butter. Remember you must take your reading very quickly since the thermometer temperature will rise rapidly after you remove it.

3. If colder settings are selected for extra chilling effect, do not forget to turn the control dial back to the correct setting afterwards.

Download from Www.Somanuals.com. All Manuals Search And Download.

HOW TO USE YOUR APPLIANCE

OPERATION

Your freezer compartment may be fitted with:

Type A Models (Models CPD9W, CPD9AL).

It's own thermostat and control dial.

Type B Models (Models EBD9W, EBD9AL).

Its own thermostat and control dial with slider switch in table top surround front. (See Fig.14)

Fig. 14

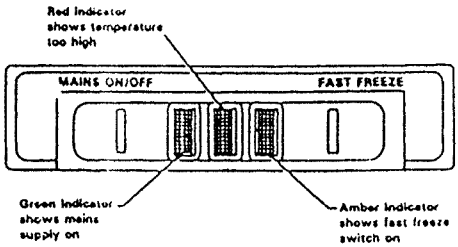

Type C Models (Models FD930W, FD930AL). Its own thermostat with control dial and internal fast freeze switch and warning lights in top surround. (See Fig. 15)

Fig. 15

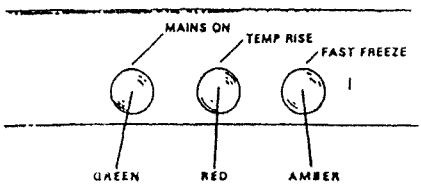

Type D Models (Models FD800W, FD800AL, CPD8W, CPD8AL, EBD8W, EBD8AL). No separate thermostat - automatically controlled by refrigerator thermostat.

WARNING LIGHTS

Green Indicator Light
When the appliance is switched on at the mains (and also the mains on/off switch type B) the green indicator light will glow and continue to glow until the appliance is switched off.

Red Indicator Light
This centre neon is the temperature warning light, it will glow immediately the electricity supply is switched on or when the cabinet temperature rises above the required storage temperature. It will cease to glow only when the cabinet temperature falls to the required storage level.

Amber Indicator Light (Fast Freeze)
This right hand neon is incorporated with the fast freeze switch which overrides the thermostat when switched on. This allows the freezer to run continuously. The light will stay on until the fast freeze switch is turned off.

HOW TO USE THE FAST-FREEZE FACILITY TYPE B & C MODELS ONLY

Switch on at the mains (and also the mains on/off switch type B) and set the control dial to the normal operational setting.

Operate the fast freeze switch in the thermostat housing type (C) models or with the slider switch type (B).

When the red temperatue warning light ceases to glow, switch off the fast freeze switch. The freezer is now ready to be used for frozen food storage.

If during normal operation the control setting is increased the red temperature warning light may glow, this should be ignored as it will cease to glow when the freezer has reached its new temperature.

Download from Www.Somanuals.com. All Manuals Search And Download.

YOUR LARDER COMPARTMENT

TEMPERATURES

1. The function of the larder compartment is to reduce the development of organisms which cause decay and bacterial activity, and thus increase the storage life of food.
2. The fresh food compartment has been designed to operate between O°C (32°F) and 5°C (41°F) and is in accordance with British and European Standards.

FRESH FOOD COMPARTMENT

1. The larder compartment is fitted with shelves which are adjustable for the storage of different sized articles and may also be tilted for the storage of bottles of wine etc. (see fig. 16)

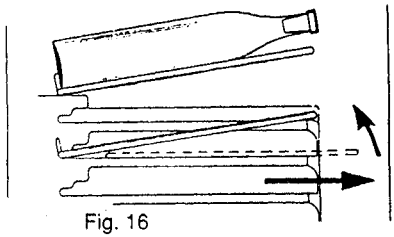

Fig. 16

If your larder refrigerator is positioned near to a wall thereby allowing the door to open through only 90° then each shelf when tilted can be removed as follows (see fig. 17)

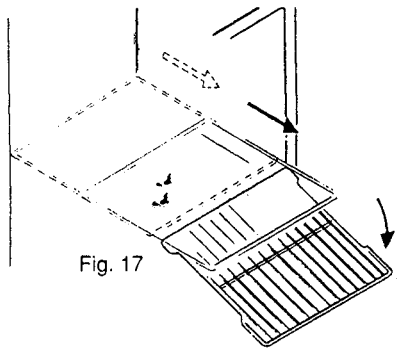

Fig. 17

The shelves are designed to allow maximum air circulation and therefore when placing foods on the shelves make sure a small space is left between the packages.
2. The warmest area in the refrigerator is to the top of the compartment and the coolest is at the bottom of the compartment and this is where the most perishable foods should be kept.
3. Vegetables and salad foods can be stored in the salad drawer with shelf. To ensure they are maintained in a crisp condition it may be necessary to wrap some foods in polythene bags e.g. lettuce, watercress or herbs.

DOOR STORAGE

1 Storing items in the door liner can eliminate searching in the main compartment. The lower door shelf should be used for the storage of heavier bottles whilst remaining shelves will accommodate fat, butter, small cartons and jars etc.
2. Adjustment of the door shelves can be made to accommodate varying heights of bottles and other containers (see fig. 18)
3. Enclosed storage compartments may be used to store dairy products and fats.

Fig. 18

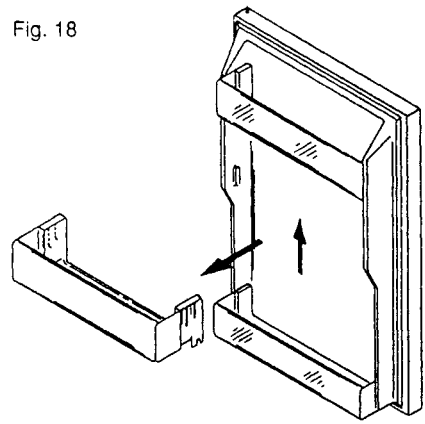

Download from Www.Somanuals.com. All Manuals Search And Download.

HELPFUL HINTS WHEN BUYING FOODS

1. Always ensure that food you purchase is of good quality and in prime condition.
2. Shop at a reliable source and buy the "freshest" looking packing - avoid shop-worn labels or produce covered in dust.
3. Avoid buying chilled food if you cannot store it straight away. The use of an insulated container is advisable.
4. Buy and consume foods prior to the "Sell By" or "Best Before" dates.
5. When you arrive home place perishable foods in the refrigerator immediately.
6. Always follow the storage instructions recommended by the manufacturer on the packet.

PREPARING FOODS FOR STORAGE

1. Wash and dry soiled vegetables and fruit before storage. All vegetables and fruit should be washed before eating.
2. Foods should be covered before being placed in the refrigerator. Foil, plastic film, polythene and plastic food containers are suitable.

   Covering foods not only prevents transfer of flavours and foods from drying out, but also prevents any possible cross contamination with bacteria from raw to cooked foods. The position or storage of food in a refrigerator should be carefully selected so that cross contamination will not occur.
3. Different types of food such as raw meat, fish, dairy products and cooked food should be kept separately to avoid contamination from one another. Cooked foods should always be placed above raw meats.
4. Put fresh meat and defrosting foods on a plate, covered, at the bottom of the fridge - if it drips onto other foods it can pass on food poisoning bacteria. Do not let meat drip into fresh vegetables and salads in the salad drawer.
5. With ready packed and prepacked foods always check the label to see if the manufacturer has given any storage advice and follow accordingly. Many foods now have preservatives and antitoxins removed and this will reduce the shelf life of certain foods.
6. Hot food should not be put straight into the refrigerator because it can cause intensive work for the compressor and thus increase the energy consumption, and therefore it is important to cool cooked food quickly before putting it into the refrigerator.

   Food should be cooled quickly to prevent bacterial growth and this may be done by transferring hot foods into a cold container and standing it in a sink filled with iced water. Ensure that the food is covered and stir at regular intervals to reduce the temperature quickly.

NEVER PUT HOT FOODS DIRECTLY INTO THE REFRIGERATOR.

FRESH FOOD STORAGE GUIDE

The recommended storage times of food are as follows:

Shelf Position	Storage Time
Top Shelves	
Fats	10 days
Hard Cheese	7-14 days
Cooked Meats, Poultry	2 days
Bacon	7 days
Middle Shelves	
Milk and Cream	2-3 days
Soft Cheese	2-3 days
Eggs	2 weeks
Desserts with cream/ custard	2 days

Download from Www.Somanuals.com. All Manuals Search And Download.

Shelf Position	Storage Time
Middle Shelves	
Pastry products	3-4 days
cooked Meat Pies/	
Sausage Rolls	2 days
Cooked Fruit	up to 4 days
Bottom Shelves	
Stock and Gravies	up to 4 days
Fresh Fish	eat same day
Fresh Meats	3 days
Fresh Poultry	2 days
Sausages	up to 3 days
Minced Meat, Burgers	1 day
Salad Drawer	
Green Vegetables	3-5 days
Salad Vegetables	3-5 days
Fresh Fruit	5 days

DO NOT KEEP BANANAS IN THE REFRIGERATOR.

DEFROSTING YOUR LARDER REFRIGERATOR

The defrosting of the larder compartment occurs automatically. There is a drain outlet situated at the back of the compartment, as indicated by a label on the inside wall. This drain outlet should be cleaned at regular intervals.

IT IS IMPORTANT THAT THE DRAIN OUTLET IS KEPT CLEAR AT ALL TIMES, IF BLOCKED CAREFULLY CLEAR IT USING A PIECE OF FLEXIBLE CURTAIN WIRE INSERTED INTO THE DRAIN OUTLET TO REMOVE BLOCKAGE.

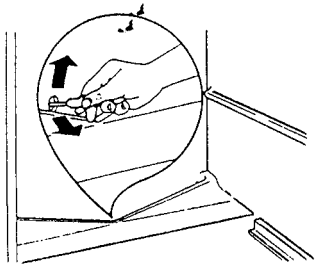

REPLACEMENT OF INTERIOR LIGHT BULB

1. Should the interior light fail to work, **first switch off and pull out the mains plug,** and then replace the bulb as follows: (see fig.19)

fig. 19

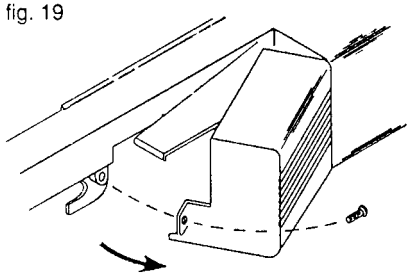

2. Remove the light cover by removing the screw at the rear with a screwdriver and pulling the rear outwards towards the middle of the cabinet. Unscrew the bulb and replace it with a new 15 watt E14 SES bulb (available from your nearest Tricity Bendix Service Centre).
3. Replace the cover by engaging its front edge in the recess in the light housing, push the rear towards the side of the cabinet and replace the screw (see below)

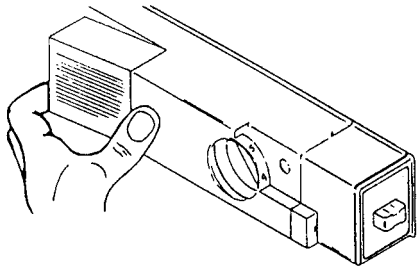

Download from Www.Somanuals.com. All Manuals Search And Download.

YOUR FREEZER

The ✱✱✱ symbol means that your freezer will store frozen food at - 18° C (-0.4° F) for long term storage and will also freeze fresh food.

It will store food at a temperature that is too cold for bacterial and enzyme activity which causes decay, thus increasing the storage life. If frozen correctly, food will retain texture, colour, taste and nutritional content.

Most fresh foods freeze well, however some freeze more successfully than others. foods with a low proportion of water such as bread, cakes, pastry meat, fish and poultry freeze exceptionally well.
Similarly, game, dairy produce, fruits and vegetables all keep well in the freezer.

Foods with a high water content such as lettuce or marrow do not freeze well as the freezing process breaks down their cellular structure. Other foods which do not freeze well are mayonnaise because it separates, bananas because they turn black and whole eggs in their shells because they crack.

HELPFUL HINTS WHEN BUYING FOOD

1. Always ensure that fresh food you purchase is of a good quality and in prime condition.

2. Shop at a reliable source and buy the "freshest" looking packages - avoid shopworn labels or produce covered in dust.

3. Avoid buying frozen food if you cannot store it straight away. The use of an insulated container is advisable. When you arrive home place frozen foods in the freezer immediately.

FROZEN FOOD STORAGE

Your appliance has the following freezing capabilities.
Models FD930W, FD930AL, CPD9W, CPD9AL, EBD9W, EBD9AL,net storage volume 75.81 litres (2.68 cuft) * weight of stored food 24.3kg (53.57 lb)
Models FD 800W, FD800AL, CPD8W, CPD8AL, EBD8W, EBD8AL, net storage volume 77.6 litres (2.74 cuft) * weight of stored food 24.8 kg (54.8 lb).

* This is a standard measurement and the actual capacity depends upon the density and sizes of the food. The above figures are based on an average density of 0.32kg per .litre (20lb. per cuft).

2. Pre-packed commercially frozen food should be stored in accordance with the manufacturers' instructions for a 3 star frozen food compartment and should be put in the freezer as soon as possible after purchase. Your freezer provides for long term storage which generally means up to 3 months but the length of storage time can vary and it is important to follow the recommended times shown on packets of commercially frozen food.

3. Storage time for home prepared fresh foods are given on pages 20 - 22.

4. Any opened packets of frozen foods should be rewrapped in air tight materials to prevent surface evaporation which causes drying or "freezer burn".

Download from Www.Somanuals.com. All Manuals Search And Download.

IMPORTANT

If the temperature rises in frozen foods because of:

a) non compliance with manufactuers instruction.

b) electric power failure.

c) due to defrosting.

then recommended storage life may be reduced and storage times may not apply.

Frozen food which is allowed to thaw accidentally should either be used immediately or thrown away.
Alternatively if the food is uncooked and it has not been completely defrosted it can be cooked then refrozen.

NOTES:

1. Do not place sealed containers of carbonated liquids such as fizzy drinks into the freezer as it creates pressure on the container which may cause it to explode resulting in damage to the freezer.

2. Water ices and ice lollies should not be consumed immediately after removal from the freezer as it may result in low temperature skin abrasions.

FREEZING FRESH FOOD

During the freezing process the temperature of fresh food should be reduced quickly so that ice crystals are kept as small as possible to prevent damaging the structure of food. If freezing takes place slowly large ice crystals are kept as small as possible to prevent damaging the structure of food. If freezing takes place slowly large ice crystals form and these will affect the quality of food once it has defrosted.
Models FD930W, FD930AL, CPD9W, CPD9AL, EBD9W, EBD9AL. **The maximum quantity of food you can freeze in 24 hours is 9 kg.** The refrigerated top shelf of the appliance is designed to operate as a fast freeze compartment.

1. To freeze a full 9kg of fresh food, precool the freezer by operating the fast-freeze switch (type B & C models) or turning the freezer control dial to setting 6 (type A models) 24 hours prior to introducing the food to be frozen. To freeze smaller quantities of fresh food reduce the precool period accordingly.
Existing frozen foods should be re-arranged to leave space on the top shelf for freezing.

2. Place packages on the top shelf in contact with the refrigerated surface as far as possible and space apart to allow cold air to circulate between them. They should not touch existing packets.

After 24 hours the food will be fully frozen. Transfer food to another shelf or basket if there is room. This will then allow space for further freezing. The control dial should be returned to its normal setting or the fast freeze switch turned off.

To Remove baskets (where applicable). or shelves

A Twist shelf or basket support retaining clip in direction of arrow A.
B Lift shelf or basket support out of moulding in direction of arrow B.
C Withdraw shelf or basket support forward - arrow C.
D To reposition shelf or basket support, place in front and rear mouldings and twist retainer clip in opposite direction to arrow A.
E Replace baskets (where fitted).

Fig. 20

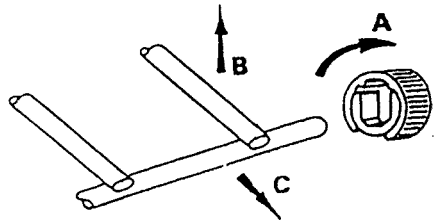

Download from Www.Somanuals.com. All Manuals Search And Download.

(Models FD800W, FD800AL, CPD8W, CPD8AL, EBD8W, EBD8AL) **The maximum quantity of food you can freeze in 24 hours is 3 kg.** Run for 3-4 hours before loading with frozen food. It is important that the bottom shelf is removed from the freezing compartment see (fig. 20)

3. Place as much food as possible in contact with walls and bottom of the cabinet. After 24 hours the food will be fully frozen.

NOTE:
Aim to check dates on packets and rotate foods regularly. Although storage longer than recommended is not harmful, flavours and textures begin to deteriorate.

GENERAL FOOD PREPARATION

1. FRUIT & VEGETABLES
Fruit and vegetables should preferably be frozen immediately after picking or purchasing or kept in a refrigerator for no longer than twenty four hours.

For perfect results fruit should be just ripe, and if any show signs of being damaged it should be discarded. Most vegetables and some fruit need to be blanched before freezing to retard enzyme reaction. Timings for individual types are given in the tables on pages 20 - 22.

BLANCHING :-

Where necessary plunge vegetables into boiling water for the specified period, and time from the moment they return to boil. Drain and cool immediately in iced water before packaging and freezing.

2. MEAT
Freeze joints in handy-sizes after trimming fat and removing bones if necessary. Game must be hung for the required period and cleaned before being hung.

3. POULTRY
Gut, singe and wash birds thoroughly. Tie legs and wings to the body before placing in the freezer, or cut into joints for packing separately. Giblets should be packed separately.

4. FISH
All types of fish should be preferably frozen within 24 hours of being caught. Any superflous scales should be removed along with the fins, then the fish gutted and washed clean in cold salted water before being frozen.

ICE MAKING

It may be necessary to build up a supply of ice cubes when entertaining or for a spell of hot weather when ice will be in demand.

First, make ice cubes by filling the ice tray with fresh drinking water to the top of each ice cube compartment and placing on the freezer shelf. When ice cubes have formed, hold the tray upside down and twist the tray along its length, allowing loosened cubes to fall into a plastic container or polythene bag. Store in the freezer and use when required.

PREPARED FOODS

These freeze well, but remember that seasonings may become stronger during frozen food storage. Salt shortens the storage time of frozen food so add a little more if necessary during preparation tendancy to thicken, so should be made up with a little more liquid than normal. Highly spiced and aromatic dishes should be wrapped thoroughly, so the flavour does not transfer to other frozen foods. Always cool prepared foods quickly and freeze immediately.

DO NOT PLACE HOT FOODS INTO THE FREEZER.

Download from Www.Somanuals.com. All Manuals Search And Download.

COOL FOODS QUICKLY

Hot food should not be put straight into the freezer because it can cause intensive work for the compressor and thus increase the energy consumption. Therefore it is important to cool cooked foods quickly before putting them into the freezer.

Food should also be cooled quickly to prevent bacterial growth and this may be done by transferring hot foods into a cold container and standing it into a sink filled with iced water. Ensure that food is covered and stir at regular intervals to reduce the temperature. Once cooled transfer food into a container suitable for freezing.

OPEN FREEZING

This method is commonly used to freeze fruits and vegetables. After preparation place the food in a single layer on foil covered baking sheets, trays or special fast freeze trays, ensuring that the items do not touch each other. Freeze the food uncovered until hard usually (1-2 hours), after which it can be packed into polythene bags.
This method produces free flow packs which means that portions, whatever size, can be taken out as required. Open freezing is also useful for delicate foods which could become damaged during packing, e.g. decorated cakes, flans and pastries.

PACKAGING

It is important to use the correct packing to preserve the quality of frozen food. All foods should be wrapped in moisture proof materials and be completely covered. The most useful materials are heavy gauge polythene bags or sheeting, plastic containers with tight fitting lids, aluminium foil, aluminium foil containers and waxed cardboard containers.

Plastic film can be used as an inner wrapping for food which is then over wrapped with a polythene bag, or can be used to interleave small items such as chops, steaks, burgers etc. so that they can be removed individually. Use freezer quality film or double wrap food items with standard kitchen film.

Pad any sharp protruding bones on meat and poultry with foil or plastic film to prevent the bag being pierced during freezer storage. A range of closures are available including bag ties, heat sealers and self seal type polythene bags.

Boiling bags can be used to both pack food in for freezing and for reheating that same food in a pan of boiling water.
They are especially useful for items such as new potatoes, sauces and single portions of cooked foods. As much air as possible must be extracted from the bag and an effective seal is essential.

Pack foods in even shapes to maximise space available in your freezer and facilitate removal when required later.

LABELLING

The most useful label is probably the self adhesive type as it can be used on every kind of surface. Information to be written on the label should include the type of food, approximate weight or likely number of servings, and any comments relevant to ultimate use. It may be necessary to keep a notebook handy to enable you to rotate stocks and keep reference on what type of foods are being used at one time.

Download from Www.Somanuals.com. All Manuals Search And Download.

THAWING FOOD

Most foods can be thawed in their original wrapping to maintain moisture and prevent any deterioration. Foods should be thawed in a cool place such as a refrigerator or if food is required quickly a microwave oven may be used, remembering to transfer foods from foil containers and remove wire enclosures from plastic bags. Always follow the instructions in the microwave oven's manual for thawing frozen food. It is essential that all foods particularly meat and poultry are completely defrosted before cooking.

1. FRUIT

Keep container closed and allow to thaw at room temperature for about five hours.

2. VEGETABLES

It is not necessary to thaw before cooking - place in salted boiling water, cover and time cooking from moment of return to boil which only takes a few minutes. Some vegetables can also be put in the oven with a knob of butter and some may be deep fat fried.

3. MEAT & POULTRY

Thaw completely before cooking by preferably leaving to defrost slowly in a refrigerator. If required quickly, a microwave oven may be used or allow 2 to 3 hours per ½ kg (lb) at room temperature. To check whether or not poultry is defrosted the legs should be able to move freely and there should be no ice crystals present.

4. DAIRY PRODUCTS

Allow eggs to thaw in closed containers and use immediately. Butter and cream depending on the quantity will thaw in one to two hours at room temperature.

5. BAKED ITEMS

Bread takes about two hours to thaw or loaves may be heated in the oven. Cakes can be sliced in their frozen state to retain shape and speed the thawing process.

6. PREPARED FOODS

Heat gently in closed containers in the oven and season if necessary.

7. COMMERCIAL PACKS

Follow the printed instructions given by the manufacturers.

Download from Www.Somanuals.com. All Manuals Search And Download.

Food Freezing Guide

	Max. Storage Period	*Method*	*Remarks*
MEAT joints			
Beef	10-12 months	Remove additional fat Cut to handy size wrap thoroughly	Pad bone ends
Pork	6 months	Cut to hand size wrap thoroughly	ditto
Lamb	9 months	Cut to hand size wrap thoroughly	ditto
Steak	10-12 months	Open freeze or interleave with plastic film	ditto
Chops	See Pork or Lamb above	ditto	ditto
Veal Fillets	6-9 months	ditto	
Bacon, cured smoked	6 weeks 1 month	ditto	Pack in handy meal portions
Sausages	6 weeks	Wrap tightly	Pack in handy meal portions
Minced meat	2 months	Wrap tightly	Pack in handy meal portions
Offal and tripe	3 months	Clean thoroughly, remove tubes cores and fat, pack in small portions	Make sure it is really fresh
POULTRY			
Chicken	9-12 months	Clean in usual way, joint if necessary, wrap thoroughly	Wrap giblets separately, pad bone ends. Do not stuff till ready
Turkey	9-12 months	Clean in usual way, joint if necessary	ditto
Duck, Goose	6 months	Clean in usual way, joint if necessary	ditto
Giblets	3 months		Wrap separately from bird
Game	6 months	Hang before freezing	Cook immediately after thawing
FISH			
All types	3 months	Clean, descale, discard head and tail, wrap separately	Must be fresh
Trout	3 months	Clean, descale, discard head and tail, wrap separately	Must be fresh
Salmon	3 months	Clean, stuff with greaseproof paper for shape retention or cut into steaks, cutlets or fillets	Must be fresh
VEGETABLES			
Mushrooms	3 months	Leave button mushroom whole, slice larger ones. Trim stalks, wash, dry thoroughly. Freeze open (or sautéd in a little butter till partially cooked then freeze).	Pack in boxes

Download from Www.Somanuals.com. All Manuals Search And Download.

	Max. Storage Period	*Method*	*Remarks*
Potatoes	3 months	New potatoes and chips can be frozen raw. Otherwise cook partially in one of usual forms, cool then freeze	
Beans (Broad, French or Runner)	12 months	Peel or pod, and wash, top and tail. Cut large beans into shorter lengths or slice.	Blanch for 2 mins., cool for same time in iced water then freeze.
Carrots	12 months	Use small ones. Prepare by scraping, top and tail.	Blanch for 3-4 mins.
Cauliflower	12 months	Break up the florets and wash.	Blanch for 3 mins. Add lemon juice to water to improve whiteness.
Spinach	12 months	Wash thoroughly. Remove thicker veins. Chop if liked.	Blanch a few leaves at a time, for 2 mins.
Sprouts	12 months	Use only small ones. Remove outer leaves.	Blanch for 3 mins.—medium 1½-2 mins.—small
Root crops	12 months	The younger the better. Peel and slice or freeze whole.	Blanch for 3-5 mins.
FRUIT			
Apples	9-12 months	Freeze either of two ways: as puree-stew with little water, beat to smooth pulp, sweeten to taste, blanch for two mins., drain and cool. Pack tightly in layers with a little dry sugar sprinkled between, if so desired; or soak in slightly salted water for ten minutes, dry and freeze.	Freeze in small quantities. Pack in plastic containers, leaving 1.5cm (½ in.) headroom.
Apricots	10-12 months	Preferably remove stones, but leave skins on. Pack in syrup ½-1 lb. 200-400g (½-1 lb.) sugar to 550ml (1 pint) of water, making sure fruit is covered.	Pack in plastic containers, leaving 1.25-2.5cm (½-1 in.) 2.5cm (½-1 in) headroom.
Cherries	12 months	ditto	ditto
Damsons	12 months	ditto	ditto
Plums	9 months	ditto	ditto
Gooseberries	12 months	ditto	ditto
Blackberries	12 months	Either pack in syrup as above, or coat with caster sugar and pack in plastic containers. Also may be frozen open then pack in containers.	ditto
Currants	12 months	ditto	ditto
Raspberries	12 months	ditto	ditto
Strawberries	12 months	ditto	ditto

Download from Www.Somanuals.com. All Manuals Search And Download.

	Max. Storage Period	*Method*	*Remarks*
Peaches	10 months	Cover with boiling water for 1 minute, then cool by dipping into cold and peel carefully. Cut into halves, removing stone. Use syrup method of packing and freezing.	Keep fruit submerged in syrup, place crumpled greaseproof paper on top, so there is no room between the surface of the liquid and the lid.
DAIRY PRODUCTS			
Eggs Whole	6 months	Pack leaving headspace, beat slightly.	Do not freeze eggs in their shells as they will crack.
Egg Whites	6 months	Beat slightly, place whites in small containers just a few at a time.	
Egg Yolks	6 months	As for whites, but to prevent coagulation mix with ¼ tsp. salt or ½ tsp. caster sugar to every two yolks.	Use for savoury or sweet dishes, label so that correct yolks are used.
Butter	6 months (unsalted) 3 months (salted)	Wrap bought butter in foil and freeze	
Cream Whipping and Double only	3 months	Must first be beaten lightly before freezing. Rosettes of whipped cream can be piped onto silicone paper and open frozen.	Allow slight room for expansion in the container. Pack in layers.
Cheese	4 months (soft) 3-4 months (hard)	Wrap all varieties tightly in foil	Hard cheese stores much better when grated.
BAKED ITEMS Wrap in foil or polythene bags			
Bread (Freshly baked)	1-2 months	Wrap and freeze	
Cakes, plain	6 months	Wrap and freeze.	
Cakes, iced	3 months	Freeze without wrapping, then wrap and store in polythene.	
PREPARED FOODS			
Stews	2 months	May be frozen quite satisfactorily in a polythene bag	Place bag inside a square plastic or cardboard box to shape the contents into bricks which save space in freezer.
Sauces	4 months	Freeze in quantities of 275ml (½ pint) A little extra liquid may be required, when you come to use it.	Egg based sauces are unsuitable
Full courses	3 months	Assemble individual helpings on specially constructed aluminium trays, then cover with foil. To re-heat leave the cover on an put in the oven for about 45 minutes at 200°C/Mark 6.	Cover slices of meat with gravy to prevent drying out

Download from Www.Somanuals.com. All Manuals Search And Download.

COMPLETE DEFROSTING

Complete defrosting will in the course of time become necessary. This should be carried out if the frost build up cannot be all scraped away or if it begins to interfere with the food storage. Choose a time when the stock of frozen food is low and proceed as follows:

1. Take out the frozen food. Switch the appliance off at the electricity supply and leave the door open.

2. Ideally the foods should be put into another freezer or refrigerator. If this is not possible, wrap it in a compact block, first in several sheets, newspapers or thick towels, then in a thick rug or blanket. Keep it in a cool place.
Models: FD800W, FD800AL, CPD8W, CPD8AL, EBD8W, EBD8AL. See Note 3.

OTHER MODELS:

Place the handle of the plastic scraper supplied, in the recess at the bottom of the freezer compartment to act as a drainage spout. Put a suitable container under the spout to collect the defrost water and leave the door open (see Fig.21)

Fig 21.

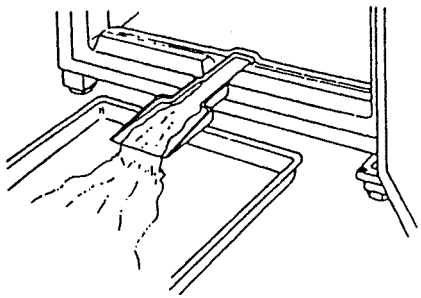

3. Scrape away as much frost as possible. Thawing of the remainder can be accelerated by placing bowls of hot water on the shelves inside the cabinet. As the solid frost loosens, prise it away with a wooden or plastic scraper. When defrosting is complete, wipe over the cabinet and the door with bicarbonate of soda and water and dry thoroughly as described under "Cleaning and Care".

4. When the cabinet is completely dry and clean, close the door and switch on the electicity supply. With the thermostat at the recommended setting run for 30 minutes before reloading with frozen foods.

IMPORTANT NOTE

Provided our recommendations for the periodical removal of frost are followed, the defrosting should be complete within 2 hours. Provided the frozen food has been wrapped during defrosting as described above, it can be replaced in the freezer. If for any reason the defrosting process has taken longer than 2 hours the outside of the frozen foods may begin to soften.
Provided the foods have not completely thawed they will refreeze satisfactorily, although repeated rise in temperature may cause slight deterioration in quality.

Download from Www.Somanuals.com. All Manuals Search And Download.

CLEANING AND CARE

SWITCH OFF THE APPLIANCE AT THE ELECTRICITY SUPPLY.

The interior of your appliance should be cleaned at regular intervals depending on usage. Always clean when food is at a minimum.

1. Empty the compartment and keep foods in a cool place.
2. Wash the interior and all fitments with a clean cloth wrung out in a bicarbonate of soda solution - 5 ml (1 teaspoon) bicarbonate of soda 500 ml (1 pint) warm water. NEVER USE DETERGENTS OR ABRASIVE POWDERS TO CLEAN THE INTERIOR AS THESE WILL DAMAGE THE SURFACE AND LEAVE A STRONG SMELL.
3. The door seal should be cleaned with soapy water and thoroughly dried.
4. The outside should be wiped clean with a damp cloth and stubborn marks may be removed with a non-scratch cream cleanser. Wipe dry with a soft cloth. A small amount of wax spray polish may be applied to the exterior every few months to maintain the gloss finish.
5. The condenser grill situated at the back of the appliance should be dusted carefully occasionally.
6. Switch on at the electricity supply and replace fitments and food.

IF GOING ON HOLIDAY

If you are going away for a period of time the following advice should be followed:

1. For 2 days - No need to remove any food from the larder compartment except perishable foods such as meats and poultry.
2. Up to 1 week - Remove all foods out of the larder compartment except for eggs, butter and bacon, providing the "Best Before" date or recommended storage times are not exceeded.
3. Over 1 week - Empty all contents, out of the larder compartment.

Note: If you are transporting the appliance i.e. when moving house, switch off at the electricity supply, empty, defrost, clean and dry. Cover the appliance in packaging materials to prevent any damage occurring whilst transporting. **Transport upright or on right hand side when viewed from front.** The appliance should be left to stand before switching on again to allow the refrigerant to settle.

Download from Www.Somanuals.com. All Manuals Search And Download.

SOMETHING NOT WORKING

SERVICE CHECK

If the appliance is noisy:

1. Ensure that the appliance compressor unit has not been pushed against the wall, or that any foreign objects are not resting against the compressor unit at the base of the appliance.

2. Check the appliance is level, see "How to install your appliance (see page 4).

3. Ensure that the tubes at the back of the appliance are not vibrating against the cabinet or any other part. If this is so, they should be eased away gently.

4. The liquid refrigerant sometimes causes a bubbling sound. This is quite normal in an appliance of this type.

If the appliance fails to operate:

1. If there a power failure? Check your house lights. If so, keep the door closed until the power is restored.

2. Is the plug firmly connected to the wall socket and is the socket switched on? Check the power supply by plugging in another appliance or a table lamp.

3. Is the fuse in the plug in tact and are the wires in the mains lead correctly connected to the plug? (see page 5).

4. Have you turned the thermostat to the correct settings?

5. Has the door been left open causing the temperature to rise?

6. If the appliance still does not operate contact your nearest Tricity Bendix Service Centre or for Electra models your nearest Electricity Board Showroom or Shop.

RATING PLATE

The rating plate (A) is situated inside the cabinet behind the salad drawer or freezer bin (see fig. 22). It gives the model and serial numbers which should be quoted in any communication. For future reference record the information below:

Model No:
Serial No:
Date of Purchase:

NB. This appliance complies with the Radio Interference requirements of EEC Directive 82/499/EEC.

Fig. 22

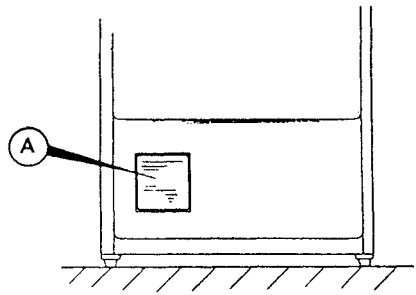

Download from Www.Somanuals.com. All Manuals Search And Download.

HELP US TO HELP YOU —

SERVICE

In the event of your appliance requiring service Tricity Bendix Ltd. have an arrangement with Electrolux Group Service. Before calling out an engineer, please ensure you have followed the checklist and that you have the model number and purchase date to hand. Telephone numbers are detailed on the list headed "Tricity Bendix Service Centre".

Please note that all enquiries concerning service should be addressed to your local service centre.

When booking a service call we also need to know your name, address with postcode (service areas are defined by the postcode), telephone number, and what appears to be wrong.

Keep the receipt with this booklet as proof of purchase.

CUSTOMER RELATIONS DEPARTMENT

For general enquiries concerning your Tricity Bendix appliance, or further information on Cookers, Microwaves, Refrigeration or Home Laundry equipment you are invited to contact our Customer Relations Department by letter or telephone as follows:

Customer Relations Department
Tricity Bendix Ltd.
Tricity Bendix House
55-59 High Road
Broxbourne
Hertfordshire
EN10 7HJ

Tel:— 0992 469080

Download from Www.Somanuals.com. All Manuals Search And Download.

Tricity Bendix Service Centres

SERVICE AND SPARES FOR TRICITY BENDIX

ABERDEEN DD IV KW AB PH	0224 696569	8 Cornhill Arcade, Cornhill Drive, Abderdeen, AB2 5UT
ALTHAM SK M BL OL BB	0282 74621/2/3/4	Altham Lane, Altham, Accrington, Lancs BB5 5XX
BELFAST BT	0232 746591	Unit C3, Edenderry Industrial Estate, 326 Crumlin Road, Belfast, BT14 7EE
BIRMINGHAM WR DY B WW TF ST WS	021 358 7076	8 Lammermoor Ave., Great Barr, Birmingham, B43 6ET
BRIGHTON BN RH	0273 694341	31 Bristol Gardens, Kemptown, Brighton, BN2 5JR
BRISTOL BA BS SN TA	0272 211876	3 Waring House, Redcliffe Hill, Bristol, BS1 6TB
CANVEY ISLAND RM CM SS CO IG	0268 694144	2-4 Sandhurst, Kings Road, Canvey Island, SS8 QQY
CARDIFF CF HR LD NP SA	0222 460131	Guardian Industrial Estate, Clydesmuir Road, Tremorfa, Cardiff, CF2 2QS
EDINBURGH KY EH TD FK	031 557 8383	33b Haddington Place, Leith Walk, Edinburgh, EH7 4AG.
GATESHEAD CA DL DH NE SR TS	091 493 2025	Suite 3, Saltwell House, Lobley Hill Rd., Gateshead, NE8 4DD
GLASGOW DG KA ML G PA PH	041 647 4381	20 Cunningham Road, Clyde Estate, Rutherglen, Glasgow, G73 1PP
LEEDS S DN HU YO WF HX HD LS HG BD	0532 608511	64-66 Cross Gates Road, Leeds. LS15 7NN
LEICESTER LE DE CV NG LN	0533 515131	10-12 Buckminster Road, Leicester, LE3 9AR
LIVERPOOL CW CH LL SY L WA WN PR FY LA	051 254 1724	Unit 1, Honeys Green Lane, West Derby, Liverpool, L12 9JR
LONDON (NORTH) E EC WC N NW W EN SW1 SW3 SW5 SW6 SW7 SW10	01 443 3464	Duck Lees Lane, Brimsdown Industrial Estate, Enfield, Middx. EN3 7XD
LONDON (SOUTH) SE SM CR BR SW2 SW4 SW8 SW9 SW11-20	01 658 9069	127 Croydon Road, Beckenham, Kent, BR3 3RA
LONDON (WEST) AL CB LU MK SG WD HA UB TW	01 965 9699	842 Coronation Road, Park Royal, London, NW10 7QA
NEWTON ABBOT EX PL TQ TR	0626 65909	2nd Floor, 7 Bridge House, Courtenay Street, Newton Abbot, TQ12 2QS
NORWICH IP NR PE	0603 667017	1 Malthouse Lane, Norwich, Norfolk, NR2 1SC
OXFORD GL HP NN OX SL RG	0993 704411	Suite 3, Windrush Court, 56a High Street, Witney. OX8 6BL
PORTSMOUTH BH DT PO SO SP KT GU	0705 667411	Limberline Road, Hilsea, Portsmouth, PO3 5JJ
TONBRIDGE CT DA ME TN	0732 357722	61-63 High Street, Tonbridge, TN9 1SD

Download from Www.Somanuals.com. All Manuals Search And Download.

Guarantee

This Guarantee is offered to you as an extra benefit and does not affect your legal rights.

Tricity Bendix products are carefully designed, manufactured, tested and inspected and in consequence we undertake to replace or repair any part found to be defective in material or workmanship, within one year of delivery to the original purchaser, free of charge.

The Company does not accept liability for defects arising from neglect, misuse, or accident. The interior lightbulb and glassware on refrigerators and larders are also excluded from the guarantee.

There are certain conditions which may invalidate this guarantee:

a) It is dependent upon the appliance being correctly installed and used in accordance with the Company's instructions under normal domestic conditions within the United Kingdom or the Republic of Ireland.

b) Service under the guarantee must be carried out by a Tricity Bendix service representative or authorised agent.

c) The guarantee may be invalidated by unauthorised repair or modification of the appliance.

Proof of the date of purchase will be required before service under guarantee is provided. Addresses or telephone numbers for service requests are detailed on the list headed 'Tricity Bendix Service Centres'.

We must point out that this guarantee does not cover liability for loss of food or other contents.

Download from Www.Somanuals.com. All Manuals Search And Download.

Download from Www.Somanuals.com. All Manuals Search And Download.

Download from Www.Somanuals.com. All Manuals Search And Download.

Download from Www.Somanuals.com. All Manuals Search And Download.

Free Manuals Download Website

http://myh66.com

http://usermanuals.us

http://www.somanuals.com

http://www.4manuals.cc

http://www.manual-lib.com

http://www.404manual.com

http://www.luxmanual.com

http://aubethermostatmanual.com

Golf course search by state

http://golfingnear.com

Email search by domain

http://emailbydomain.com

Auto manuals search

http://auto.somanuals.com

TV manuals search

http://tv.somanuals.com