CABINET PARTS

REFRIGERATOR

For Models: KSRS27QAWH10, KSRS27QAAL10
(White) (Almond)

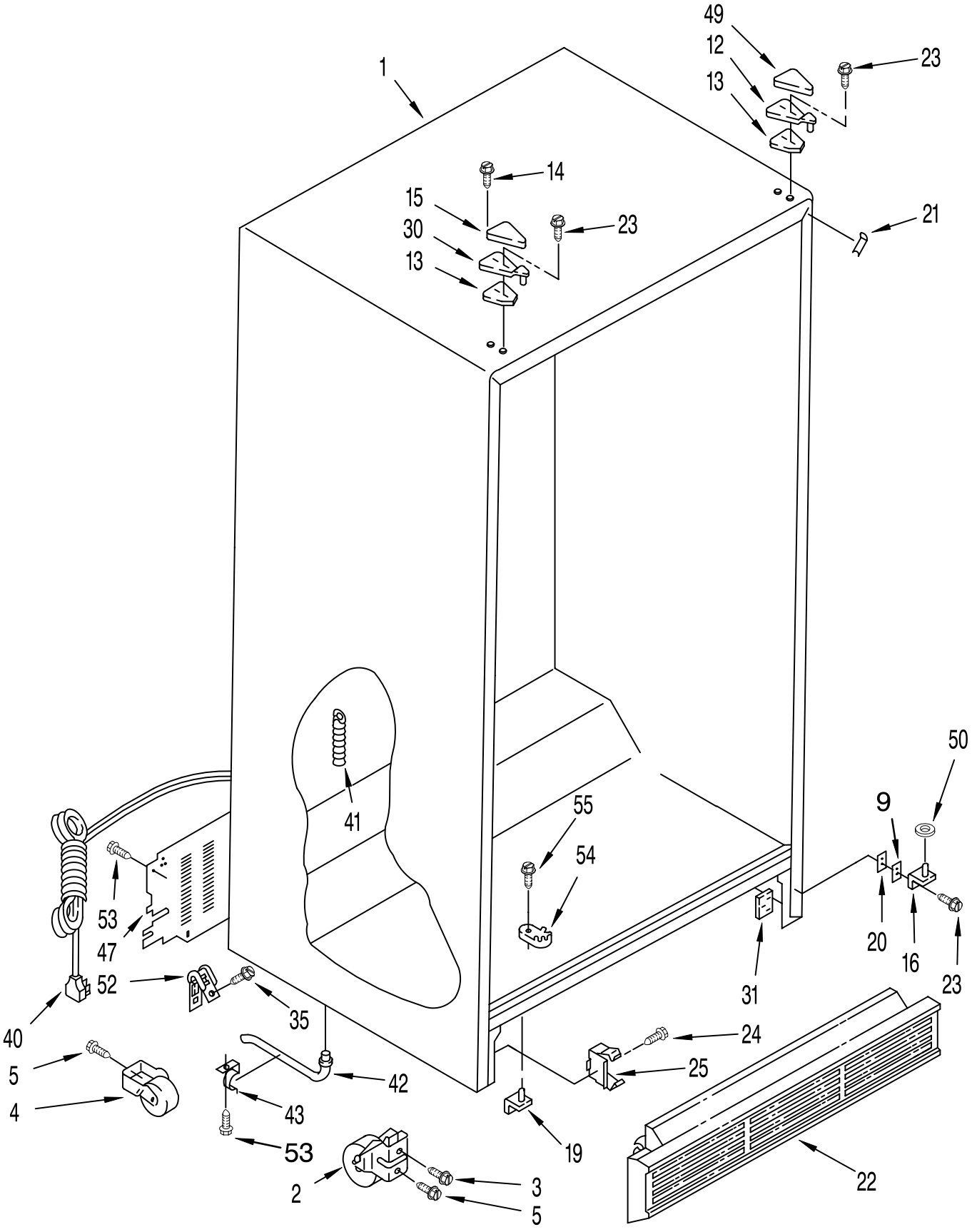

FOR ORDERING INFORMATION REFER TO PARTS PRICE LIST

CABINET PARTS

For Models: KSRS27QAWH10, KSRS27QAAL10
(White) (Almond)

Illus. No.	Part No.	DESCRIPTION
1		Cabinet (Not A Serviceable Part)
2	2152011	Front Roller (2)
3	489393	Screw
4	981122	Roller (Rear) (2)
5	488454	Screw
9	836196	Shim
12	1117937	Hinge Top (R.H.)
13	1123515	Shim, Hinge Top
14	489284	Screw
15		Hinge Cover
	1129262	White
	2150343	Almond
16	2155321	Hinge Bottom (R.H)
19	2155323	Hinge Bottom (L.H)
20	1129868	Spacer, Hinge
21		Filler, Wrapper
	1110708	White
	1110709	Almond
22		Grille
	2155486	White
	2155487	Almond
23	489367	Screw
24	489242	Screw
25	2155013	Clip, Grille
30	2155449	Hinge, Top (L.H.)
31	2147310	Tap Plate (2)
35	489337	Screw
40	937360	Service Cord
41	940139	Drain Fitting
42	1108438	Tube, Extension
43	1108439	Clip, Drain Tube
47	2171576	Cover, Unit
49		Hinge Cover
	1119787	White
	1119789	Almond
50	489366	Washer
52	549193	Clamp, Service Cord
53	489084	Screw
54	2155310	Door Closer, Lower Cam
55	489420	Screw

REFRIGERATOR LINER PARTS

For Models: KSRS27QAWH10, KSRS27QAAL10
(White) (Almond)

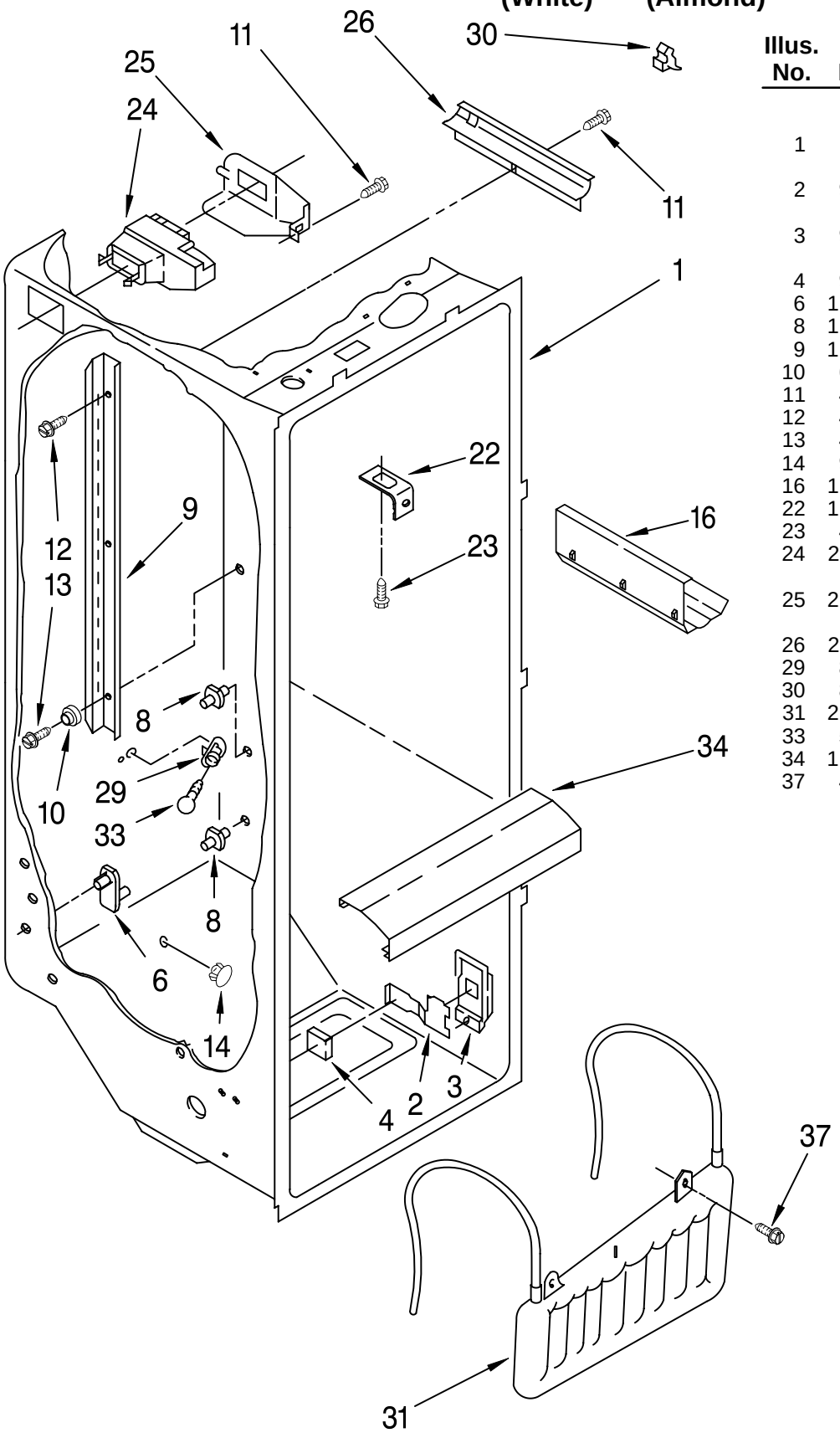

Illus. No.	Part No.	DESCRIPTION
1		Liner (Not A Serviceable Part)
2	985468	Escutcheon, Meat Pan Control
3	984102	Slide Meat Pan Control
4	992358	Foam Pad
6	1125675	Stud, Pan Cover
8	1110718	Stud (9)
9	1116794	Ladder, Shelf (2)
10	658944	Stud, Shelf (2)
11	486298	Screw (2)
12	487539	Screw
13	487559	Screw (2)
14	941839	Plug, Hole
16	1126137	Rack, Wine & Egg
22	1123919	Bracket Retainer
23	489290	Screw, (2)
24	2161251	Air Diffuser Assembly
25	2152019	Air Diffuser Cover
26	2150331	Cover, Conduit
29	851067	Socket, Light
30	842534	Clip, Air Duct
31	2155290	Reservoir
33	527949	Light Bulb
34	1125586	Light Lens
37	488280	Screw (2)

FOR ORDERING INFORMATION REFER TO PARTS PRICE LIST

REFRIGERATOR SHELF PARTS

For Models: KSRS27QAWH10, KSRS27QAAL10

(White) (Almond)

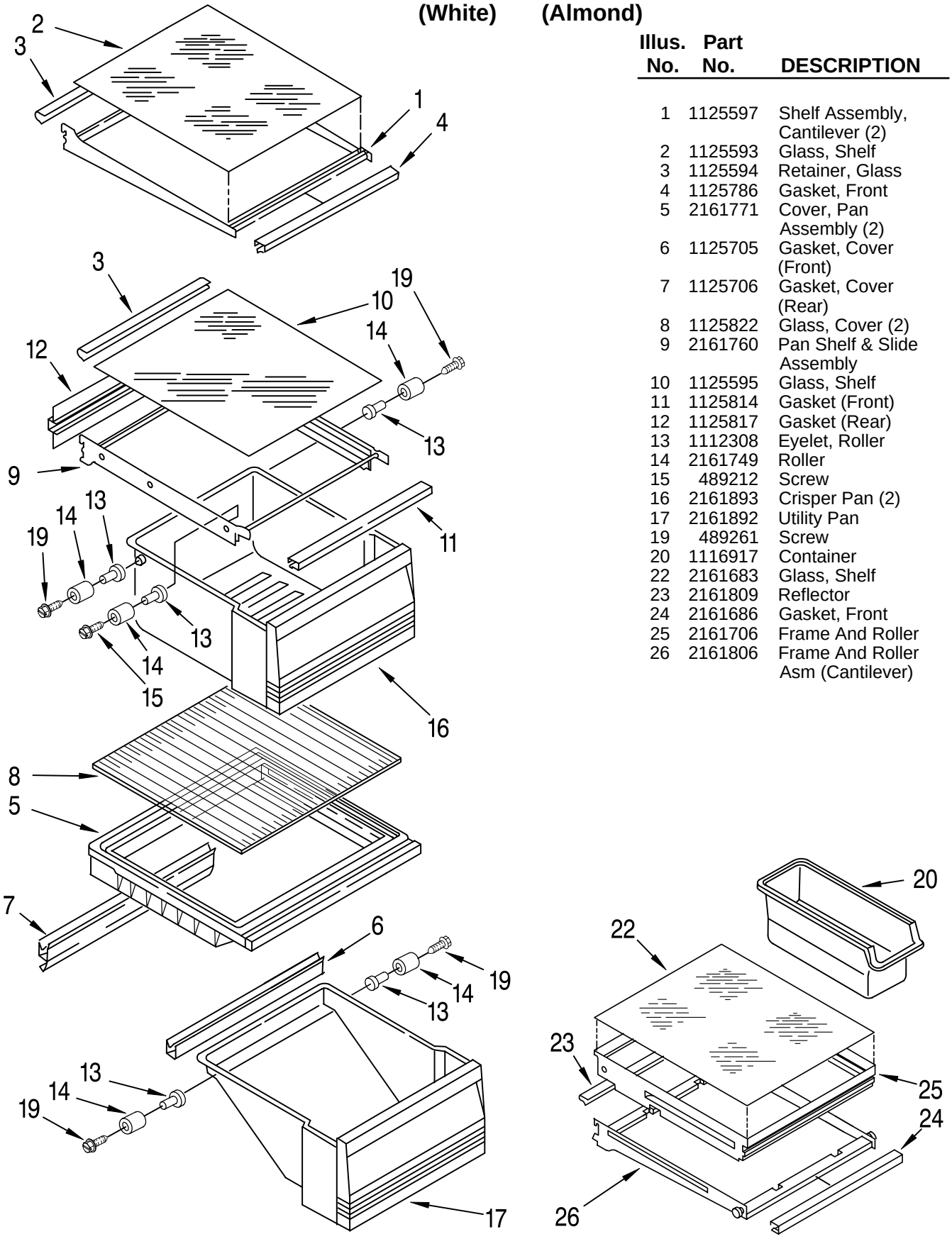

Illus. No.	Part No.	DESCRIPTION
1	1125597	Shelf Assembly, Cantilever (2)
2	1125593	Glass, Shelf
3	1125594	Retainer, Glass
4	1125786	Gasket, Front
5	2161771	Cover, Pan Assembly (2)
6	1125705	Gasket, Cover (Front)
7	1125706	Gasket, Cover (Rear)
8	1125822	Glass, Cover (2)
9	2161760	Pan Shelf & Slide Assembly
10	1125595	Glass, Shelf
11	1125814	Gasket (Front)
12	1125817	Gasket (Rear)
13	1112308	Eyelet, Roller
14	2161749	Roller
15	489212	Screw
16	2161893	Crisper Pan (2)
17	2161892	Utility Pan
19	489261	Screw
20	1116917	Container
22	2161683	Glass, Shelf
23	2161809	Reflector
24	2161686	Gasket, Front
25	2161706	Frame And Roller
26	2161806	Frame And Roller Asm (Cantilever)

FREEZER LINER PARTS

For Models: KSRS27QAWH10, KSRS27QAAL10
(White) (Almond)

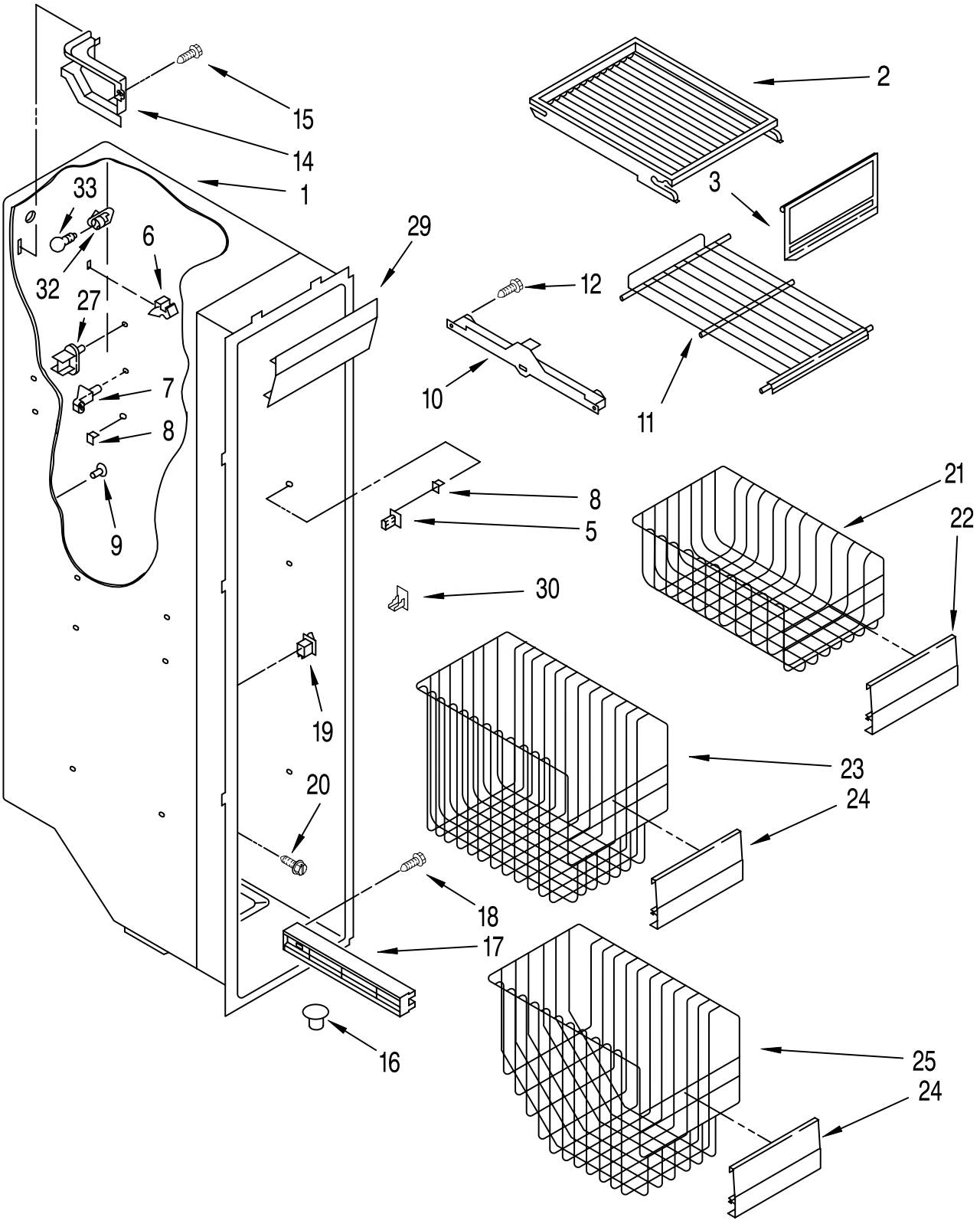

FOR ORDERING INFORMATION REFER TO PARTS PRICE LIST

FREEZER LINER PARTS

For Models: KSRS27QAWH10, KSRS27QAAL10
(White) (Almond)

Illus. No.	Part No.	DESCRIPTION
1		Liner (Not A Seviceable Part)
2	1125824	Shelf, Top Compartment
3	1125657	Door, Ice Compartment
5	946356	Stud, R.S. Front
6	842534	Clip, Air Duct (2)
7	1115317	Support, Stud (4)
8	946355	Support, Stud (2)
9	1110779	Grommet (2)
10		Slide, Container
	1119237	Left Side
	1119293	Right Side
11	2155683	Shelf
12	489100	Screw (4)
14	2155572	Cover, Wiring
15	489176	Screw
16	2155556	Drain Fitting
17		Shelf Track
	1126354	Right Side (3)
	1126355	Left Side (3)
18	487042	Screw
19	1115373	Switch, Rocker Arm
20	489242	Screw
21	2155685	Basket, Middle
22	1125770	Front, Basket
23	2152093	Basket, Upper
24	1125612	Front, Basket
25	2152102	Basket, Lower
27	1115386	Stud, Shelf (4) Compartment
29	1115389	Light Lens
30	1106982	Stud, R.S. Rear
32	851067	Socket, Light
33	527949	Bulb, Light

MOTOR AND ICE CONTAINER PARTS

For Models: KSRS27QAWH10, KSRS27QAAL10

(White) (Almond)

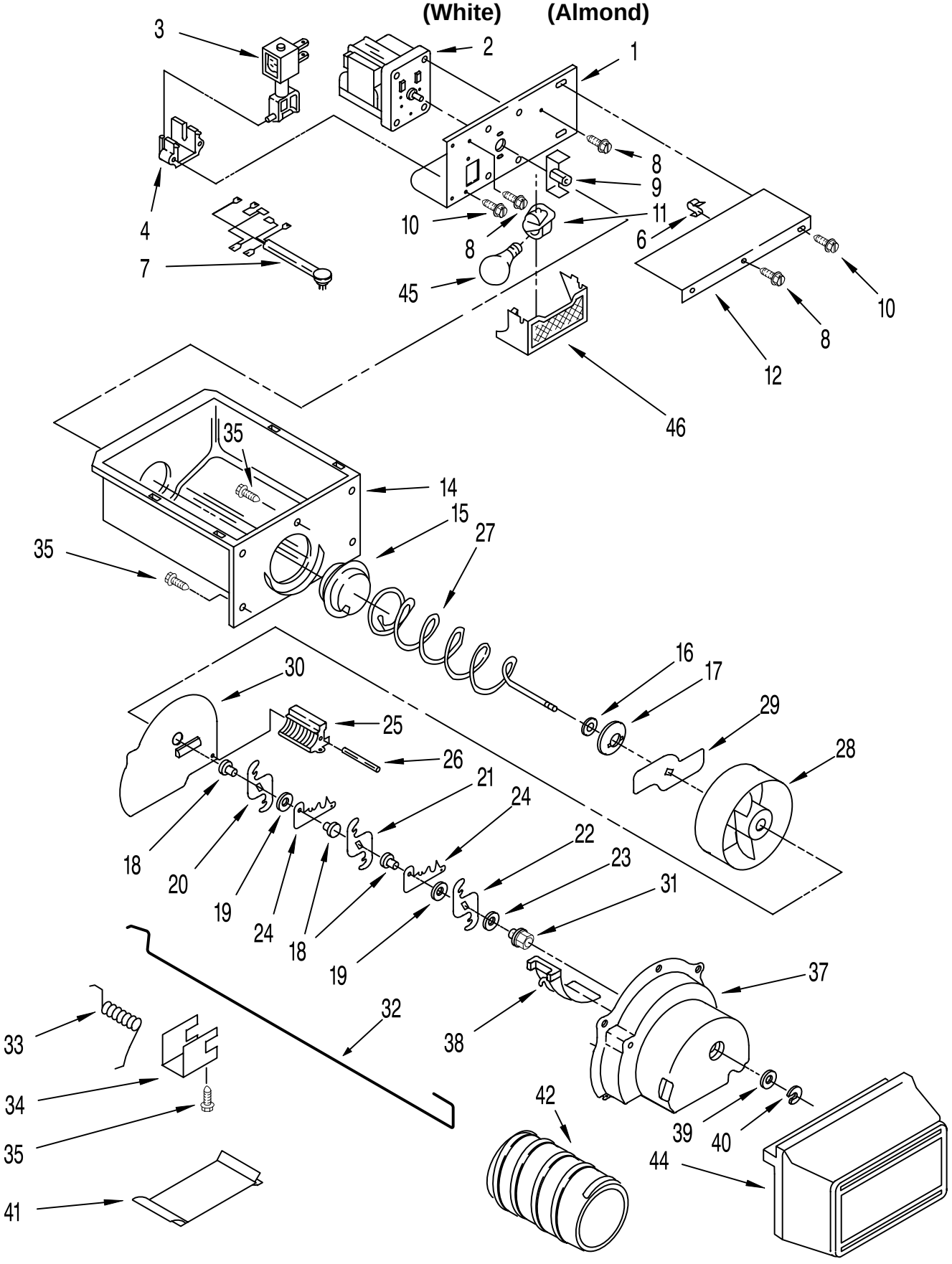

FOR ORDERING INFORMATION REFER TO PARTS PRICE LIST

MOTOR AND ICE CONTAINER PARTS

For Models: KSRS27QAWH10, KSRS27QAAL10

(White) (Almond)

Illus. No.	Part No.	DESCRIPTION
1	1118386	Bracket, Motor
2	2155263	Motor, Dispenser
3	2152713	Soleniod Assembly
4	2149100	Guide, Solenoid
6	1115374	Clip, Wiring
7	2149192	Wiring Assembly, Ice Dispenser
8	489399	Screw
9	983663	Coupling, Motor
10	489242	Screw
11	851067	Socket, Light
12	1115339	Cover, Motor
14	2152702	Ice Container
15	983668	Coupling, Conveyor
16	1118480	Stop, Cone
17	1119074	Feeder Cone
18	1119005	Spacer, Step (3)
19	1119007	Spacer, Flat (2)
20	1119006	Blade, Rotary
21	1119012	Blade, Rotary
22	1119013	Blade, Rotary
23	489235	Washer, Plain
24	1119009	Blade, Fixed (2)
25	2157405	Block, Blade
26	489229	Roll Pin
27	1119003	Conveyor
28	2171681	Drum
29	1118470	Drive Bar
30	2171682	Floating Baffle
31	1119018	Nut, Bearing
32	2155231	Control Arm
33	1119020	Spring, Return
34	1119021	Retainer Clip, Rod
35	488886	Screw
37	2157407	Housing, Crusher
38	1119017	Deflector, Ice
39	489234	Washer, Plain
40	489236	Retainer Ring
41	2152700	Housing, Filler
42	2152021	Sleeve−Auger
43	1119043	Ice Deflector
44	1126036	Front Cover, Ice Container
45	527949	Light Bulb
46	983359	Light Lens, Dispenser

FOR ORDERING INFORMATION REFER TO PARTS PRICE LIST

REFRIGERATOR DOOR PARTS

For Models: KSRS27QAWH10, KSRS27QAAL10
(White) (Almond)

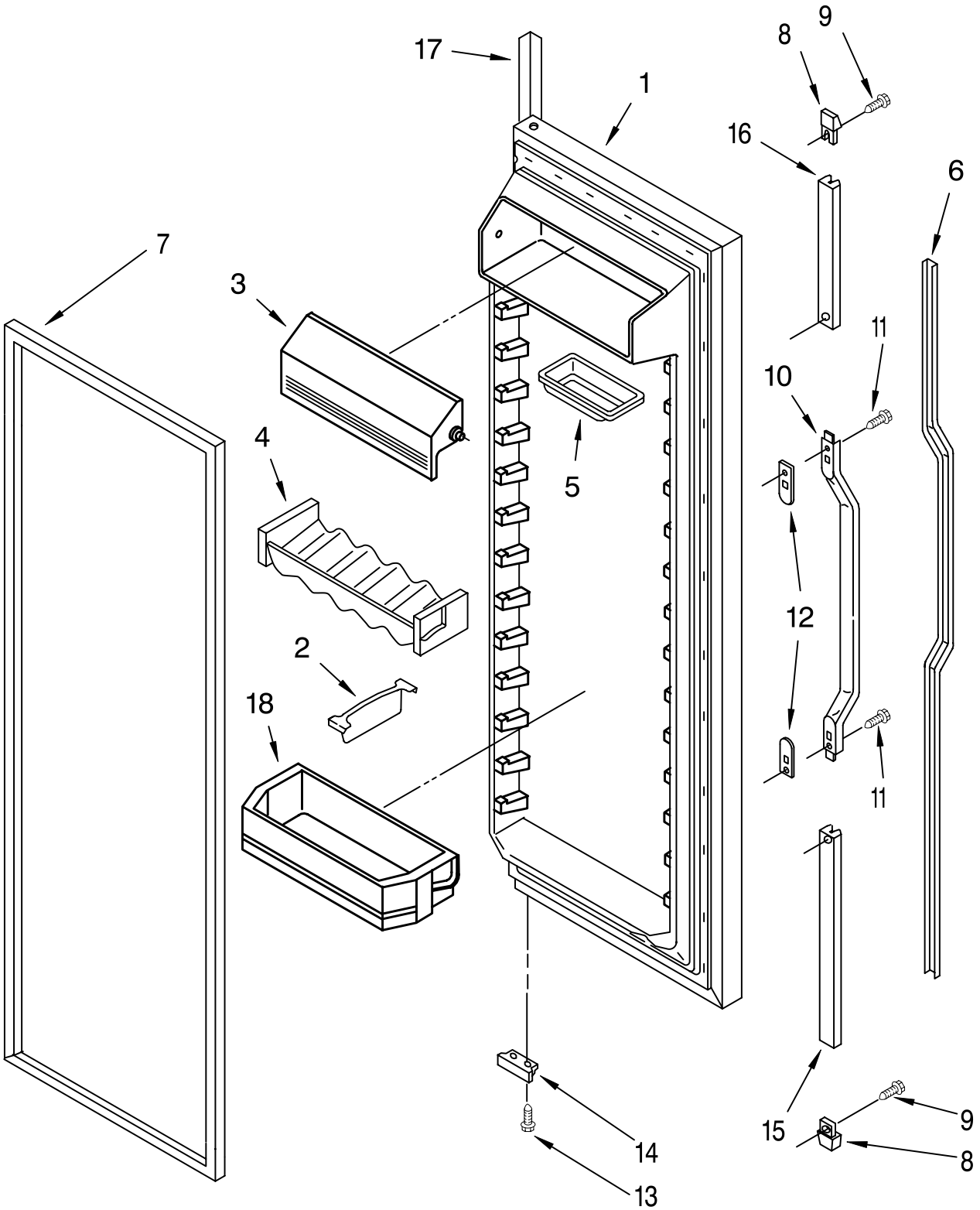

FOR ORDERING INFORMATION REFER TO PARTS PRICE LIST

REFRIGERATOR DOOR PARTS

For Models: KSRS27QAWH10, KSRS27QAAL10

(White) (Almond)

Illus. No.	Part No.	DESCRIPTION
1		Refrigerator Door (Includes Item 7)
	2171580	White
	2171581	Almond
2	2161564	Load Lock
3	2159136	Door, Compartment
4	1125981	Holder, Beverage
5	1125936	Butter Dish
6		Insert, Handle
	1117948	White
	1117949	Almond
7	2159079	Door Gasket, Magnetic (Service)
8	1107341	End Cap, Handle
9	489075	Screw (2)
10	1107215	Handle Assembly
11	489084	Screw
12	1107651	Spacer, Handle
13	489367	Screw
14	2155331	Bracket, Door Stop
15	1117952	Retainer, Insert (Bottom)
16	1107243	Retainer, Insert Hinge Side
17	1119062	Trim, Door
18	1126069	Shelf Bin (4)

BLACK GLASS PANEL KIT
(Optional Kit)

4318526	Trim Kit
	Trim Kit Panels
4211148	White
4211147	Almond
4210348	Black
	Handle Inserts
4318339	Black
4318340	Woodgrain
4318417	Black Grille Kit

PARTS NOT ILLUSTRATED

Parts Not Illustrated and Optional Parts (Not Included)

Customer Touch−Up Material

*350942	Primer, White (13 Oz. Spray Can)
*350941	Leveler, Enamel (13 Oz. Spray Can)
*350939	Enamel, Black (13 Oz. Spray Can)
*350930	Enamel, White (13 Oz. Spray Can)
*350956	Enamel, Almond (13 Oz. Spray Can)
72017	Brush Touch−Up Kit (White)
72107	Brush Touch−Up Kit (Almond)
72032	Brush Touch−up kit (Black)

Miscellaneous

212643	Sealer, Gum (4 Feet)
479502	Tape, Vinyl (3/4 x 108")
876370	Kit, Insulation (2 Pcs. x 3" x 24" X 48")
876305	Kit, Insulation (14 Pcs. x 3" x 24" x 48")
978941	Insulation, Fiberglass (63−1/2" x 35−1/2" X 2−5/8)
876029	Kit, Foam Slab (30" x 32−1/2" x 1−1/2")
505587	Sealer, Mastic (1 Qt.)
503695	Cork, Sealer (1/4 Pound)
511873	Touch−Up, White Porcelain (2 Oz.)
542638	Grease, Silicone (1/2 Oz.)
542639	Cement, Alumilastic (1−1/4 Oz.)
606755	Bag, Insulation (36−5/8" x 46")
799833	Kit, Evaporator Repair (Aluminum Epoxy)
833938	Kit, Terminal Connector
515393	Transformer (115−230 Volts)
2152710	Ice Container Asm
2149072	Ice Crusher Asm

Refinishing Material

799340	Enamel, Black (1 Qt. Uncut)
799344	Enamel, White (1 Qt. Uncut)
978883	Enamel, Almond (1 Qt. Uncut)

LITERATURE PARTS

LIT2155734	Use And Care Guide
LIT2169394	Service & Wiring Sheet
LIT2168863	Energy Label
LIT628370	Modular Icemaker Service Sheet

TORX SCREW WRENCH

1117510	Torx Key

FOR ORDERING INFORMATION REFER TO PARTS PRICE LIST

FREEZER DOOR PARTS

For Models: KSRS27QAWH10, KSRS27QAAL10

(White) (Almond)

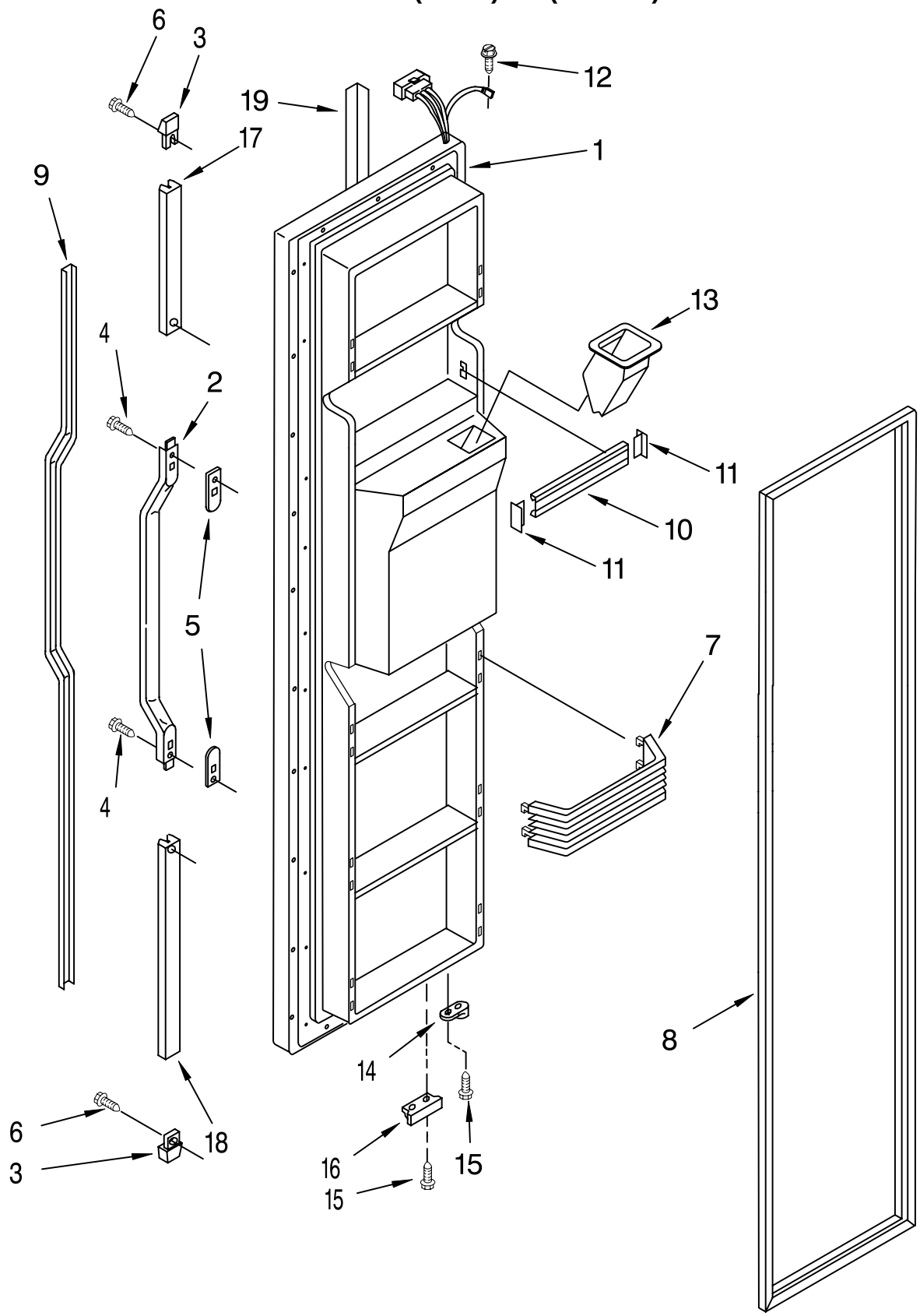

FREEZER DOOR PARTS

For Models: KSRS27QAWH10, KSRS27QAAL10
(White) (Almond)

Illus. No.	Part No.	DESCRIPTION
1		Freezer Door (Includes Item 8 And Dispenser Front Parts)
	2171588	White
	2171589	Almond
2	1107215	Handle Assembly
3	1107341	End Cap (2)
4	489084	Screw
5	1107651	Spacer, Handle
6	489075	Screw (2)
7	2156016	Shelf Bin (4)
8	2159078	Door Gasket, Magnetic (Service)
9		Insert, Handle
	1117948	White
	1117949	Almond
10	2157603	Trim, Door Shelf
11	2156006	End Cap
12	489422	Screw
13	2156145	Chute, Ice
14	2155313	Door Closer, Upper Cam
15	489367	Screw
16	2155331	Bracket, Door Stop
17	1107243	Retainer, Insert
18	1117952	Retainer, Insert
19	1119062	Trim, Door

DISPENSER FRONT PARTS

For Models: KSRS27QAWH10, KSRS27QAAL10

(White) (Almond)

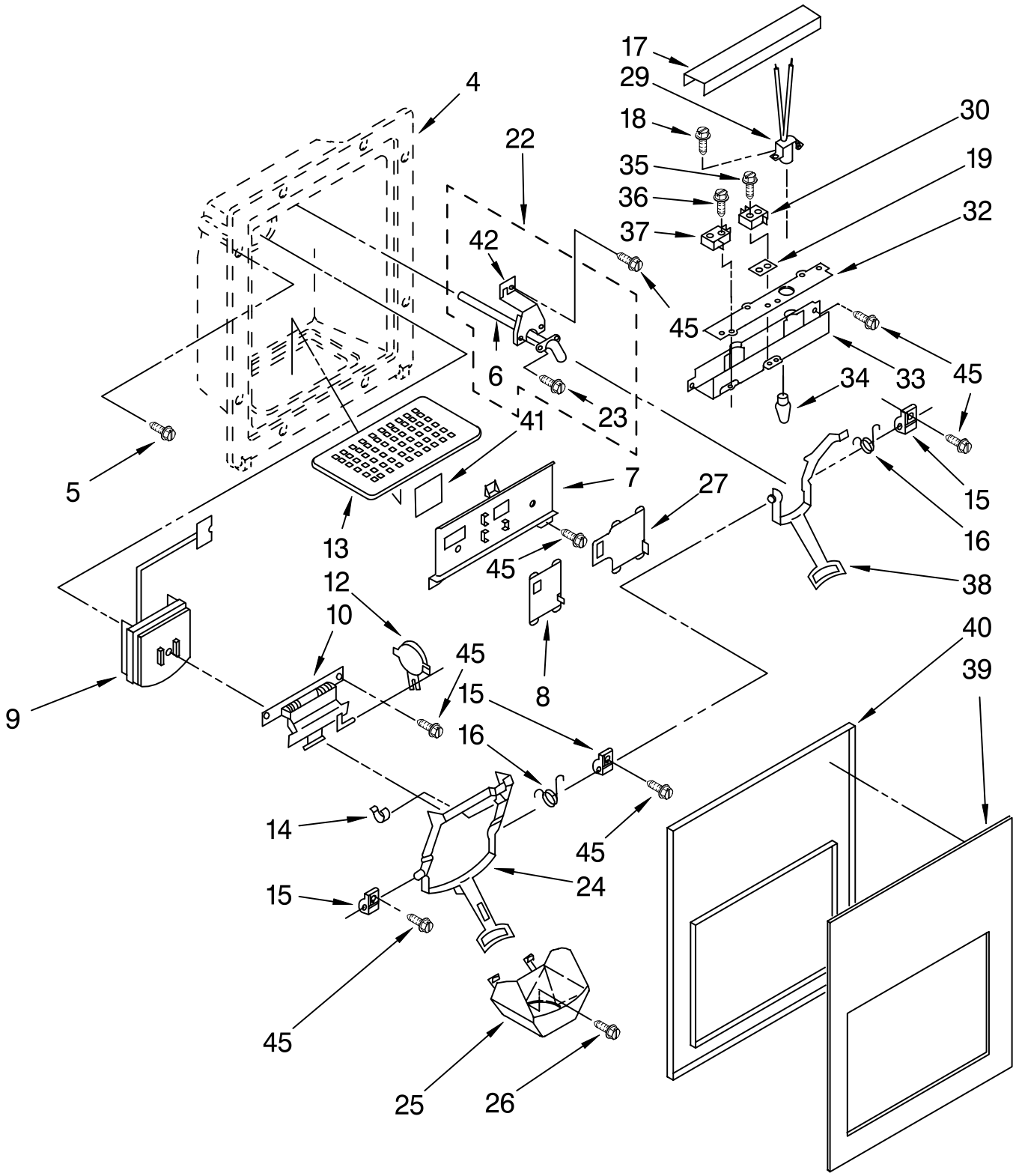

FOR ORDERING INFORMATION REFER TO PARTS PRICE LIST

DISPENSER FRONT PARTS

For Models: KSRS27QAWH10, KSRS27QAAL10

(White) (Almond)

Illus. No.	Part No.	DESCRIPTION
4		Housing, Dispenser (Not a Servicable Item)
5	488687	Screw
6		Tube, Water (See Item #22)
7		Frame, Slides
	2152717	White
	2152718	Almond
8		Slide, Cube/Crush Switch
	2152720	White
	2152721	Almond
9	2157650	Ice Door
10	2157651	Door Mechanism Assembly
12	1120581	Mechanism Delay
13		Grille, Overflow
	1126120	White
	1126121	Almond
14	987917	Clip, Bearing (2)
15	983697	Bearing, Lever (3)
16	983696	Spring, Lever (2)
17	2147165	Shield, Wiring
18	488500	Screw
19	625834	Spacer
22	2155018	Water Fitting Assembly (Includes Water Tube)
23	487916	Screw
24		Lever Assembly, Ice Dispenser
	2155815	White
	1125972	Almond
25		Guide, Ice
	1124730	White
	1126026	Almond
26	488892	Screw
27		Slide, Light Switch
	2152726	White
	2152727	Almond
29	2147131	Lamp Holder
30	2162361	Switch
32	2147164	Insulator, Control Bracket
33	2147163	Bracket, Control
34	851389	Bulb, Light
35	488361	Screw (2)
36	489155	Screw,
37	313125	Switch
38		Lever Assembly, Water Dispenser
	2159199	White
	2159198	Almond
39		Insert, Cover
	1125798	White
	1125801	Almond
40		Cover, Housing (Includes Item 39)
	1125673	White
	1125805	Almond
41	2147172	Heat Shield, Frame
42	987049	Bracket, Water
45	489000	Screw

UNIT PARTS

For Models: KSRS27QAWH10, KSRS27QAAL10

(White) (Almond)

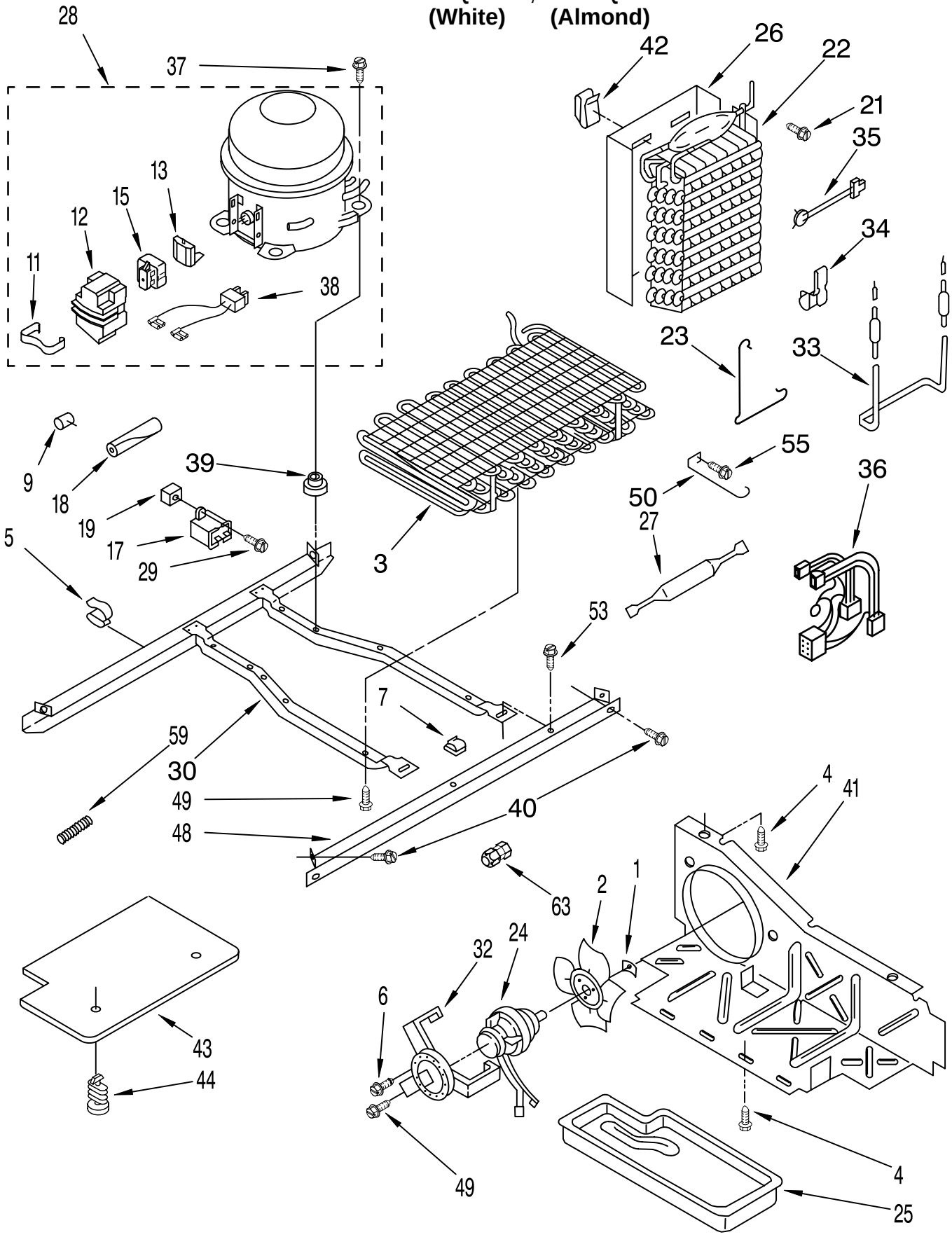

FOR ORDERING INFORMATION REFER TO PARTS PRICE LIST

UNIT PARTS

For Models: KSRS27QAWH10, KSRS27QAAL10

(White) (Almond)

Illus. No.	Part No.	DESCRIPTION
1	486692	Speed Nut
2	1108179	Fan, Blade
3	2164504	Condenser Assembly
4	489337	Screw
5	2155658	Clip, Wire
6	489019	Screw
7	934011	Clip, Tube (3)
9	2158826	Dampener
11		Strap
	943322	Production
	938384	Service
12		Cover
	1105055	Production
	1108115	Service
13		Overload
	2162218	Production (Includes Relay)
	2154761	Service (Includes Relay)
15		Relay (See Overload)
17		Running Capacitor
	1114291	Production
	2154565	Service
18	2161302	Sleeve
19	509812	Screw Grommet
21	489242	Screw
22	2164519	Evaporator
23	2161324	Clamp
24	2154735	Fan, Motor
25	1110674	Tray, Evaporator
26	2149294	Heat Shield
27	2154002	Drier
28	2154562	Compressor (Includes Items 11, 12, 13, 15, 17 & 38) (Also Order 876765 Tube Kit)
29	488687	Screw
30	2157396	Unit Mounting Frame
32	2162062	Fan, Motor Bracket
33	2161323	Heater, Defrost
34	2161330	Clip
35	2161331	Bi−Metal, Defrost
36	2149199	Unit Harness
37	489387	Screw
38	1127675	Wire, Connector
39		Grommet (4)
	2162067	Production
	1100826	Service
40	489340	Screw
41	2149128	Air Baffle
42	2155547	Clip, Heat Shield
43	2161363	Unit Cover, Bottom
44	489396	Clip
48	1127906	Unit Mounting Rail
49	488624	Screw
50	1110663	Guard, Fan
53	489339	Screw
55	488649	Screw
59	983659	Spring−Tube
63	2150347	Union

Following Parts Not Illustrated and Optional Parts Not Included

978025	Valve, Access (1/4")
978026	Valve, Access (5/16")
978027	Valve, Access (3/8")
978028	Valve, Access (1/2")
978029	Valve, Access (5/8")
978030	Valve, Access (3/4")
876764	Valve, Access (3/16")

REFRIGERANT CHARGE

6.5 oz.

Production Compressor Requires Production Electrical Components.
Service Compressor Requires Service Electrical Components.
For Further Information, Refer to Filmcard 19.1.

ICEMAKER PARTS

For Models: KSRS27QAWH10, KSRS27QAAL10

(White) (Almond)

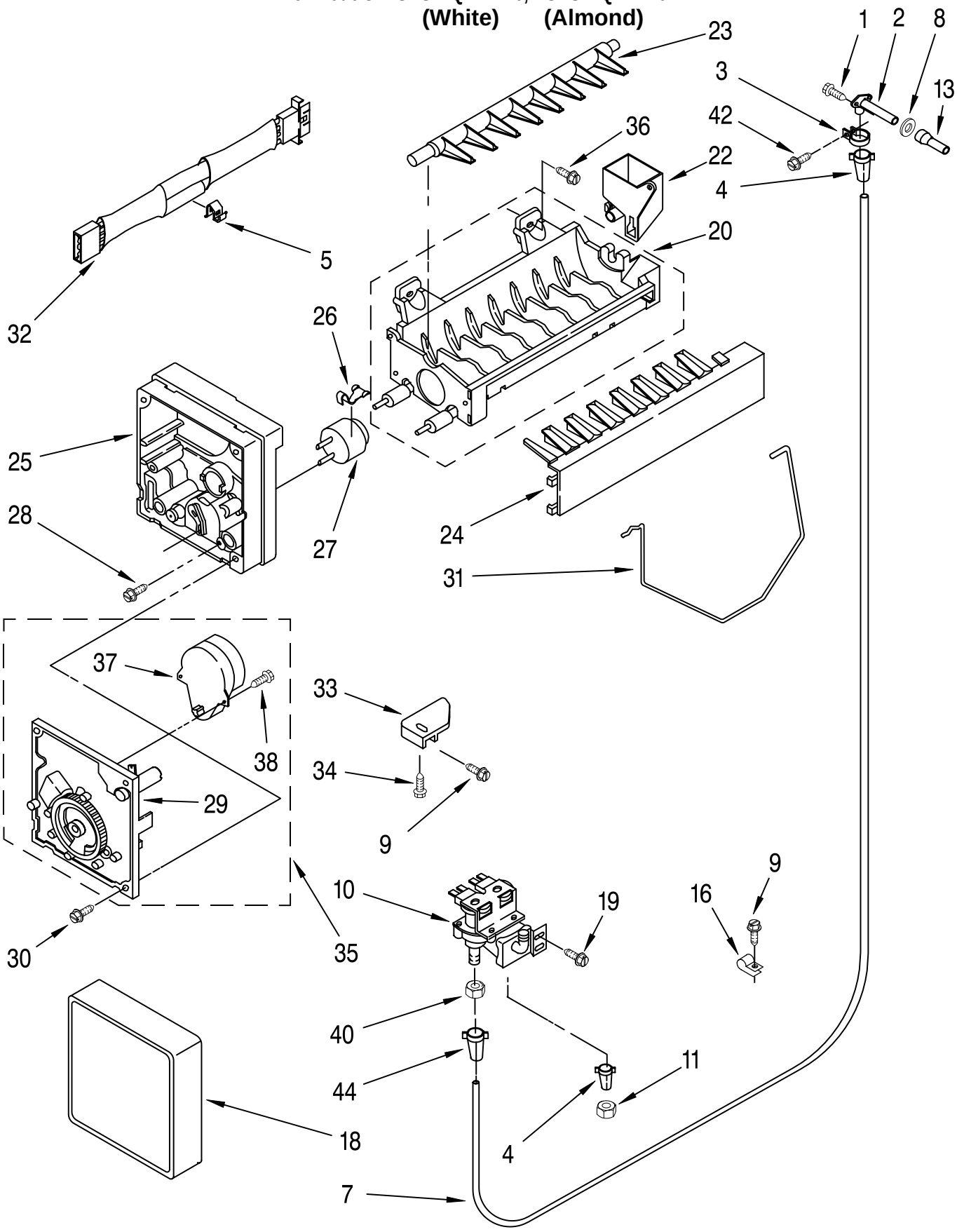

FOR ORDERING INFORMATION REFER TO PARTS PRICE LIST

ICEMAKER PARTS

For Models: KSRS27QAWH10, KSRS27QAAL10

(White) (Almond)

Illus. No.	Part No.	DESCRIPTION
1	489084	Screw
2	836489	Fitting, Water Tube
3	488878	Clamp, Tube
4	841707	Insert, Tube
5	628379	Clip, Fuse
7	2155294	Tube, Water
8	1106508	Seal, Gasket
9	489242	Screw
10	2002182	Valve, Solenoid
11	627018	Nut, Compression
13	2155247	Tube, Water Inlet
16	489385	Clamp, Tube
18	628355	Cover
19	488649	Screw
20	628228	Mold & Heater Assembly (Also Order 542638 Silicone Grease)
22	628356	Bearing & Inlet
23	627843	Ejector
24	627788	Ice Striper
25	627790	Support
26	627796	Retainer, Thermostat
27	628397	Thermostat (Also Order 542369 Cement Alumilastic)
28	489322	Screw,
29	628357	Motor Module
30	489276	Screw
31	2171593	Shut Off Arm
32	628256	Harness, Wiring
33	628320	Bracket
34	489365	Screw
35	628366	Module Assembly (Includes Items 29, 37 & 38)
36	488208	Screw
37	628258	Motor
38	489136	Screw
40	1129179	Nut, Compression
42	488886	Screw
44	1129177	Insert, Tube
100	4211173	Complete Icemaker Assembly

AIR FLOW PARTS

For Models: KSRS27QAWH10, KSRS27QAAL10
(White) (Almond)

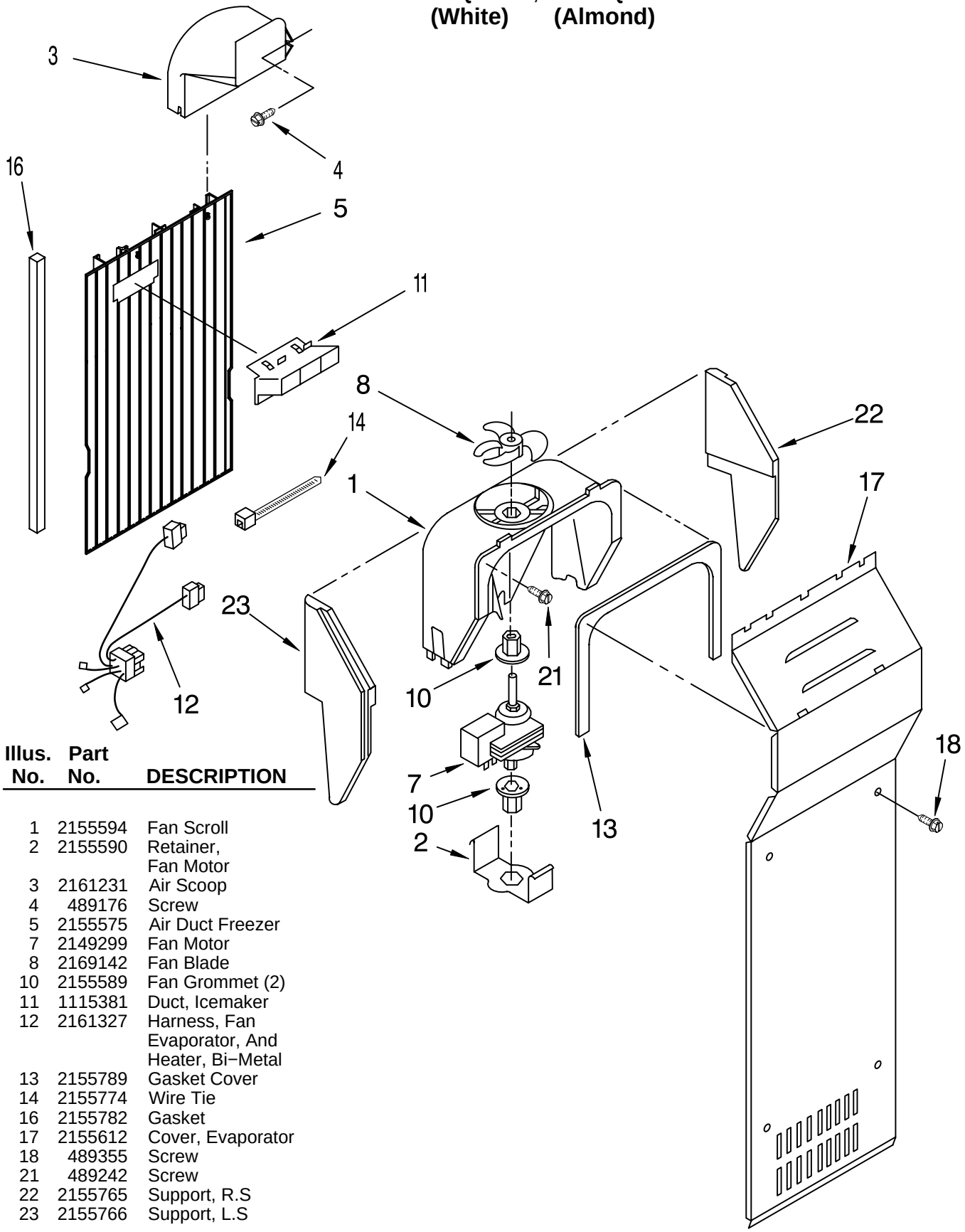

Illus. No.	Part No.	DESCRIPTION
1	2155594	Fan Scroll
2	2155590	Retainer, Fan Motor
3	2161231	Air Scoop
4	489176	Screw
5	2155575	Air Duct Freezer
7	2149299	Fan Motor
8	2169142	Fan Blade
10	2155589	Fan Grommet (2)
11	1115381	Duct, Icemaker
12	2161327	Harness, Fan Evaporator, And Heater, Bi−Metal
13	2155789	Gasket Cover
14	2155774	Wire Tie
16	2155782	Gasket
17	2155612	Cover, Evaporator
18	489355	Screw
21	489242	Screw
22	2155765	Support, R.S
23	2155766	Support, L.S

FOR ORDERING INFORMATION REFER TO PARTS PRICE LIST

CONTROL PARTS

For Models: KSRS27QAWH10, KSRS27QAAL10
(White) (Almond)

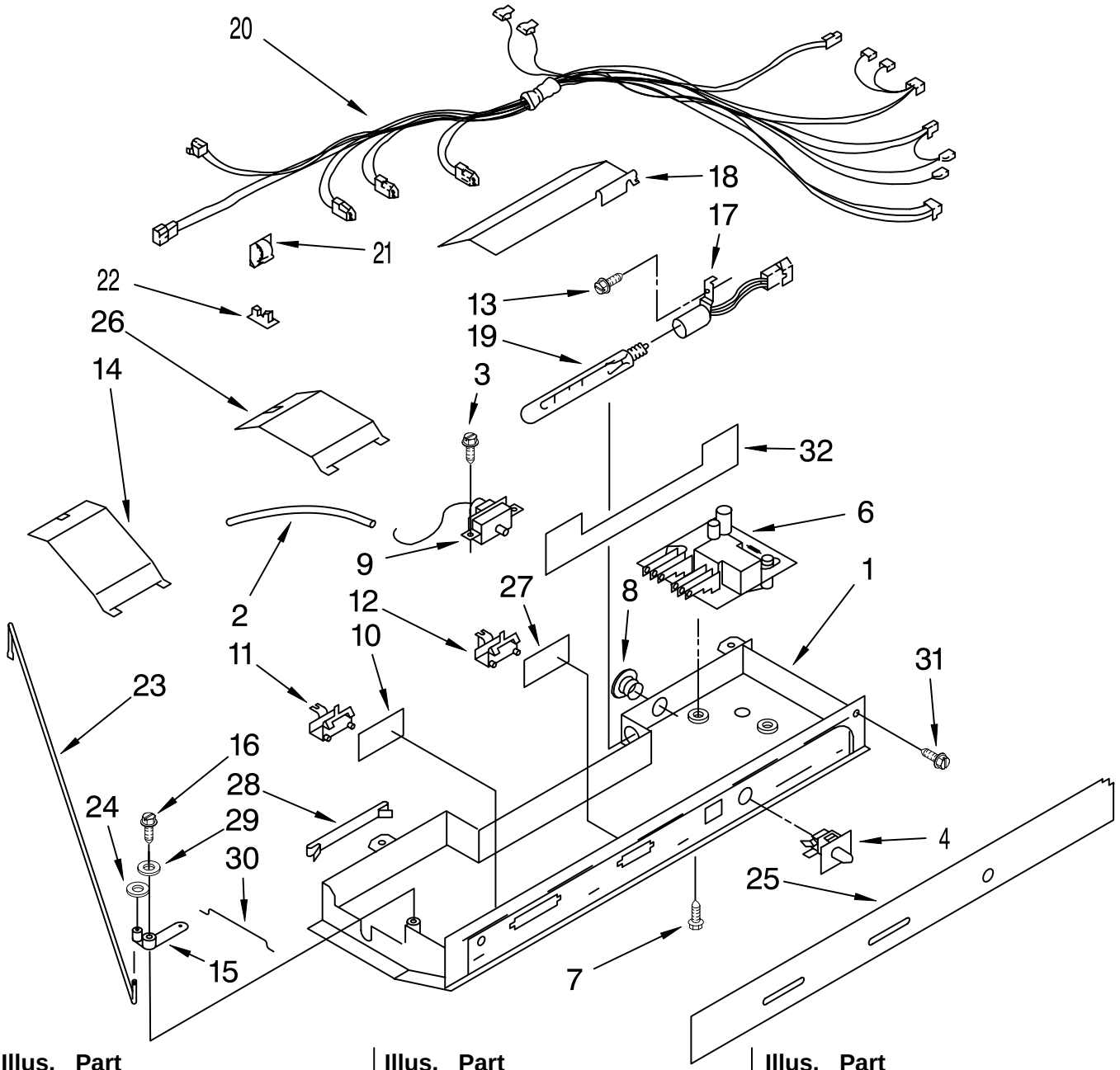

Illus. No.	Part No.	DESCRIPTION
1	2169150	Control Box
2	1115241	Tube Barrier, Thermostat
3	489214	Screw
4	1123923	Light Switch
6	2169267	Adaptive Defrost Control
7	489398	Screw (2)
8	940014	Hole Plug
9	2161282	Thermostat Assembly
10	1126028	Window
11	1125592	Slide, Air Control
12	1125591	Slide, Thermostat
13	489242	Screw
14	1118072	Light Bar
15	2161306	Pivot Arm
16	627068	Screw
17	1110690	Light Socket
18	1118033	Heat Shield
19	548049	Light Bulb
20	2162461	Control Box Harness
21	1115374	Clip, Wiring
22	1115375	Clip, Wiring
23	2161308	Connecting Rod
24	489391	Fastener, Push−On
25	2155695	Escutcheon, Control Box
26	1126089	Light Bar
27	1126027	Window
28	1125811	Clip, Control Box
29	489203	Spring Washer
30	2161307	Connecting Rod (Short)
31	489290	Screw (4)
32	1127141	Heat Shield

FOR ORDERING INFORMATION REFER TO PARTS PRICE LIST