fridgemaster

How to use your new FREEZER

Model MUZ4860MF
MUZ4860MFS
MUZ4860MFB

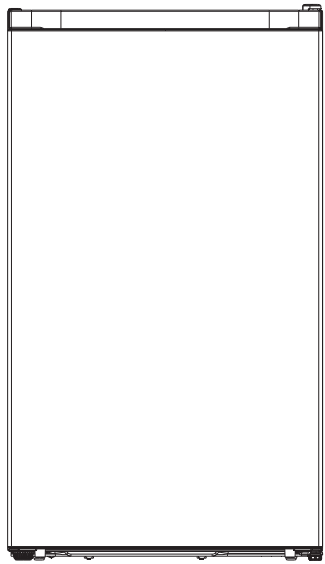

Contents

Safety and warning information.....3
Parts and features.....11
Installing your new appliance.....12
Reversing the door.....13
Control panel.....14
Using your appliance.....14
Helpful hints and tips.....16
Cleaning and care.....16
Troubleshooting.....18
Disposal of the appliance 19

Safety and warning information

Your safety and the safety of others are very important.

We have provided many important safety messages in this manual and on your appliance. Always read and obey all safety messages.



This is the safety alert symbol.
This symbol alerts you to potential hazards that can kill or hurt you and others. All safety messages will follow the safety alert symbol and either the word "DANGER," "WARNING" or "CAUTION."
These words mean:

DANGER An imminently hazardous situation. You could be killed or seriously injured if you don't immediately follow instructions.

WARNING A potentially hazardous situation which, if not avoided, could result in death or serious bodily injury.

CAUTION A potentially hazardous situation which, if not avoided, may result in moderate or minor injury.

All safety messages will tell you what the potential hazard is, tell you how to reduce the chance of injury, and tell you what can happen if the instructions are not followed.

Safety and warning information

For your safety and correct usage, before installing and first using the appliance, read this user manual carefully, including its hints and warnings. To avoid unnecessary mistakes and accidents, it is important to make sure that all people using the appliance are thoroughly familiar with its operation and safety features. Save these instructions and be sure that they remain with the appliance if it is moved or sold, so that anyone using it throughout its life, will be properly informed on its usage and safety notices.

For the safety of life and property, keep the precautions of these user's instructions as the manufacturer is not responsible for damages caused by omission.

Safety for children and others who are vulnerable people

• According to EN standard

This appliance can be used by children aged from 8 years and above and persons with reduced physical, sensory or mental capabilities or lack of experience and knowledge if they have been given supervision or instruction concerning use of the appliance in a safe way and understand the hazards involved. Children shall not play with the appliance. Cleaning and user maintenance shall not be made by children without supervision. Children aged from 3 to 8 years are allowed to load and unload refrigerating appliances.

• According to IEC standard

This appliance is not intended for use by persons (including children) with reduced physical sensory or mental capabilities, or lack of experience and knowledge, unless they have been given supervision or instruction concerning use of the appliance by a person responsible for their safety.

• Children should be supervised to ensure that they do not play with the appliance.

• Keep all packaging away from children as there is risk of suffocation.

• If you are discarding the appliance, pull the plug out of the socket, cut the connection cable (as close to the appliance as you can) and remove the door to prevent children playing from suffering an electric shock or from closing themselves inside it.

• If this appliance, featuring a magnetic door seals, is to replace an older appliance having a spring lock (latch) on the door or lid, be sure to make the spring lock unusable before you discard the old appliance. This will prevent it from becoming a death trap for a child.

General safety

• This appliance is intended to be used in household and similar applications such as:

-staff kitchen areas in shops, offices and other working environments;
-farm houses and by clients in hotels, motels and other residential type environments;
-bed and breakfast type environments;
-catering and similar non-retail applications.

• Do not store explosive substances such as aerosol cans with a flammable propellant in this appliance.

• If the supply cord is damaged, it must be replaced by the manufacturer, its service agent or similarly qualified persons in order to avoid a hazard.

• WARNING — Keep ventilation openings, in the appliance enclosure or in the built-in structure, clear of obstruction.

• WARNING — Do not use mechanical devices or other means to accelerate the defrosting process, other than those recommended by the manufacturer.

• WARNING — Do not damage the refrigerant circuit.

• WARNING — Do not use electrical appliances inside the food storage compartments of the appliance, unless they are of the type recommended by the manufacturer.

• The refrigerant and insulation blowing gas are flammable. When disposing of the appliance, do so only at an authorized waste disposal center. Do not expose to flame.

• WARNING —When positioning the appliance, ensure the supply cord is not trapped or damaged.

• WARNING— Fill with potable water only for the water container.

• WARNING —Do not locate multiple portable socket outlets or portable power supplies at the rear of the appliance.

Refrigerant

The refrigerant isobutene (R600a) is contained within the refrigerant circuit of the appliance, a natural gas with a high level of environmental compatibility, which is nevertheless flammable. During transportation and installation of the appliance, ensure that none of the components of the refrigerant circuit becomes damaged.

• The refrigerant (R600a) is flammable.

WARNING — Refrigerators contain refrigerant and gases in the insulation. Refrigerant and gases must be disposed of professionally as they may cause eye injuries or ignition. Ensure that tubing of the refrigerant circuit is not damage prior to proper disposal.



Warning: Risk of fire/flammable materials

If the refrigerant circuit should be damaged:

• Avoid opening flames and sources of ignition. Thoroughly ventilate the room in which the appliance is situated.

• It is dangerous to alter the specifications or modify this product in any way.

• Any damage to the cord may cause a short circuit, fire, and/or electric shock.

Electrical safety

The power cord must not be lengthened.

• Make sure that the power plug is not crushed or damaged. A crushed or damaged power plug may overheat and cause a fire.

• Make sure that you can access the main plug of the appliance.

• Do not pull the main cable.

• If the power plug socket is loose, do not insert the power plug. There is a risk of electric shock or fire.

• You must not operate the appliance without the interior lighting lamp cover.

• The fridge is only applied with power supply of single phase alternating current of 220~240V/50Hz. If fluctuation of voltage in the district of user is so large that the voltage exceeds the above scope, for safety sake, be sure to apply A.C. Automatic voltage regulator of more than 350W to the fridge. The fridge must employ a special power socket instead of common one with other electric appliances. Its plug must match the socket with ground wire.

Daily use

• Do not store flammable gases or liquids in the appliance. There is a risk of an explosion.

• Do not operate any electrical appliances in the appliance (e.g. electric ice cream makers, mixers etc.).

• When unplugging always pull the plug from the mains socket, do not pull on the cable.

• Do not place hot items near the plastic components of this appliance.

• Store pre-packed frozen food in accordance with the frozen food manufacture's instructions.

• The appliances manufactures storage recommendations should be strictly adhered to. Refer to relevant instructions for storage.

• Do not place carbonated or fizzy drinks in the freeze compartment as it creates pressure on the container, which may cause it to explode, resulting in damage to the appliance.

• Frozen food can cause frost burns if consumed straight from the freezer compartment.

• Do not place the appliance in direct sunlight.

• Keep burning candles, lamps and other items with naked flames away from the appliance so that do not set the appliance on fire.

• The appliance is intended for keeping food stuff and/ or beverages in normal household as explained in this instruction booklet The appliance is heavy. Care should be taken when moving it.

• Do not remove nor touch items from the freezer compartment if your hands are damp/wet, as this could cause skin abrasions or frost/freezer burns.

• Never use the base, drawers, doors etc. to stand on or as supports.

• Frozen food must not be refrozen once it has been

thawed out.

• Do not consume ice popsicles or ice cubes straight from the freezer as this can cause freezer burn to the mouth and lips.

• To avoid items falling and causing injury or damage to the appliance, do not overload the door racks or put too much food in the crisper drawers.

• WARNING - Food needs to be packed into bags before it is put into the refrigerator. Liquids need to be stored in bottles or capped containers in order to avoid a spill, as the design structure of the product is not easy to clean.

• This refrigerating appliance is not intended to be used as a built-in appliance.

Caution!
Care and cleaning

• Before maintenance, switch off the appliance and disconnect the mains plug from the mains socket.

• Do not clean the appliance with metal objects, steam cleaner, ethereal oils, organic solvents or abrasive cleansers.

• Do not use sharp objects to remove frost from the appliance. Use a plastic scraper.

Installation Important!

• For electrical connection carefully, follow the instructions given in this manual.

• Unpack the appliance and check if there are damages on it. Do not connect the appliance if it is damaged. Report possible damages immediately to

the place you bought it. In this case retain packing.

• It is advisable to wait at least four hours before connecting the appliance to allow the oil to flow back in the compressor.

• Adequate air circulation should be around the appliance, lacking this leads to overheating. To achieve sufficient ventilation, follow the instructions relevant to installation. Wherever possible the back of the product should not be too close to a wall to avoid touching or catching warm parts (compressor, condenser) to prevent the risk of a fire, follow the instructions relevant to installation.

• The appliance must not be locate close to radiators or cookers.

• Make sure that the mains plug is accessible after the installation of the appliance

Service

• Any electrical work required to do the servicing of the appliance should be carried out by qualified electrician or competent person.

• This product must be serviced by an authorized Service Center, and only genuine spare parts must be used.

1. If the appliance is Frost Free.
2. If the appliance contains freezer compartment.

Parts and Features

View of the appliance

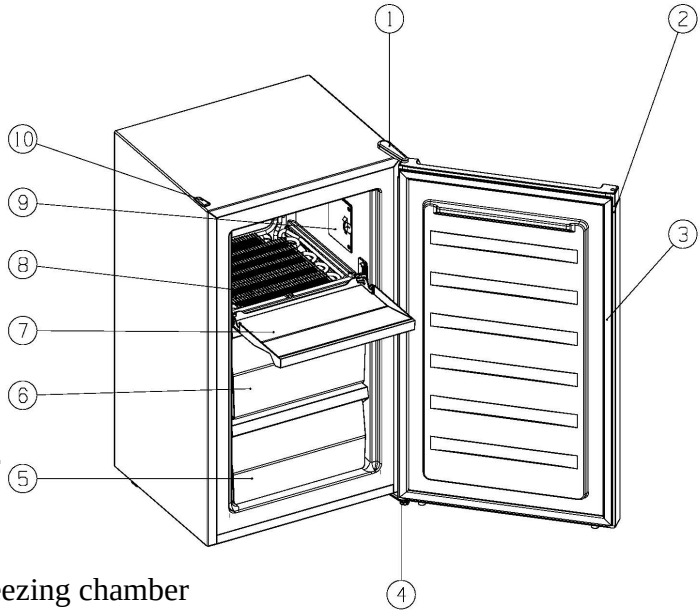

① upper hinge cover

② freezing door

③ gasket part

④ lower hinge parts

⑤ freezer lower drawer

⑥ freezer middle drawer

⑦ drawer panel

⑧ evaporator parts in freezing chamber

⑨ controller part

⑩ screw hole cover

Note: Features may vary depending on model. Not all models will have features listed.
Note: To get the best energy efficiency of this product, please place all shelves, drawers on their original position as the illustration above.

Installing Your New Appliance

Cleaning before use

• Before using the appliance for the first time, wash the interior and all internal accessories with lukewarm water and neutral soap in order to remove the typical smell of a brand new product, then dry thoroughly.

Important! Do not use detergents or abrasive powders, as these will damage the finish.

Installation Positioning

⚠ Warning!

Before installing, read the instruction carefully for your safety and the correct operation of appliance.

• Position the appliance away from sources of heat such as stoves, radiators, direct sunlight, etc.

• Maximum performance and safety are guaranteed by maintaining the correct indoor temperature for the class of unit concerned, as specified on the rating plate.

• This appliance performs well from N to T.
The appliance may not work properly if it is left for a longer period at a temperature above or below the indicated range.

Climate class	Ambient temperature
SN	+10°C to +32°C
N	+16°C to +32°C
ST	+16°C to +38°C
T	+16°C to +43°C

Appliances must not be exposed to rain. Sufficient air must be allowed to circulate in the low rear section of the appliance, as poor air circulation can affect performance. Built-in appliances should be positioned away from heat sources such as heaters and direct sunlight.

Leveling

• The appliance should be level in order to eliminate vibration. To make the appliance level, it should be upright and both adjusters should be in stable contact with the floor. You can also adjust the level by unscrewing the appropriate level adjustment in the front (use your fingers or a suitable spanner).

Electrical connection

⚠ CAUTION

Any electrical work required to install this appliance should be carried out by qualified or authorized personnel.

⚠ WARNING

This appliance must be grounded. The manufacturer declines any liability should these safety measures not be observed.

Ventilation of appliance

In order to improve efficiency of the cooling system and save energy, it is necessary to maintain good ventilation around the appliance for the dissipation of heat. For this reason, sufficient clear space should be available around the refrigerator.
Suggest: It is advisable for there to be 50-70mm of space from the back to the wall, at least 100mm from its top, at least 100mm from its side to the wall and a clear space upfront to allow the doors to open 135°. As shown in follow diagrams.

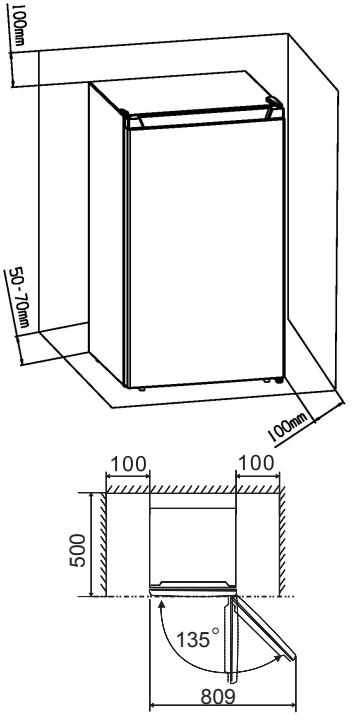

Reversing the door

The side at which the door opens can be changed from the right side (as supplied) to the left side, if the installation site requires.

Tools you will need:

1. 8mm socket driver



2. Cross-shaped screwdriver



3. Putty knife or thin-blade screwdriver



Before you start lay the refrigerator on it's back in order to gain access to the base, you should rest it on soft foam packaging or similar material to avoid damaging the cooling pipes at the rear of the refrigerator.

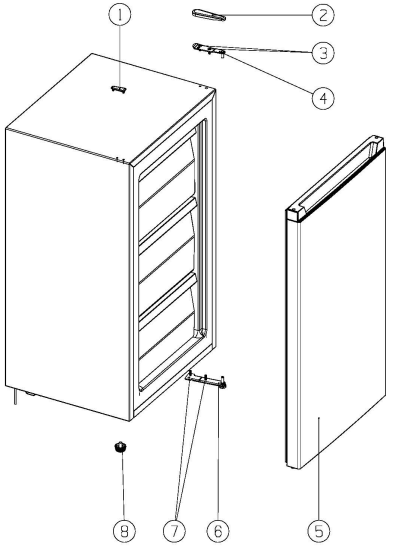

① screw hole cover	② upper hinge cover
③ special flange self-tapping screw	④ upper hinge part
⑤ freezing door	⑥ lower hinge parts
⑦ special flange self-tapping screw	⑧ supporting leg

1. Open the appliance door and unhinge and remove all fittings from inside the appliance.
2. Remove the upper hinge cover (2).
3. Remove the two screws (3) that connect the upper hinge part (4) on the right side of the cabinet top.
4. Carefully lift the door and place it on a padded surface to prevent scratching.
5. Remove the screw hole cover (9) and transfer it to the uncovered hole on the right side of the unit. Be sure to press the button firmly into the hole.
6. Remove the two screws (7) that hold the lower hinge parts (6) on the right side of the unit.
7. Remove the supporting leg (8) and transfer it to the right side as shown in the adjacent figure.
8. Set the door into its new place making sure the pin enters the bushing at the lower frame section (hole).
9. Secure the upper hinge part (4) previously removed in step 4 on the left side of the unit. Make sure the pin enters the bushing on the upper frame section (hole).
10. Loosely secure the lower hinge parts (6) and do not tighten the bolts until the door is in the closed position and leveled.
11. Insert the screw hole cover (1) on the uncovered holes (right side).
12. Replace the upper hinge cap (2).
13. Turn the appliance upright again.
14. Open the appliance doors and attach all fittings.

Control panel

Starting up and temperature regulation

• Insert the plug of the connection lead into the plug socket with a protective grounding contact. When the refrigerator compartment door is opened, the internal lighting is switched on.

• The temperature selector knob is located on the RH side of the refrigerator compartment.

Setting "1" means:

Highest temperature, warmest setting.

Setting "7" means:

Lowest temperature, coldest setting.

Important!

• Normally we advise you select a setting of 4, if you want the temperature warmer or colder please turn the knob to higher or lower setting accordingly. When you turn the knob to a higher setting, this can lead to more energy saving. Otherwise, it would result high consumption of energy.

NOTE: High temperature setting will accelerate food waste.

• For optimum food preservation, a medium setting is generally the most suitable.

Important! High ambient temperatures (e.g. on hot summer days) and a cold setting (position 6 to 7) may cause the compressor to run continuously or even non-stop.

Reason: when the ambient temperature is high, the compressor must run continuously to maintain the low temperature in the appliance.

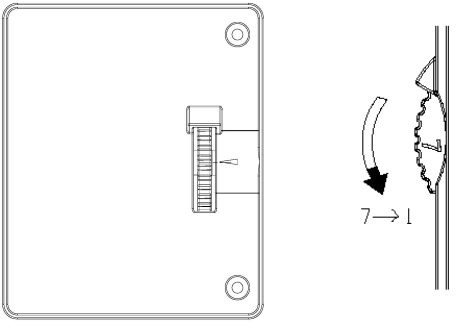

Using your appliance

Accessories

Movable shelves/trays

• Various glass or plastic storage shelves or wire trays are included with your appliance different models have different combinations and different models have different quality.

• The walls of the refrigerator are equipped with a series of runners so that the shelves can be positioned as desired.

Positioning the door shelves

• To permit the storage of food packages of various sizes, the door shelves can be placed at different heights .

• To make these adjustments proceed as follows gradually pull the shelf in the direction of the arrows until it comes free, then repositions as required .

To avoid contamination of food, please respect the following instructions:

• Opening the door for long periods can cause a significant increase of temperature in the compartments of the appliance.

• Clean regularly surfaces that can come in contact with food and accessible drainage systems.

• Store raw meat and fish in suitable containers in the refrigerator, so that it is not in contact with or drip onto other food.

• Two-star frozen-food compartments are suitable for storing pre-frozen food, storing or making ice cream and making ice cubes.

• One-, two- and three-star compartments are not suitable for the freezing of fresh food.

• If the refrigerating appliance is left empty for long periods, switch off, defrost, clean, dry, and leave the door open to prevent mold developing within the appliance.

Compliance is checked by inspection.

Order	Compartments Type	Target storage temp.[°C]	Appropriate food
1	Fridge	+2~+8	Eggs, cooked food, packaged food, fruits and vegetables, dairy products, cakes, drinks and other foods which are not suitable for freezing.
2	(***)*-Freezer	≤-18	Seafood (fish, shrimp, shellfish), freshwater aquatic products and meat products (recommended for 3 months , the longer the storage time, the worse the taste and nutrition), suitable for frozen fresh food.
3	***-Freezer	≤-18	Seafood (fish, shrimp, shellfish), freshwater aquatic products and meat products (recommended for 3 months, the longer the storage time, the worse the taste and nutrition), are not suitable for frozen fresh.
4	**-Freezer	≤-12	Seafood (fish, shrimp, shellfish), freshwater aquatic products and meat products (recommended for 2 months, the longer the storage time, the worse the taste and nutrition), are not suitable for frozen fresh. food.
5	*-Freezer	≤-6	Seafood (fish, shrimp, shellfish), freshwater aquatic products and meat products (recommended for 1 month, the longer the storage time, the worse the taste and nutrition).
6	0-star	-6~0	Fresh pork, beef, fish, chicken, some packaged processed foods, etc. (Recommended to eat within the same day, preferably no later than 3 days) . Partially encapsulated processed foods (non-freezable foods)
7	Chill	-2~+3	Fresh/frozen pork, beef, chicken, freshwater aquatic products, etc. (7 days below 0°C and above 0°C is recommended for consumption within that day, preferably no more than 2 days). Seafood (less than 0°C for 15 days, it is not recommended to store above 0°C)
8	Fresh Food	0~+4	Fresh pork, beef, fish, chicken, cooked food, etc. (Recommended to eat within the same day, preferably no more than 3 days)
9	Wine	+5~+20	red wine, white wine, sparkling wine etc.

Note: please store different foods according to the compartments or target storage temperature of your purchased products.

Helpful hints and tips

Noises during Operation

The following noises are characteristic of refrigeration appliances:

Clicks Whenever the compressor switches on or off, a click can be heard.

Humming As soon as the compressor is in operation, you can hear it humming.

Bubbling When refrigerant flows into thin tubes, you can hear bubbling or splashing noises.

Splashing Even after the compressor has been switched off, this noise can be heard for a short time.

Energy saving tips

• Do not install the appliance near cookers, radiators or other sources of warmth.

• Do not open the door too often or leave the door open any longer than necessary.

• Do not set temperature colder than necessary.

• Make sure the side plates and back plate of the appliance are with some distance from the wall, follow the instructions relevant to installation.

• If sketch map shows the right combination of the drawers, crisper and shelves, do not adjust the combination, it would result in more energy-consuming.

Hints for fresh food refrigeration

To obtain the best performances:

• Do not store warm foods or evaporating liquids in the appliance.

• Do cover or wrap the food, particularly if it has a strong flavor or odor.

• Position food so that air can circulate freely around.

Hints for refrigeration

• Meat (all types): wrap in polythene bags and place on the glass shelf above the vegetable drawer. For safety, store in this way only one or two days at the most.

• Cooked foods, cold dishes, etc…: these should be covered and may be placed on any shelf.

• Butter and cheese: these should be placed in aluminum foil or polythene bags to exclude as much air as possible.

Cleaning and Care

For hygienic reasons the appliance interior, including interior accessories, should be cleaned regularly.

The fridge should be cleaned and maintained at least every two months.

⚠WARNING



Electrical Shock Hazard

The appliance should not be connected to the mains during cleaning. Before cleaning switch the appliance off and remove the plug from the mains, or switch off or turn out the circuit breaker or fuse.

Notice!

• Remove the food from the appliance before cleaning. Store them in a cool place, well covered.

• Never clean the appliance with a steam cleaner. Moisture could accumulate in electrical components.

• Hot vapors can lead to the damage of plastic parts.

• Ethereal oils and organic solvents can attack plastic parts, e.g. lemon juice or the juice from orange peel, butyric acid, cleanser that contain acetic acid. Do not allow such substances to come into contact with appliance parts.

• Do not use any abrasive cleansers.

• Clean the appliance and the interior

accessories with a cloth and lukewarm water. Commercially available dish washing detergents may also be used.

• After cleaning wipe with fresh water and clean dish cloth.

• Accumulation of dust at the condenser increases energy consumption, clean the condenser at the back of the appliance once a year with a soft brush or a vacuum cleaner.

• Check the water drain hole on the rear wall of the refrigerator compartment.

• Clear a blocked drain hole with the aid of something like soft green peg, be careful not to make any damage to the cabinet by sharp things.

• After everything is dry place appliance back into service.

Defrosting

Why defrosting

• Water contained in food or getting into air inside the fridge be opening doors may form a frost layer inside. It will weaken the refrigeration when the frost is thick. While it is more than 10mm thick, you should defrost manually.

Go out of use for a long time

• Remove all refrigerated packages.

• Remove the mains plug or switch off or disconnect the electricity supply.

• Clean thoroughly (see section: Cleaning and Care).

• Leave the door open to avoid the build up of odors.

Note: If the appliance contains freezer compartment.

Troubleshooting

⚠WARNING

Before trouble shooting, disconnect the power supply. Only a qualified electrician of competent person must carry out the trouble shooting that is not in the manual.

Important!
Repairs to refrigerators/freezers may only be performed by competent service engineers. Improper repairs can give rise to significant hazards for the user. If your appliance needs repairing, please contact your specialist dealer or your local Service Center.

PROBLEM	POSSIBLE CAUSE(S)	SOLUTION
Appliance does not work.	Appliance is not switched on.	Switch on the appliance.
	Mains plug is not plugged in or is loose.	Insert mains plug.
	Fuse has blown or is defective.	Check fuse, replace if necessary.
	Socket is defective.	Mains malfunctions are to be corrected by an electrician.
Appliance cools too much.	Temperature is set too cold.	Turn the temperature regulator to a warmer setting temporarily.
The food is too warm.	Temperature is not properly adjusted.	Please refer to the "Control panel" section.
	Door was open for an extended period.	Open the door only as long as necessary.
	A large quantity of warm food was placed in the appliance within the last 24 hours.	Turn the temperature regulation to a colder setting temporarily.
	The appliance is near a heat source.	Please look in the "Installing your new appliance" section.
Heavy build-up of frost, possibly also on the door seal.	Door seal is not air-tight (possibly after reversing the door).	Carefully warm the leaking sections of the door seal with a hair dryer (on a cool setting). At the same time shape the warmed door seal by hand such that it sits correctly.
Unusual noises.	Appliance is not level.	Readjust the feet.
	The appliance is touching the wall or other objects.	Move the appliance slightly.
	A component, e.g. a pipe, on the rear of the appliance is touching another part of the appliance or the wall.	If necessary, carefully bend the component out of the way.
The compressor does not start immediately after changing the temperature setting.	This is normal, no error has occurred.	The compressor starts after a period of time.
Water on the floor or storage shelves.	Water drain hole is blocked.	See the "cleaning and care" section.

Disposal of the appliance

It is prohibited to dispose of this appliance as household waste.

Packaging materials

Packaging materials with the recycle symbol are recyclable. Dispose of the packaging into a suitable waste collection container to recycle it.

Before disposal of the appliance

1. Pull out the mains plug from the mains socket.
2. Cut off the power cord and discard with the mains plug.

⚠WARNING

Refrigerators contain refrigerant and gases in the insulation. Refrigerant and gases must be disposed of professionally as they may cause eye injuries or ignition. Ensure that tubing of the refrigerant circuit is not damage prior to proper disposal.

	Correct Disposal of this product
	This symbol on the product or in its packing indicates that this product may not be treated as household waste. Instead, it should be taken to the appropriate waste collection point for the recycling of electrical and electronic equipment. By ensuring this product is disposed of correctly, you will help prevent potential negative consequences for the environment and human health, which could otherwise be caused by the inappropriate waste handling of this product. For more detailed information about the recycling of this product, please contact your local council your household waste disposal service, or the shop where you purchased the product.

Fridgemaster Technical Helpline and Service Centre-Telephone

0191 387 0804

fridgemaster

FRIDGEMASTER
Unit 2 Meadow Court
Millshaw Lane Leeds,
West Yorkshire,
LS11 8LZ,
United Kingdom

For service and repairs please contact
the Fridgemaster Technical Helpline on:
0191 387 0804
Fridgemaster@0800repair.com

This symbol on the product or in the instructions means that your electrical and electronic equipment should be disposed at the end of its life separately from your household waste. There are separate collection systems for recycling in the EU.
For more information, please contact the local authority or your retailer where you purchased the product.

CE

4210240