Criterion®

USER MANUAL



TOP MOUNT REFRIGERATOR

21.2 CU FT.
CAPACITY

BEFORE USING YOUR PRODUCT:
Please read this manual carefully & follow all safety rules & operating instructions. Keep this manual for future reference.

Model Number:
CUF21C1W

SAVE THESE INSTRUCTIONS

INSIDE VIEW

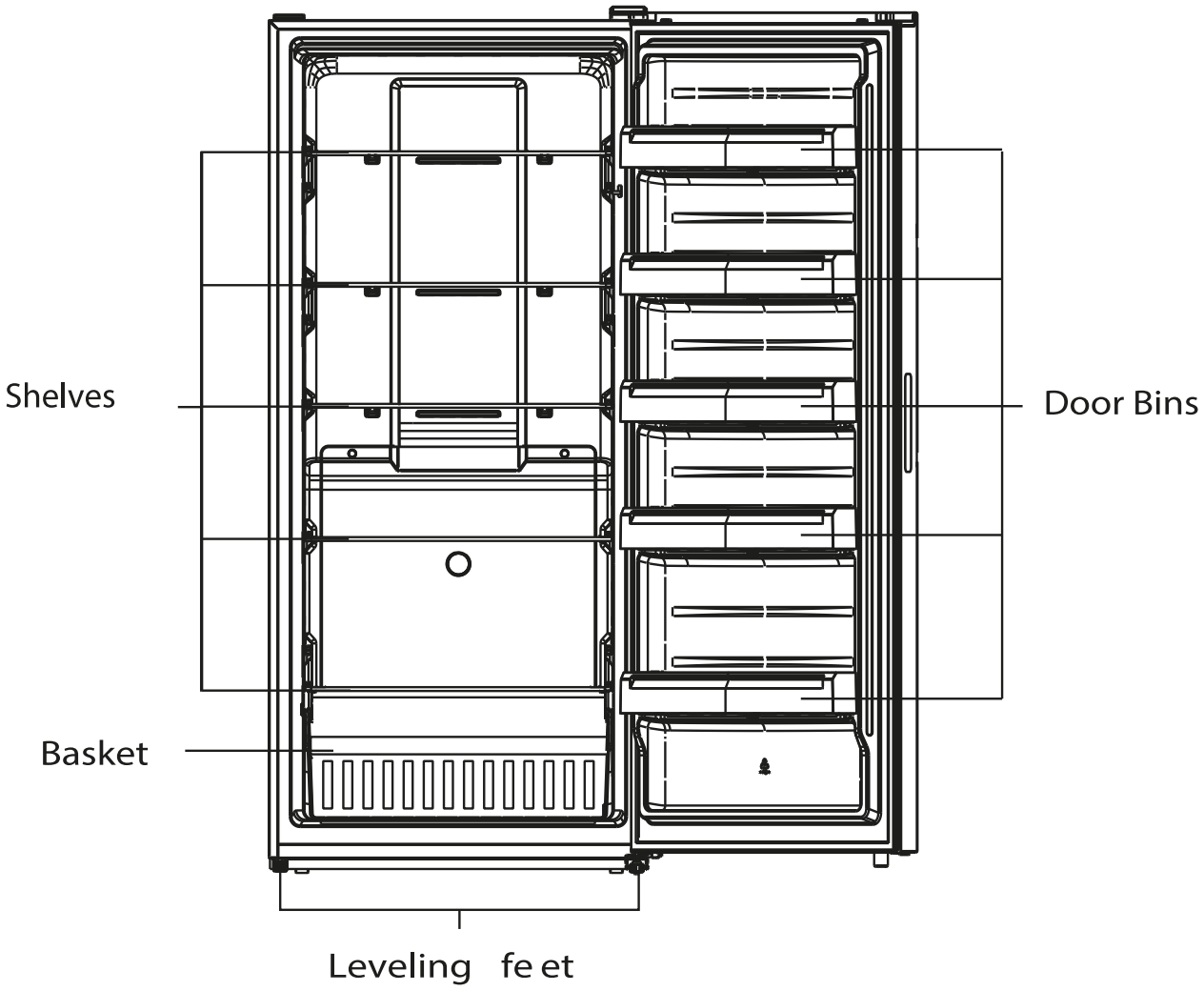

SETTING UP YOUR FREEZER

REVERSING THE UPPER DOOR HINGE

Before reversing the door, please prepare below accessories in the spare parts bag:



Left top door hinge x 1

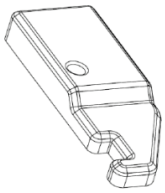

Left top hinge cover x 1



Right top door hinge cover x 1

Necessary Tools (not included):

Philips Screwdriver

Flathead Screwdriver
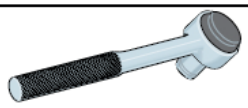
8 mm Socket with Ratchet
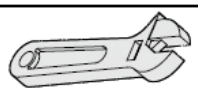
Adjustable Wrench

Pliers

Before you begin, turn the appliance temperature control to OFF and remove the electrical power cord from the wall outlet. Remove any food from the door shelves.

CAUTION:

This procedure will require 2 people to safely perform.

1. Lay the freezer on its back on a padded surface.

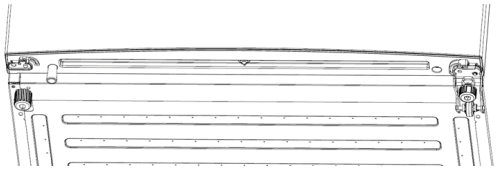

2. Remove the 3 screws (B) holding the bottom hinge (A) to the cabinet with an 8 mm socket with ratchet.

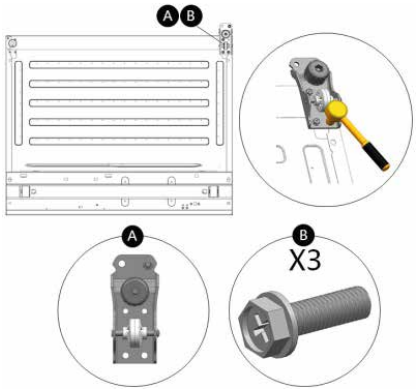

3. Unscrew and insert the hinge pin on the opp osite side of the bottom hinge using an adjustable wrench and pliers.

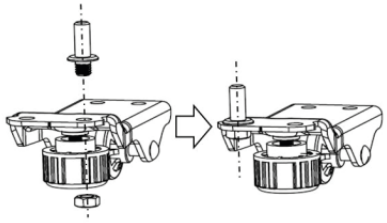

4. Unscrew the left adjustable leveling foot and loosen the screw.

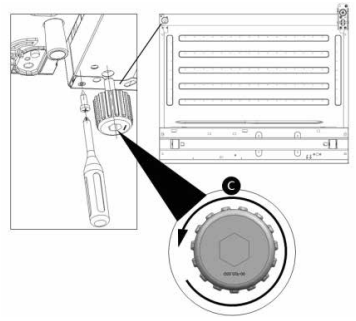

5. Remove the aid-clo ser (F), metal blo ck (G), and the s upp orter (D).

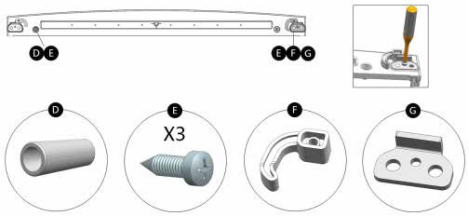

6. Reinstall the aid-closer (F), metal block (G) onto the left side, and the supporter (D) onto the right side.

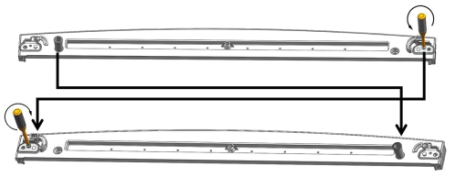

7. Attach the bottom hinge (A) with 3 screws (B) and the adjustable leveling foot (C) on the left side of the cabinet.

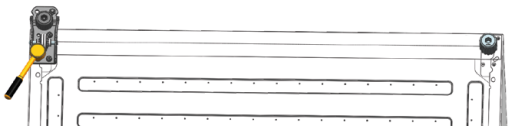

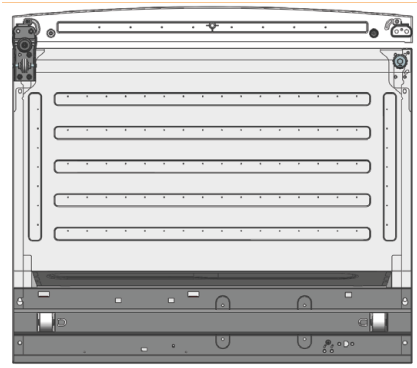

Important Note:

When you screw on the bottom hi nge: Move the door slightly to the left or right to make sure th e hinge hole is aligned with the cabinet hole. Insert the 3 screws by half depth, and then align the hinge and fully tighten.

8. Using an 8 mm socket with a ratchet:

a. Unscrew right top hinge cover a nd left top decorative cov er, and disconn ect the door switch and display.

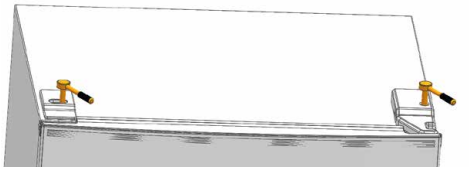

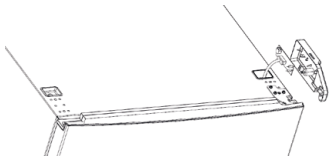

b. Remove the top hinge from the right side.

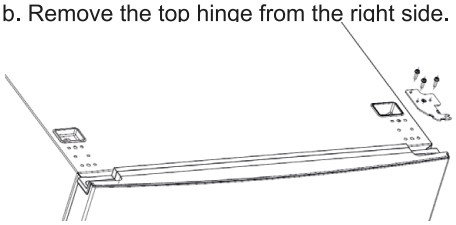

9. Remove the front top decorative door cover, turn the cover (together with the conn ecting wire) 180°and install it.

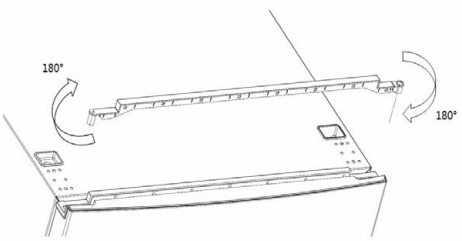

10. Install the top left hinge (provided in the spare parts bag).

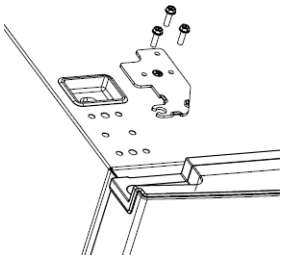

11. Connect the connector of door switch and display, and install the top left hinge cover (provided in the spare parts bag).

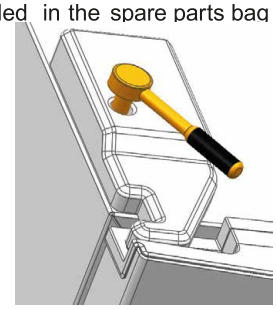

12. Install the PCB in the door hinge cover.

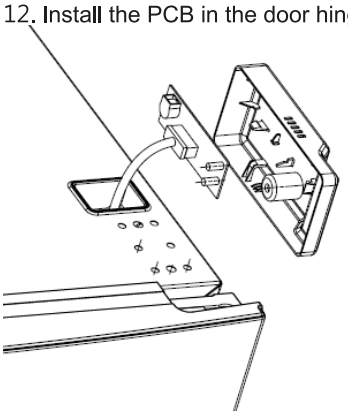

13. Install the door hinge cover (provided in the spare parts bag).

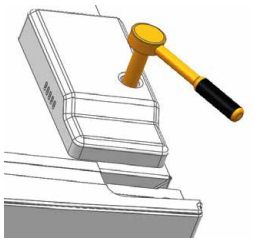

14. Raise the appliance to the upright position. Open and close the door to check if door moves smoothly.



15. Allow 2 hours before plugging the unit back into electrical outlet.

POSITIONING YOUR FREEZER

- Place your freezer in a location that lets the doors open fully and allows for air circulation.
  - The freezer is 74.6 in.(189.5 cm) high, 32.8in.(83.3 cm) wide, and 29.2 in. (74.2 cm) deep.

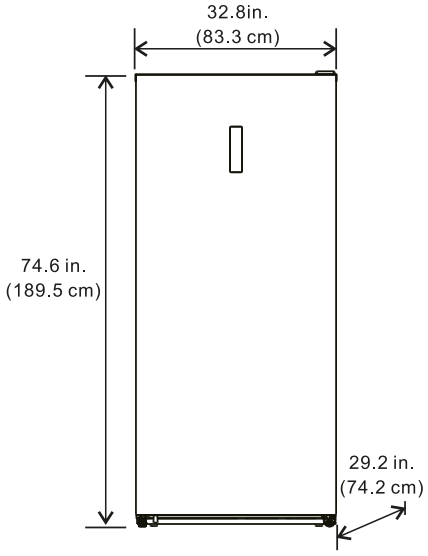

- The door opens at a 135° angle and need 34.0 in.(86.4 cm) in front to open fully.

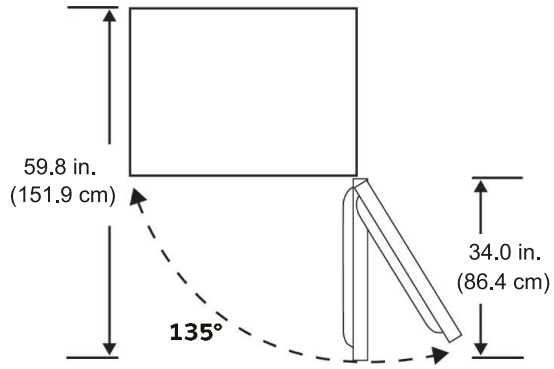

- You must have no less than 2 in. (5 cm) of space to the sides, above, and behind the refrigerator.

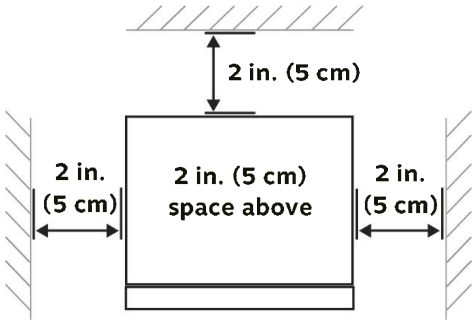

- **Do not place near heat, direct sunlight, or locations where the temperature will rise above 110°F (43°C).**
  Cookers, radiators, out-buildings, or direct sunlight may increase energy use or affect the acrylic coating. In high ambient temperatures, the compressor will not be able to maintain proper temperature inside the refrigerator.
- **Do not place in a location where the temperature will drop below 55°F (13C)**
  The compressor may not be able to maintain proper temperature inside the freezer.
- **Do not place the freezer in moist or watery places.**
  Do not put your freezer in moist places easy to be splashed with water.

- **Place your freezer on a hard, level surface.**

  - To level your freezer , turn its front feet to raise (clockwise) or lower (counterclockwise) them.

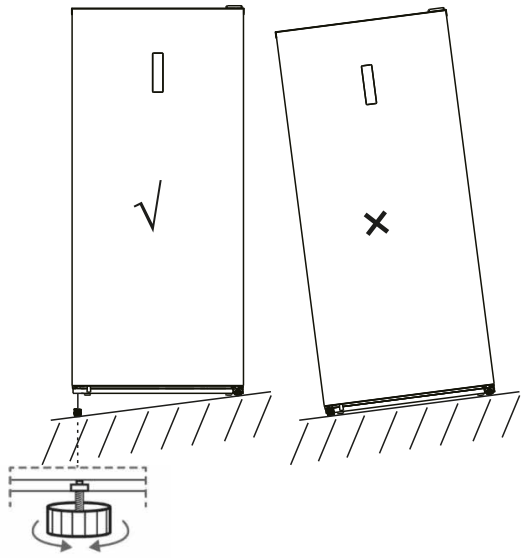

  - If your freezer is not level, the door may not close properly.

- **Your freezer is desiqned only for household use and similar applications.**

  - Staff kitchen areas in shops, offices, and other working environments
  - Farm houses and by clients in hotels, motels, and other residential-type environments;
  - Bed-and-breakfast-type environments
  - Catering and similar non-retail applications

- **Place your freezer in a well-ventilated room.**

ADJUSTING STORAGE ACCESSORIES

To adjust a shelf's height, pull it forward until it can be swiveled up or down and removed, then slide it back into the guides.

TURNING ON YOUR FREEZER

WARNING: Electrical Connections

- This appliance should be properly grounded for your safety.
- This freezer's power cord is equipped with a three-prong plug which connects to standard three-prong wall outlets to minimize the possibility of electrical shock.
- Do not under any circumstances cut or remove the third ground prong from the power cord supplied.
- This freezer requires a standard 115/120V AC 60 Hz electrical grounded outlet with three prongs. Have the wall outlet and circuit checked by a qualified electrician to make sure that the outlet is properly grounded.
- When a standard 2-prong wall outlet is encountered, it is your responsibility and obligation to have it replaced with a properly grounded 3-prong wall outlet.
- The cord should be secured behind the appliance and not left exposed or dangling to prevent accidental injury.
- The appliance should always be plugged into its own individual electrical outlet which has a voltage rating that matches the rating label on the appliance. This provides the best performance and also prevents overloading house wiring circuits that could cause a fire hazard from overheating.
- Never unplug the appliance by pulling the power cord. Always grip the plug firmly and pull straight out from the receptacle.
- Immediately repair or replace all power cords that are frayed or otherwise damaged. Do not use a cord that shows cracks or abrasion damage along its length or at either end. When moving the appliance, be careful not to damage the power cord.

WARNING: Extension Cords

- Because of potential safety hazards under certain conditions, it is strongly recommended that you do not use an extension cord with this appliance.
- If an extension cord is needed, you must use a UL/CUL-listed, 3-wire grounding type appliance extension cord that has a grounding-type plug and outlet and that the electrical rating of the cord be 115 volts and at least 10 amperes.

WARNING: Surge Protectors

- Most electrical appliances use a series of electric control boards to operate. These boards are very susceptible to power surges and could be damaged or destroyed.
- If your freezer is going to be used in an area prone to power surges/outages, it is suggested that you use a power surge protector for all electrical devices/appliances that you use. The surge protector that you select must have a surge block high enough to protect the appliance it is connected to. If you have any questions regarding the type and size of surge protector needed, contact a licensed electrician in your area.
- Damages due to power surges are not considered a manufacturer covered defect and will void your product warranty.

1. After moving your freezer or reversing the doors, wait two hours before turning it on. This reduces the chance of a malfunction in the cooling system from handling and transportation.
2. Plug your freezer's power cord into a grounded power outlet. Your freezer automatically turns on.
3. Set the temperature. See page 10 for more detailed instructions.
4. Let your freezer run for at least four hours. When your freezer has fully chilled, place your food in your freezer compartments.

USING YOUR FREEZER

USING THE CONTROL PANEL

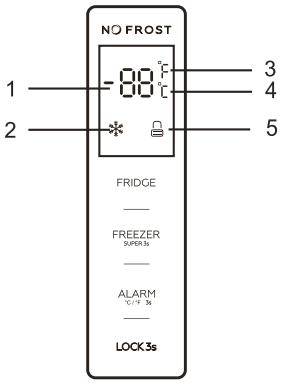

1.0 User interface introduction

FRIDGE: Fridge temperature control of the appliance

FREEZER/SUPER 3s: Temperature control of the appliance. Select and deselect super mode control.

ALARM: Clear door opening alarm.

LOCK: Locking and unlocking.

1.1 LED Display

1. Display window for preset temperature
2. Super mode icon
3. Fahrenheit
4. Celsius
5. Locking and unlocking icon

2.0 Illustration of the buttons

All buttons are valid only in unlocking status.

Short beep after per touching of buttons.

2.1 FRIDGE: temperature control of the appliance available only for user defined mode.

Touching "FRIDGE" button consecutively, the temperature will change in a circle from 2°C (35°F) ~ 8°C (47°F), stop touching and after 5 seconds flashing, temperature is set.

Fridge

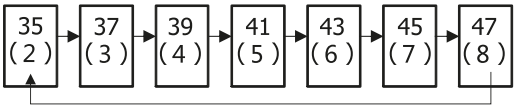

2.2 FREEZER: temperature control of the appliance available only for user defined mode.

Touching "FREEZER" button consecutively, the temperature will change in a circle from -14°C (7°F) ~ -22°C (8°F), stop touching and after 5 seconds flashing, temperature is set.

Freezer

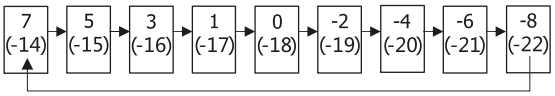

SUPER 3s: select and deselect super mode.

Press "SUPER 3s" button to select super mode when the product is in FREEZER mode. After 5 seconds flashing of super mode icon, super mode is selected.

When super mode is selected, super mode icon will light on and display window will show -25°C (-13°F).

In super mode, touching "FREEZER" button, super mode icon will flash 3 times, but freezer temperature cannot be changed.

To exit Super mode,

-Press "SUPER" button to deselect Super mode,

-Or after 50 hours of super mode without any operation, the refrigerator will automatically stop it and enter into previous setting.

Warning:

In super mode, noise of the appliance may be slightly higher than normal running.

2.3 ALARM: clear door ope ning alarm and high temperature alarm.

Short touching " ALARM" button to clear door opening alarm and hi gh temperature alarm.

2.4 LOCK: Locking and Unlocking

Touching " LOCK" button for 3 seconds to lock the control panel, then the locking and unlocking icon will be "  " .

In locking status, touch any button, the locking and unlocking icon will flash 3 times.

Touching " LOCK" button for 3 seconds to unlock the control panel, then the locking and unlocking icon will be "  " .

In unlocking status, all buttons are available. If no operation in 25 seconds, the control panel will be locked automatically.

3.0 Door opening alarm

If the door keeps opening for 90 seconds , door opening alarm sounds. Close the door to stop the door opening alarm, or short touching " ALARM" button to clear door o pening alarm.

4.0 High temperature alarm

If high internal temperature of the appliance is detected, high temperature alarm will sound , " ht" and detected temperature wil l display alternately on display window. Short touching " ALARM" button to stop door opening al arm.

High temperature display will disappear automatically only if detected temperature goes back to normal.

5.0 Running modes

Freeze Boost Mode

In this mode, the temperature of freezer is automatically set at - 25°C (-13°F). The temperature in freezer will be reduced fastly.

If you plan to freeze a large number food in one time , please select Freeze Boost mode 24 hours ahead.

In this mode, the temperature of fridge is still adjustable. And appliance will go back to previous running mode automatically after 50 hours.

Door open alarm

If door is opened for long time (> 60 seconds) , alarm will rise automatically. Please close the door immediately to save energy.

STORING FOOD

When storing food in either your refrigerator or freezer compartment:

- Let hot food cool to room temperature before storing. This helps prevent the internal temperature from rising, which can result in excess electricity use and frost formation.
- Do not overcrowd food. Instead, leave space between items for air circulation so they can be cooled effectively.
- To prevent cross-contamination, flavor transfer, and moisture loss, food should be separately packed or covered and placed on separate shelves. Fruit and vegetables do not need to be wrapped.
- To prevent cold air from escaping,try to limit the number of times you open the doors. Sort foods to be kept in your refrigerator or freezer before opening the door. Only open the door to put food in or take it out.
- Do not keep food past the manufacturer's recommended expiration or best by date.

REFRIGERATING FOOD

When placing food in your refrigerator:

- Keep raw meats on a plate that is large enough to collect juices and cover it with cling film or foil.
- Store cooked meats on a shelf above raw meats to avoid bacterial transfer.

FREEZING FOOD

When placing food in your freezer:

- Make sure that you select the correct storage containers or bags:
    - Do not use glass, thin cling film, or used food containers.
    - Use special freezer bags, freezer film, plastic bags, plastic containers, or aluminum foil to store acidic foods(such as citrus fruits).
    - Consider how you want to cook your food before freezing it. Don't freeze food in metal containers if you want to microwave it straight from the freezer.
- Remove as much air from the container or bag as possible. If you're freezing liquids, leave a small amount of air space to allow for expansion.

ⓘ If you want, you can buy a vacuum pump that sucks extra air out of packaging.

- Chill food in your refrigerator before freezing, if possible.

- Do not place unfrozen food in direct contact with food that is already stored and frozen. Do not add too many unfrozen items at once.
- You can use the space in the freezer most efficiently if you freeze liquids (or solids with liquids, such as stew) in square blocks. Pour the liquid into a plastic bag that is placed inside a square-sided container. Freeze it, then remove the bag from the container and seal the bag.
- Do not store carbonated drinks in the freezer compartment.
- Place frozen food into the freezer as quickly as possible after purchase. If there are instructions on the packet, carefully follow these instructions regarding storage times.
- If you place too much food in the freezer at once, the freezing ability is reduced which affects the quality of your frozen food.
- If the internal temperature of frozen food rises during maintenance or cleaning, it may shorten the storage life of your food.

NAVIGATING POWER OUTAGES

If you lose power or your freezer stops working:

- After the freezer has been turned off, unplugged, or lost power, wait 3–5 minutes before turning the freezer back on. If you try to turn it on before this time, the refrigerator will not start.
- Keep the door closed as much as possible. Even in the summer, food inside your freezer can be kept for several hours.
- Do not place additional food in your freezer.
- Place a water-tight container of ice in the freezer to help keep your food cold.
- If a power outage is planned, lower your freezer temperatures as much as possible an hour before the power will go out. Do not store new food during this time.

SAVING ENERGY

Follow these energy tips to help reduce your freezer's energy use:

- Install your freezer in the coolest part of the room, out of direct sunlight and away from heating ducts or registers. Do not place your freezer next to heat-producing appliances such as a range, oven, or dishwasher.
- Your freezer door should remain open only as long as necessary. Organize and label food to reduce door openings. Remove as many items as needed at one time and close the door as soon as possible.
- Do not place hot food inside your freezer Instead, cool food to room temperature before storing.

MAINTAINING YOUR FREEZER

CLEANING AND CARE

- Your freezer has a frost -free design that doesn't require manual defrosting.
- Before cleaning the interior, turn off the power and remove all food, drinks, shelves, and drawers.
    - Clean your freezer with non-corrosive neutral detergents and a soft cloth or sponge dipped in water. Open the door to air dry before the power is turned on.
    - Clean the freezer with clean water and a dry cloth. Open the door to air dry before the power is turned on.
    - Clean trays, shelves, and drawers with non corrosive neutral detergents and a soft cloth. Dry them with a soft cloth or let them air dry.
- Wipe the outside cabinet with soapy water or detergent and a soft cloth, then wipe dry.
- Check door seals regularly to make sure that they are clean and free from food particles.

- Make sure that your freezer door is properly closed to avoid increased energy consumption, and the formation of excess ice or condensation inside.
- Constantly circulating cold air keeps the temperature homogenous inside your freezer. For this reason, it is important to properly distribute the food and not block air vents to facilitate the flow of air.
- Cover food and wipe containers dry before placing them in your freezer. This cuts down on moisture buildup inside your freezer.
- Do not line the shelves with aluminum foil, wax paper, or paper towels. Liners interfere with cold air circulation, making your freezer less efficient, which could cause food spoilage.
- Clean with soapy water or diluted detergent and a soft cloth.
- Clean dust and debris behind your freezer and on the ground to improve the cooling and energy savings.
- Do not use hard brushes, steel wool, wire brushes, abrasives (such as toothpaste), organic solvents (such as alcohol, acetone, or banana oil), boiling water, acid, or alkaline items to clean your freezer. These things may damage your freezer surface a nd interior.
- Do not rinse directly with water or other liquids during cleaning to avoid short circuits or damage to electrical insulation.

REPLACING THE LIGHT

Your freezer's LED is designed for a long life and is not user replaceable. Contact a qualified service provider to replace.

MOVING YOUR FREEZER

- Before your freezer is moved:
  - Take all objects out of your freezer.
  - Secure the shelves, drawers, and doors with tape.
  - Tighten the leveling feet.
- After moving or reversing the door, wait two hours before turning on your freezer. This reduces the chance of a malfunction in the cooling system from handling and transportation.

SAFETY AND PRECAUTIONS

We have provided many important safety messages in this manual for your appliance. Always read and obey all safety messages.

⚠ WARNING	This is the Safety Alert Symbol. This symbol alerts you to potential hazards that can kill or injure you and others. All safety messages will follow the Safety Alert Symbol and either the words "DANGER," "WARNING," or "CAUTION."

⚠ DANGER	Danger means that failure to heed this safety statement may result in severe personal injury or death.
⚠ WARNING	Warning means that failure to heed this safety statement may result in extensive product damage, serious personal injury, or death.
CAUTION	Caution means that failure to heed this safety statement may result in minor or moderate personal injury, property, or equipment damage.

All safety messages will alert you to know what potential hazard is, tell you how to reduce the chance of injury, and let you know what can happen if the instructions are not followed.

PREPARING FOR LONG-TERM STORAGE

If your freezer is not going to be used for several months, turn it off, unplug it, remove all food, clean/dry it, and leave the doors open (or remove them) to prevent unpleasant smells or mold.

⚠ **WARNING**: Supervise small children to make sure that they do not climb inside the freezer.

SERVICING YOUR FREEZER

Your freezer should be serviced by a qualified technician, and only genuine spare parts should be used. Under no circumstances should you attempt to repair the freezer yourself. Repairs carried out by inexperienced persons may cause injury or serious malfunction. Contact a qualified technician.

REFRIGERANT GAS WARNINGS

CAUTION: Risk of Fire

- **DANGER**: Risk of fire or explosion. Flammable refrigerant used.
- **DO NOT** use mechanical devices to defrost the freezer . DO NOT puncture refrigerant tubing.
- **DANGER**: Risk of fire or explosion. Flammable refrigerant used. To be repaired only by trained service personnel. DO NOT puncture refrigerant tubing.
- **CAUTION**: Risk of fire or explosion. Flammable refrigerant used. Consult repair manual/owner's guide before attempting to service this product. All safety precautions must be followed.
- **CAUTION**: Risk of fire or explosion. Dispose of property in accordance with federal or local regulations. Flammable refrigerant used.

- CAUTION: Risk of fire or explosion due to puncture of refrigerant tubing. Follow handling instructions carefully. Flammable refrigerant used.
- CAUTION: This appliance is not intended for use by persons (including children) with reduced physical, sensory, or mental capabilities, or lack of experience and knowledge, unless they have been given supervision or instruction concerning use of the appliance by a person responsible for their safety. Children should be supervised to ensure that they do not play with the appliance.

IMPORTANT SAFEGUARDS

⚠ Before the freezer is usedit must be properly positioned and installed as described in this manual, so read the manual carefully. To reduce the risk of fire, electrical shock, or injury when using the freezer, follow basic precautionsincluding the following:

⚠ DANGER

- Plug into a grounded 3-prong outlet, do not remove the grounding prong, do not use an adapter, and do not use an extension cord.
- It is recommended that a separate circuit, serving only your freezer be provided.Use receptacles that cannot be turned off by a switch or pull chain.
- Never clean freezer parts with flammable fluids. These fumes can create a fire hazard or explosion. Do not store or use gasoline or other flammable vapors and liquids in the vicinity of this or any other appliance. The fumes can create a fire hazard or explosion.
- Before proceeding with cleaning and maintenance operations, make sure that the freezer's power cord is disconnected.
- Do not connect or disconnect the electric plug when your hands are wet.
- If the SUPPLY CORD is damaged, it must be replaced by the manufacturer, its service agent or similarly qualified persons in order to avoid a hazard.
- Unplug the freezer or disconnect power before cleaning or servicing. Failure to do so can result in electrical shock or death.
- Do not attempt to repair or replace any part of your freezer unless it is specifically recommended in this manual. All other servicing should be referred to a qualified technician.

⚠ WARNING

FOLLOW WARNINGS BELOW ONLY WHEN APPLICABLE TO YOUR MODEL:

- Use two or more people to move and install your freezer. Failure to do so can result in back or other injury.
- To ensure proper ventilation for your freezer. the front of the unit must be completely unobstructed. Choose a well-ventilated area with temperatures above 60°F (16°C) and below 90°F (32°C). This freezer must be installed in an area protected from the elements, such as wind, rain, water spray, or drips.
- The freezer should not be located next to ovens, grills, or other sources of high heat.
- The freezer must be installed with all electrical, water, and drain connections in accordance with state and local codes. A standard electrical supply (115 V AC only, 60 Hz), properly grounded in accordance with the National Electrical Code and local codes and ordinances is required.
- Do not kink or pinch the power supply cord of your refrigerator.
- The fuse (or circuit breaker) size should be 15 amperes.
- It is important for the freezer to be leveled in order to work properly. You may need to make several adjustments to level it.
- All installation must be in accordance with local plumbing code requirements.

- Make sure that the pipes are not pinched, kinked, or damaged during installation.
- Check for leaks after connection.
- Never allow children to operate, play with, or crawl inside the freezer.
- If you use the drainage container, you must unplug the freezer or the water can overflow from the drainage container.
- Although the unit has been tested at the factory, due to long-term transit and storage, the first batch of ice cubes must be discarded.
- Do not use solvent-based cleaning agents or abrasives on the interior. These cleaners may damage or discolor the interior.
- Do not use this freezer for anything other than its intended purpose.
- Do not use electrical appliances inside the food storage compartments of the appliance, unless they are of the type recommended by the manufacturer.

IMPORTANT SAFETY INSTRUCTIONS

⚠ WARNING

To reduce the risk of fire, electrical shock, or injury when using your refrigerator-freezer, follow these basic precautions:

- Read all instructions before using the freezer.
- DANGER or WARNING: Risk of child entrapment. Child entrapment and suffocation are not problems of the past. Junked or abandoned freezers are still dangerous, even if they will "just sit in the garage a few days."
- Before you throw away your old refrigerator: Take off the doors. Leave the shelves in place so that children may not easily climb inside.
- Never allow children to operate, play with, or crawl inside the freezer.
- Never clean freezer parts with flammable fluids. The fumes can create a fire hazard or explosion.
- Do not store or use gasoline or any other flammable vapors and liquids in the vicinity of this or any other freezer. The fumes can create a fire hazard or explosion.

TROUBLESHOOTING

If your freezer has problems, check this table before making a service call.

PROBLEM	SOLUTION
Not turning on	• Make sure that your freezer is securely connected to a working power outlet. • Check if the power is out or a circuit breaker has tripped. • Make sure that the power outlet uses the correct voltage (115 V).
Bad odor	• Make sure that food are tightly wrapped. • Make sure that there is no rotten food in your freezer . • Clean the insid e of your fre ezer.
Compressor runs for a long time or turns on and off frequently	• The compressor running for a long time is normal in the summer when the ambient temperature is high. • Make sure that your freezer is not overloaded with too much food. Keep items separated to promote better air circulation. • Make sure that your freezer has the correct clearances for air circulation. See "Positioning your freezer" on page 7 for more information. • Cool foods to room temperature before placing them inside your freezer . • The door are opened too frequently. Keep the door closed. • Adjust your freezer or freezer compartment's temperature. • Clean the door seals and check them for damage.
Light is not working	• Make sure that your freezer is turned on and running. • If the light is burned out or damaged, have it replaced by a qualified service provider.
Doors are not properly closing	• Move items that are preventing the door from closing. • Make sure that your freezer is on a hard, flat surface and adjust the leveling feet. • Clean the door seals and check them for damage.
Loud noise	• Make sure that the floor and freezer are level and stable. • Make sure that accessories are placed in their proper locations.

PROBLEM	SOLUTION
Door seal is not tight	• Clean the door seals. • Heat the door seal (blow it with a hair dryer or use a hot towel) and then cool it to restore the seal.
Water pan overflows	• There is too much food in the chamber or food stored contains too much water, causing heavy defrosting. Remove excess food. • The doors are not closed properly, causing increased water from defrosting. Move items blocking the door or check the door seal.
Hot housing	• It is normal to have heat from the built-in condenser dissipate through the housing. If the housing becomes too hot due to high ambient temperature, storage of too much food, or compressor shutdown, make sure that you have good ventilation to help with heat dissipation.
Surface condensation	• Condensation on the outside of your freezer and door seals is normal when the ambient humidity is too high. Just wipe the condensate with a clean towel.
Abnormal noise	• The compressor may produce buzzes during operation, and the buzzes are loud particularly upon start or stop. This is normal. • Refrigerant flowing inside of the appliance may creak, which is normal. • Make sure that your freezer is level.