Criterion®

User's Manual

25.6 cu.ft. Refrigerator

Models: CFDR256H1S(453-8127)

BEFORE USING YOUR PRODUCT:

Please read this manual carefully and follow all safety rules & operating instructions. Keep this manual for future reference.

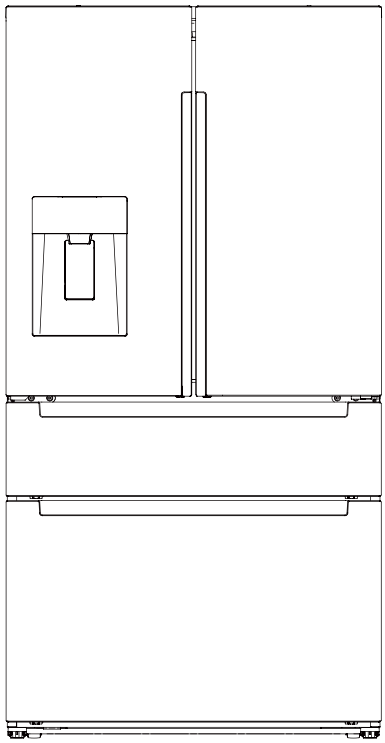

OPERATION MANUAL

Service Support

888-411-7118

105 Satellite Blvd NW, Suwanee, GA 30024

Criterion@hisense.com

Contents

Thank you for choosing Criterion. We are sure you will find your new refrigerator a pleasure to use. However, before you use the appliance, we recommend that you carefully read the instructions, which provide details about installing and using the product. Please keep this manual for future reference.

Safety and warning information 3
Installing your new appliance..... 6
Description of the appliance..... 13
Display controls..... 14
Using your appliance..... 17
Cleaning and care..... 23
Helpful hints and tips..... 25
Troubleshooting..... 26
Disposal of the appliance..... 30

⚠ IMPORTANT ⚠

1. Please read Owner's Manual.
2. Stand refrigerator upright for 4 hours and level appliance prior to plugging in.
3. DO NOT RETURN TO STORE before calling Customer Service with questions or problems.

For questions or assistance, please contact Customer Service at: 1-888-411-7118 between 9:00 am and 6:00 pm EST or ernail: Criterion@hisense.com

Safety and warning information

General safety

- This appliance is intended to be used in household and similar applications such as
  1.staff kitchen areas in shops, offices and other working environments;
  2.farm houses and by clients in hotels, motels and other residential type environments;
  3.bed and breakfast type environments;
  4.catering and similar non-retail applications.
- Do not store explosive substances such as aerosol cans with a flammable propellant in this appliance.
- If the supply cord is damaged, it must be replaced by the manufacturer, its service agent or similarly qualified persons in order to avoid a hazard.
- Keep ventilation openings, in the appliance enclosure or in the built-in structure, clear of obstruction.
- Do not use mechanical devices or other means to accelerate the defrosting process, other than those recommended by the manufacturer.
- Do not damage the refrigerant circuit.
- Do not use electrical appliances inside the food storage compartments of the appliance, unless they are of the type recommended by the manufacturer.
- The refrigerant and insulation blowing gas are flammable. When disposing of the appliance, do so only at an authorized waste disposal centre. Do not expose to flame.
- When positioning the appliance, ensure the supply cord is not trapped or damaged.
- Do not locate multiple portable socket-outlets or portable power supplies at the rear of the appliance.

Replacing the illuminating lamps

- The illumination lamps must not be replaced by the user! If the illumination lamps is damaged, contact the customer helpline for assistance. This warning is only for refrigerators that contain illumination lamps.

Refrigerant

- The refrigerant isobutane (R600a) is contained within the refrigerant circuit of the appliance. During transportation and installation of the appliance, ensure that none of the components of the refrigerant circuit become damaged. The refrigerant (R600a) is flammable.
- Refrigerators contain refrigerant and gases in the insulation. Refrigerant and gases must be disposed of professionally as they may cause eye injuries or ignition. Ensure that tubing of the refrigerant circuit is not damage prior to proper disposal.
- Risk of fire / flammable materials If the refrigerant circuit should be damaged:
  1.Avoid opening flames and sources of ignition.
  2.Thoroughly ventilate the room in which the appliance is situated.
- It is dangerous to alter the specifications or modify this product in any way. Any damage to the cord may cause a short circuit, fire, and/or electric shock.

Electrical safety

- The power cord must not be lengthened.
- Make sure that the power plug is not crushed or damaged. A crushed or damaged power plug may overheat and cause a fire.
- Make sure that you can access the main plug of the appliance.
- Do not pull the main cable.
- If the power plug socket is loose, do not insert the power plug. There is a risk of electric shock or fire.
- You must not operate the appliance without the interior lighting lamp cover.
- The fridge is only applied with power supply of single phase alternating current of 110~115V/60Hz. If fluctuation of voltage in the district of user is so large that the voltage exceeds the above scope, for safety sake, be sure to apply A.C. Automatic voltage regulator of more than 350W to the fridge. The fridge must employ a special power socket instead of common one with other electric appliances. Its plug must match the socket with ground wire.

Daily use

- Do not store flammable gases or liquids in the appliance,There is a risk of an explosion.
- Do not operate any electrical appliances in the appliance (e.g. electric ice cream makers, mixers etc.).
- When unplugging always pull the plug from the mains socket, do not pull on the cable.
- Do not place hot items near the plastic components of this appliance.
- This refrigerating appliance is not intended to be used as a built-in appliance.
- Do not place food products directly against the air outlet on the rear wall.
- Store pre-packed frozen food in accordance with the frozen food manufacturers' instructions.
- The appliances manufacturers' storage recommendations should be strictly adhered to. Refer to relevant instructions for storage.
- Do not place carbonated or fizzy drinks in the freezer compartment as it creates pressure on the container, which may cause it to explode, resulting in damage to the appliance.
- In order to sense the temperature and humidity near the appliance and make the appliance run better, add temperature and humidity sensor outside the box of appliance.
- Frozen food can cause frost burns if consumed straight from the freezer compartment.
- Do not place the appliance in direct sunlight. Keep burning candles, lamps and other items with naked flames away from the appliance so that do not set the appliance on fire.
- The appliance is intended for keeping food stuff and/or beverages in normal household as explained in this instruction booklet. The appliance is heavy. Care should betaken when moving it.

- Do not remove nor touch items from the freezer compartment if your hands are damp/wet,as this could cause skin abrasions or frost/freezer burns.
- Never use the base, drawers, doors etc. to stand on or as supports.
- Frozen food must not be refrozen once it has been thawed out.
- Do not consume ice popsicles or ice cubes straight from the freezer as this can cause freezer burn to the mouth and lips.
- To avoid items falling and causing injury or damage to the appliance, do not overload the door racks or put too much food in the crisper drawers.

Caution! Care and cleaning

- Before maintenance, switch off the appliance and disconnect the mains plug from the mains socket.
- Do not clean the appliance with metal objects, steam cleaner, ethereal oils, organic solvents or abrasive cleansers.
- Do not use sharp objects to remove frost from the appliance. Use a plastic scraper.

Installation Important

- For electrical connection carefully, follow the instructions given in this manual. Unpack the appliance and check if there are damages on it.
- Do not connect the appliance if it is damaged. Report possible damages immediately to the place you bought it. In this case retain packing.
- It is advisable to wait at least four hours before connecting the appliance to allow the oil to flow back in the compressor.
- Adequate air circulation should be around the appliance, lacking this leads to overheating. To achieve sufficient ventilation, follow the instructions relevant to installation.
- Wherever possible the back of the product should not be too close to a wall to avoid touching or catching warm parts (compressor, condenser) to prevent the risk of fire, follow the instructions relevant to installation.
- The appliance must not be locate close to radiators or cookers.
- Make sure that the mains plug is accessible after the installation of the appliance.

Service

- Any electrical work required to do the servicing of the appliance should be carried out by qualified electrician or competent person.
- This product must be serviced by an authorized Service Center, and only genuine spare parts must be used:

  1. If the appliance is Frost Free.
  2. If the appliance contains freezer compartment.

Installing your new appliance

Before using the appliance for the first time, you should be aware of the following tips.

Warning

For proper installation, this refrigerator must be placed on a level surface of hard material that is the same height as the rest of the flooring. This surface should be strong enough to support a fully loaded refrigerator.

The rollers, which are not casters, should be only used for forward or backward movement. Moving the refrigerator sideways may damage your floor and the rollers.

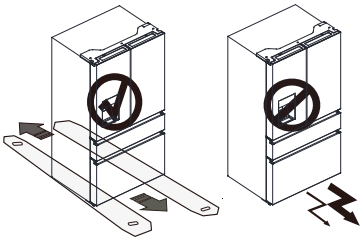

Ventilation of appliance

In order to improve efficiency of the cooling system and save energy, it is necessary to maintain good ventilation around the appliance for the dissipation of heat. For this reason, sufficient clear space should be available around the refrigerator.

- **Suggestion**

  It is advisable for there to be at least 2"(50mm) of clearance from the back of the fridge to the wall, at least 1/2"(12mm) of clearance from its top, at least 1/2"(12mm) from its side to the wall and a clear space in front to allow the doors to open 125°, as shown in the following diagram.

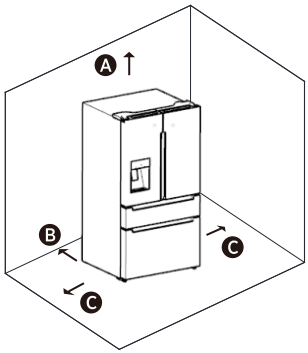

Ⓐ 1/2" Above

Ⓑ 2" Behind

Ⓒ 1/2" Each Side

Note

- This appliance performs well with ambient temperature between 55°F (12.8° C) to 110°F (43.3° C). The appliance may not work properly if left at a temperature above or below the indicated range.
- Stand your appliance in a dry place to avoid high moisture.
- Keep the appliance out of direct sunlight. rain or frost. Stand the appliance away from heat sources such as stoves, fires or heaters.

Adjusting Door Height And Door Gap

The height of a door can be adjusted using the provided Snap Rings. Tools you will need:

Small Snap Ring (2pcs)	Big Snap Ring (2pcs)	Wrench (Not provided)

To Adjust The Height Of Door

1.Check the height difference between the doors and then lift and hold the lowest door to be even with the other.

2.Insert a suitably sized Snap Ring between the Door and the Hinge as shown.

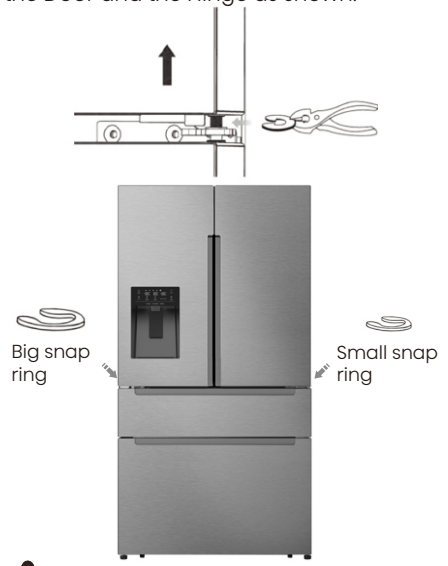

Important

1.Insert only one Snap Ring. If you insert two or more Snap Rings, they may slip out or cause a rubbing noise.
2.Do not raise the door too much.
The door may contact and damage the top cover.
3.Save remaining Snap Rings for possible future use.

Warning

Contains Small Parts, Keep the Snap Rings Away From Babies and Children

Leveling of appliance

- For sufficient leveling and air circulating in the lower rear section of the appliance, the bottom feet may need to be adjusted. You can adjust them manually by hand or by using a suitable tool.
- To allow the doors to self-close, tilt the top backwards by 0.4" - 0.6"(10 -15mm).

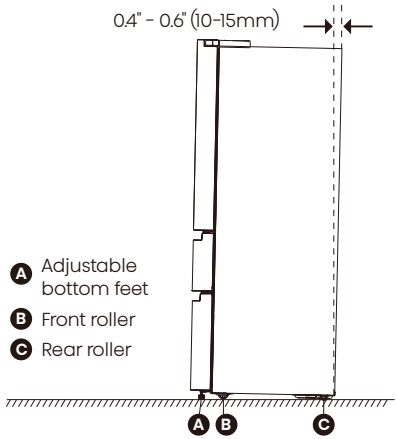

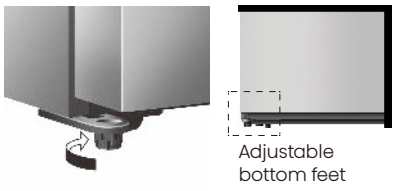

Door Removal

In case your home access door is too narrow for the refrigerator to pass through, remove the refrigerator doors and drawers. If you do not need to remove the appliance doors, proceed to "**Installing Water Lines**" on page 10. If you need to remove the doors, continue below.

Tools you will need(Not provided)

Allen Wrench (5/32", 4mm)	Wrench (5/16", 8mm)
Philips Screwdriver	

Warning

Electrical Shock Hazard Disconnect power before removing doors. Reconnect ground wire before operating. Failure to do so could result in death or electric shock.

Keep the refrigerator doors closed until you are ready to lift them from the cabinet.

1.Unplug refrigerator or disconnect power.
2.Using a Phillips screwdriver, remove the three screws(A) attaching the hinge cover, and then remove the hinge cover with the entire harnesses attached.

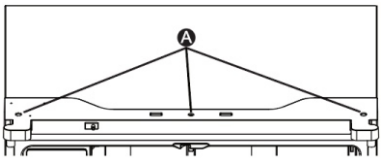

3. Separate the two connectors on the left side door. To remove the wire connector, press the top of the connector (B) and separate it from the other one. To remove the water coupler from the hinge, twist and pull the clips from the coupler. Remove the water line (C) while pressing the movable part (D) of the water line coupler.

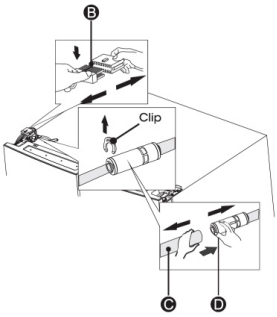

4. Remove the 3 screws (E) fixed on the hinges, with a Wrench (8mm) and 1 ground screws (F) attached to the hinge with Philips (+) screwdriver. Remove the upper left door hinge (G).

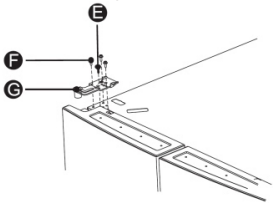

5. Use our both hands to open the door more than 90°. Lift it up and take it off.

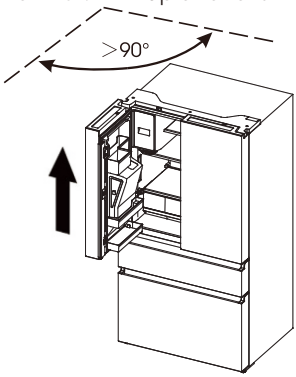

6. If necessary, remove the 2 hex head bolts hinges (I) with an Allen wrench (5mm). Remove the lower left door hinge (H).

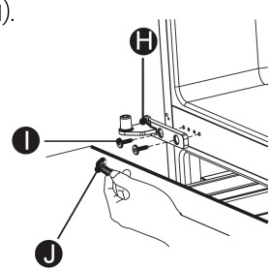

7 . Pull the middle door fully open.

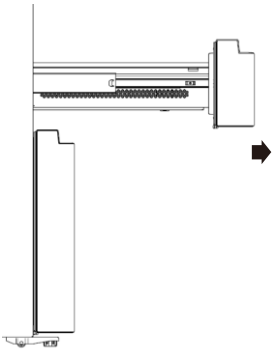

8 . Take out upper drawer.

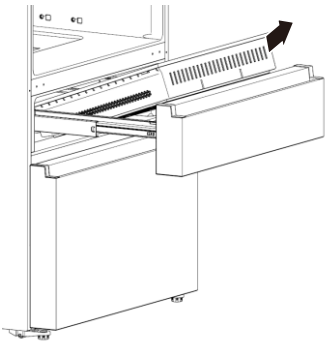

9.Remove the two screws that secure the support frame.

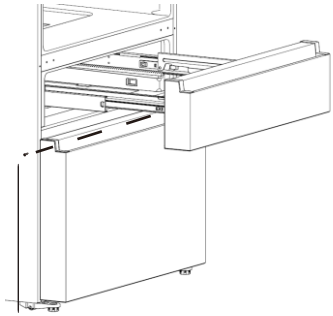

Screws

10 . Take out the middle door.

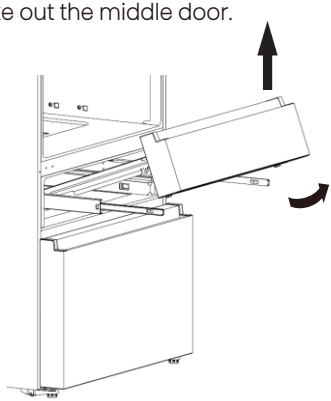

11 . Pull the freezer door and the freezer drawer fully open.

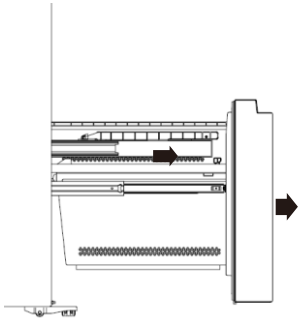

12 . Take out the middle drawer.

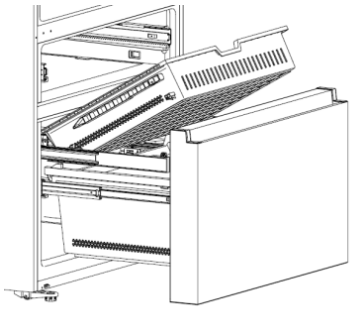

13 . Take out the lower drawer.

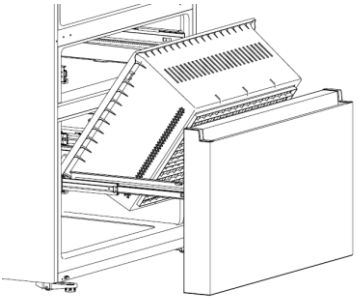

14 . Take out the freezer door.

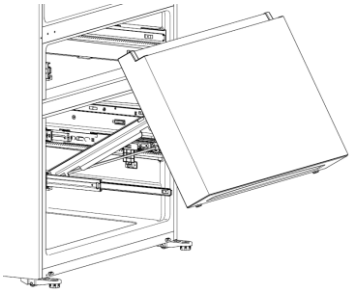

15 . Move your refrigerator into its final position, then re-install the drawers and doors by reversing these steps.

Warning

In order to ensure the self-close mechanism works correctly, please make sure the doors are opened more than 90 degrees when you remove or reattaching them.

Installing the water lines

- Ice & water dispenser with a filter is one of the helpful features on your new appliance. To help promote better health, the water filter removes unwanted particles from your water.
- Please follow the below instructions carefully for correct installation.
- In order for the ice & water dispenser to operate properly, a water line is required.

  -the maximum inlet water pressure is 700kPa;

  -the minimum inlet water pressure is 207kPa.

Warning

- The water connection must be made by a qualified plumber. Operation outside the water pressure range may cause malfunction, or severe and damaging water leaks.
- Under normal conditions, a200cc (5.75 oz.) cup can be filled in about 10 seconds.
- If the refrigerator is installed in an area with low water pressure (below 30psi), you can install a booster pump to compensate for the low pressure.

What you need to have before you begin

- 1. Power drill and 1/4" drill bit.
- 2. 1/2" or adjustable wrench.
- 3.lat blade and Philips head screwdrivers.



Saddle-type Shut Off valve (1/4" outlet)



one 1/4" compression



1 ferrule (sleeve)



1/4" extension tubing



1 Coupler



2 Clips

- 4. You may need to purchase No.1, No.2, and No.3 parts to complete connection. You may find these items sold as a kit at a local hardware store.

Connecting to the water supply line

1. First, shut off the main water supply.



2.Using a power drill and a 1/4" drill bit drill into the cold-water line and connect the saddle-type shutoff valve.

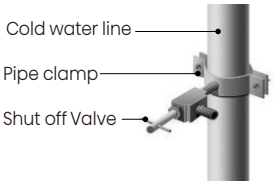

3.Connect 1/4" extension tubing to shut off valve outlet.

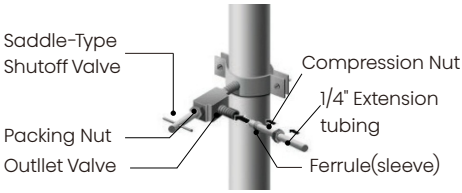

4. Flush the tubing. Turn the main water supply on and flush out the tubing until the water is clear. Then, shut the water off at the water valve after about a quart of water has flushed through the tubing.



5. Connect the extension tubing line with the line on the back of the fridge via the coupler. Fully insert the extension tubing into the coupler, and then insert the clip onto the coupler to lock in the tubing. Do the same with the other end. After both clips are inserted, check the line to make sure it is held firmly by the clips.

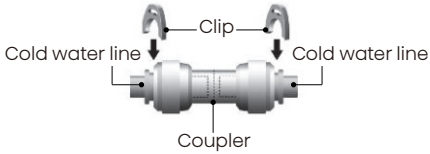

Note

- Ensure that the water line does not get pinched or bent when installing.
- This can result in improper water flow through the line and will affect the functionality of the fridge.

6. Turn the water on and check for leakage.



Connect Water Line to Refrigerator

Important

If you turn the refrigerator on before the water is connected, turn off the ice maker.

1. You may need to purchase below items to complete this connection. And you may find these items sold as a kit at a local hardware store.

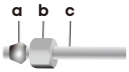

a Ferrule (Sleeve) -1 pcs
b 1/4" Compression Nut - 1 pcs
c 1/4" Water Line -1 pcs

2. Unplug refrigerator or disconnect power.

3. Close shutoff value.

4. Thread a 1/4 " compression nut and ferrule (sleeve) onto the free end and of 1/4" water line.

5. Insert the free and of the 1/4" water line into the brass fitting attached to the water inlet on the back of the refrigerator.

6. Slide the 1/4" compression nut over the ferrule (sleeve) and screw the 1/4" compression nut onto the brass fitting.

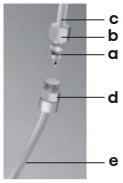

c 1/4" Water Line
b 1/4" Compression Nut
a Ferrule (Sleeve)
d Brass Fitting
e Water Inlet

7. Comfirm 1/4" water line is secure by gently pulling on it.

8. Turn on water supply and check for leaks. Correct any leaks

Note

- Use only the new tubing supplied with the refrigerator. Old tubing should not be used. After connected to the water supply line, please open the water valve to flush the filter for 5 minutes before use.
- The initial dark discoloration of water is normal.

Warning

- The water line must be connected to the cold water pipe. If it is connected to the hot water pipe, it may cause the purifier to malfunction.
- Avoid contamination of pipes during installation.
- Connect to potable water supply only.

Description of the appliance

View of the appliance



01.Refrigerator LED Light
02.Water Filter
03.Refrigerator Door Bin
04.Ice-Maker
05.Mullion
06.Glass Shelf
07.Refrigerator Side Light
08.Storage Drawer
09.Middle Storage Drawer
10.TempControl Drawer
11.Freezer Upper Drawer
12.Freezer Lower Drawer
13.Fridge Door Left
14.Fridge Door Right
15.TempControl Door
16.Freezer Door
17.Leveling Leg

Note: Due to constant development of our products, your refrigerator may be slightly different from this instruction manual, but its functions and usage remain the same.

Note: To get the best energy efficiency of this product, please place all shelves, drawers on their original position as the illustration above.

Display controls

Your product has one control panel which is installed on the refrigerator door. Use your appliance according to the following control guidelines.

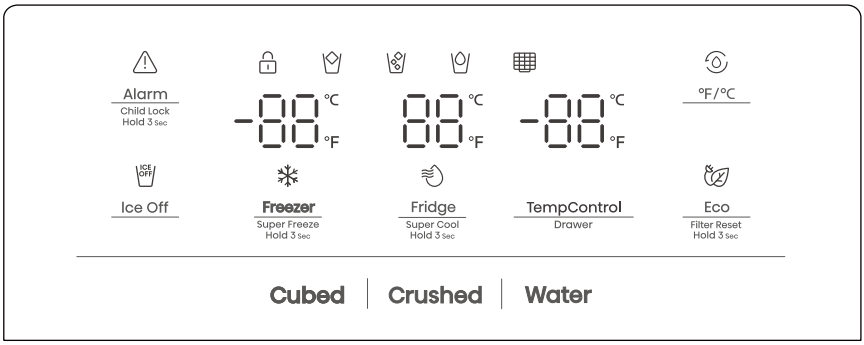

The display will illuminate when the refrigerator is first plugged in. However the lights will automatically turn off after 60 seconds.

"Child Lock and Door Alarm"

This button serves two purposes:

1. Child Lock

Press and hold "Alarm" for 3 seconds to lock the whole Control Panel including dispenser function. If Control panel is locked, the icon " " will be on, and none of the buttons on the Control panel work. To unlock the Control panel, please press and hold "Alarm" for 3 seconds again.

2. Door Alarm

Leaving any door open for over 2 minutes will activate door alarm. The icon " " will flicker, the control panel will display " dr", and you will hear a buzzer sound. The buzzer will sound 3 times per minute and will stop after 8 minutes. In case of alarm, you can touch the Alarm button to cancel door alarm, then the icon " " stops flickering and keeps on, the buzzer sound will stop at the same time. Also door alarm can be stopped by closing all the doors. To save energy, please avoid keeping doors open for a long time when using refrigerator.

"Ice Control"

You can touch "Ice Off" button to control the ice maker. When the Child Lock is off, you can touch the "Ice Off" icon to lock the ice maker, and the icon " " will be illuminated. If you want to unlock the ice maker, please touch the "Ice Off" button again, and the icon " " will be off.

Note:

When the "Ice Off" is on, it only locks the ice maker not the dispenser.

“Fridge Temperature Control”

When you touch the button continuously, the temperature will be set in the following sequence.

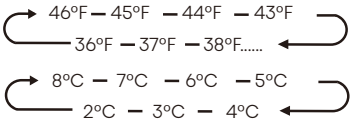

If you want to decrease the time needed to cool items in the Fridge, please touch and hold this button for 3 seconds, the Super Cool icon " " will be illuminated, the fridge temperature setting will display 36°F(2°C). Super Cool automatically switches off after 3 hours, and the refrigerator temperature setting will revert back to the previous setting. When Super Cool function is on, you can touch the "Fridge" to switch it off.

Note:

On the Super Cool Function, when you touch the "Eco" button, Eco function will be activated, and "Super Cool" mode will be off.

“Freezer Temperature Control”

You can touch the "Freezer" button to activate the mode to control the freezer temperature. When you press the button continuously, the temperature will be set in the following sequence.

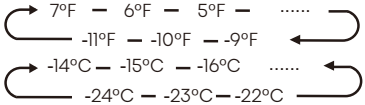

Press and hold the button for 3 seconds, the icon " " will be illuminated, the freezer temperature setting will display -11°F(-24°C). Super Freeze can quickly lower the temperature and freeze your food faster than usual. This can retain more of the vitamins and nutrition in fresh food and keep your food longer. Super Freeze automatically switches off after 52 hours, and the freezer temperature setting will revert back to the previous setting. When the Super Freeze function is on, you can touch "Freezer" to switch off the Super Freeze function. The Super Freeze is used to perform pre-freezing and fast freezing in sequence of Freezer compartment. This function accelerates the freezing of fresh food and, at the same time, protects foodstuffs already stored from undesirable warming.

Note

- To freeze fresh food activate the Super Freeze function at least 24 hours before placing the food to complete pre-freezing.
- On the Super Freezer Function, when you touch the "Eco" button, Eco function will be activated, and "Super Freezer" mode will be off.

“TempControl”

You can touch the "TempControl" button to activate the mode to control the convertible compartment temperature. When you press the button continuously, the temperature will be set in the following sequence.

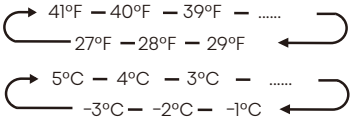

“Dispenser Control”

When the Child Lock is on, the dispenser will not work. When the Child Lock is off, you can press the "Cubed" or "Crushed" option to choose the type of ice to be dispensed, and press the "Water" button will activate the water mode. If you choose the function of Cubed, the " " icon will be illuminated, choose the fuction of Crushed the " " icon will be illuminated, and the " " icon will be illuminated when Water function is chosen.

“ °F/°C ”

When the Child Lock is off, you can touch the"°F/°C" button to switch between Celsius and Fahrenheit units. The default state is Fahrenheit display. When it is switched to Fahrenheit, the icon " " will be on.

“ECO/Energy Saving”

You can touch this button to turn Energy Save mode on and off. When you turn Energy Save on, the Eco icon " " lights. The temperature of the fridge is automatically switched to 43°F(6°C) and the freezer to 1°F(-17°C). If Energy Save is off, the icon " " will go off and the temperature setting will revert back to the previous setting.

“Water Filter”

In general, you should change the water filter every 6 months to ensure the highest possible water quality. After the refrigerator has dispensed about 200 gallons of water, the filter icon " " will blink, reminding you to replace the water filter.
You can purchase the new filter from the retailer where you purchased your refrigerator or the MORA after-sales service system. Make sure that the new filter is the same filter type that came with your fridge and can be correctly used in your refrigerator. After you change the water filter, touch and hold the "Eco" buttons for 3 seconds to make the blinking stop.

“Demo Mode”

Demo mode is for store display, and it prevents the refrigerator from generating cool air. In this Demo Mode, the refrigerator may seem like it is working but it will not make cool air. The indicators on the control panel will show "0F". To cancel this mode, touch and hold "Alarm" and "°F/°C" buttons at the same time for 3 seconds until the buzzer beep a long sound.

Using your fridge compartment

- The refrigerator compartment is suitable for storage of vegetables and fruit. Food inside should be sealed for storage in order to avoid losing moisture or flavor permeating into other foods.

Caution!
Never close the refrigerator door while the shelves, crisper and/or telescopic slides are extended. It may damage both them and the refrigerator.

Opening and Closing Doors

- The four doors can be opened and closed either separately or together.
- There is a mullion on the left-hand side refrigerator compartment door.
- When closing the left-hand door ,the mullion folds behind the right-hand door joining the two doors.
  The temperature of the door frame is controlled to help prevent moisture from developing on the mullion. The temperature of the surface may be warm, which is normal, and will not affect the performance of the refrigerator.

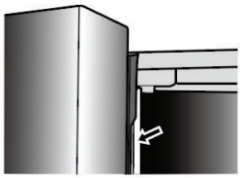

Note

Before closing the left-hand door, make sure the mullion is folded inward. If the mullion is pulled outward it may become damaged when you try to close the door.

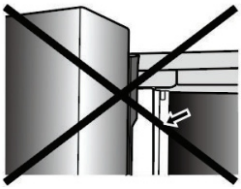

Door Bins

- The refrigerator compartment is provided with six door bins, which are suitable for the storage of canned liquid, bottled drinks and packaged food. To remove the door, simply lift the racks up and pull straight out. To relocate the door , slide it in above the desired location and push down until it stops.

Warning

Do not place too many heavy things in the baskets. Before you tilt up the door shelf vertically, please take the dood out.

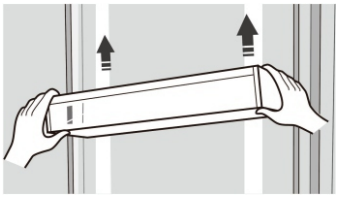

Adjustable Shelves

The height of the shelves can be adjusted to fit your storage needs.

- 1. To remove the glass shelves. Tilt up the front of the shelf in the direction shown (1) and lift it up vertically (2). Pull the shelf out.



- 2. To re-install the glass shelves, tilt the front of the shelf up and guide the shelf hooks into the slots at a desired height(1).Then lower the front of the shelf so that the hooks can drop into the slots (2).

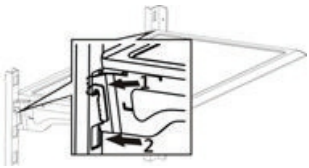

Removing/Replacing freezer drawer

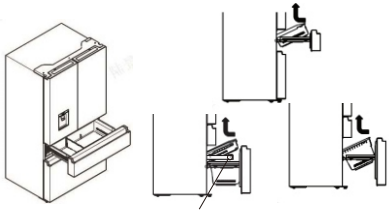

Note

Unscrew the drawer before taking it out.
1. Pull out drawer to maximum extension.
2. Lift up to remove the drawer.
3. Reverse steps 1 and 2 to replace the drawer.

Getting Cold Water and Ice

Push the appropriate ice or water type button to select what you want to dispense.

Getting Cold Water

The water dispenser is located in the fridge door. To get water, push the water button. Then move your glass down to the dispenser lever (A) at below suggested position and press it.

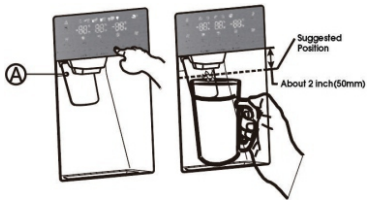

Getting Cubed & Crushed Ice

To get ice, push the cubed or crushed ice button as required. Then move your glass down to the dispenser lever(A) at below suggested position and press it.

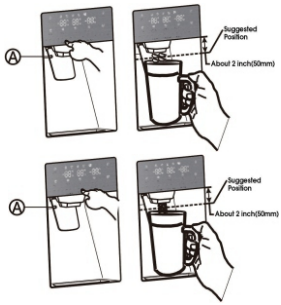

Warning

- If a power failure occurs, ice cubes may melt and then freeze together when the power comes back on, causing the dispenser to stop working. To prevent this problem, after a power failure, pull out the ice bucket and residual ice or water.
- Don't push the water dispenser lever forward without a cup below since it may cause water spilling.

Ice Maker in Refrigerator

- Press "Ice Off" Button to turn the ice maker On and Off. The Ice Off icon " " is off when the ice maker is functioning.
- Following installation, allow 24 hours to produce the first batch of ice. Discard the first three batches of ice produced. Allow 2 to 3 days to fill the ice storage container.
- If the ice in the ice container clumps or sticks to the wall, break up ice using a plastic utensil and discard. Do not use a sharp tool to break up the ice. This can cause damage to the ice container.
- Do not store any items other than ice in the ice storage container.

To turn off the Ice Maker

- Press the "Ice Off" button to turn off the ice maker, the " " icon will light up. And you need to remove all ice cubes from the ice bucket. If not, the ice cubes may clump together, making it difficult to remove them.

To remove the ice bucket

When you select the ice off mode, remove all ice cubes from the bucket.

1. Open the door at the maximum Angle.



2. Gently lift the ice bucket up, and then pull it out slowly while holding the bottom of the bucket with one hand and the side with the other hand.



3. Empty the ice bucket.

Note:

If you leave the ice cubes in the bucket, the ice cubes may clump together making it difficult to remove them.

4. When done, put the ice bucket back into the position, push it firmly straight back. If the ice bucket does not fit in, turn the helix 90 degree(see the below illustration on the right) and try again.

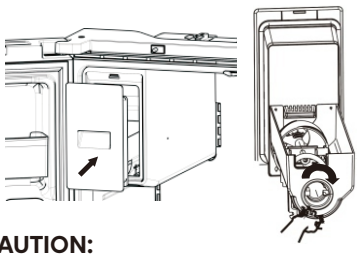

CAUTION:

- Do not apply excessive force to the bucket cover. The cover may break. To prevent injury, make sure to clean up any ice or water that has fallen on the floor.
- The inside of the ice bucket is very cold when the refrigerator is operating. Don't reach deep inside the ice bucket. This may cause physical injury or product damage.

Changing the water filter

Please refer to the owner's manual for proper maintenance and operation. If this device is not maintained and operated as specified in the owner's manual, there is arisk of exposure to contaminants.

To drink the freshest and cleanest water from your refrigerator, change the filter on time.

To change the water filter, follow below steps:

1. Shut off the water supply. Then pull the handle under the cover outwards to open the cover.

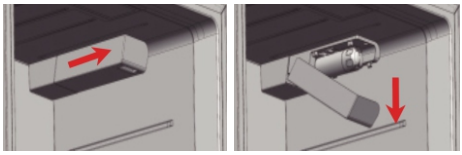

2. Pull the water filter down wards and turn it about 90° counter-clockwise to take it out. When the filter is disassembled, pay attention to keep the filter head upward tilted to avoid water leaking from the front filter part And the dropped water in the cover should be cleaned immediately.

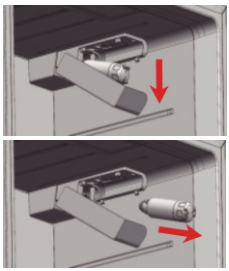

3. Insert the new water filter into the hole, and at the same time turn it about 90°clockwise until it stops.

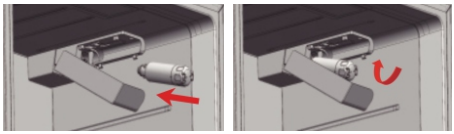

4. Push the water filter up, and move the cover up to horizontal and push it until it locks.



5. Turn the water supply back on.



Note

Turn the water supply back on. After that, you should check the leaks. If leaks occur, repeat the above operation steps 1-5. If leaks persisit, please stop using it and call your supporting dealers.

6.Flush filter for 5 minutes before use.

Removing any residual matter inside the water supply line

1. Turn on the main water supply and supply water from water supply line.
2. Let the water flow through the dispenser until it becomes clear (flush for approximately 5 minutes). This will clean the water supply system and remove the air from the lines.
3. Additional flushing may be required in some households.
4. Open the refrigerator door and make sure there are no water leaks coming from the water filler.

Note

- Be sure to flush the dispenser thoroughly, otherwise water may drip from the dispenser.
- This means that there is still air in the line. Do not dispense continuously.
- Depress and release the dispenser pad for cycles of 30 seconds ON and 60 seconds OFF.

Reverse osmosis water supply is important

- The pressure of the water supply coming out of a reverse osmosis system going to the water inlet valve of the refrigerator needs to be a minimum of 40 to 60 psi (276 to 414 kpa). If the water pressure to the reverse osmosis system.

  1. Check to see whether the sediment filter in the reverse osmosis system is blocked. Replace the filter if necessary.
  2. Allow the storage tank on the reverse osmosis system to refill after heavy usage.
  3. If your refrigerator has a water filter, it may further reduce the water pressure when used in conjunction with a reverse osmosis system. Remove the water filter. Check to see whether the sediment filter.

Cleaning and care

- For hygienic reasons the appliance (including exterior and interior accessories) should be cleaned regularly (at least every two months).

Warning

- The appliance must not be connected to the mains during cleaning. Danger of electrical
- Shock! Before cleaning switch the appliance off and remove the plug from the mains socket.

Exterior cleaning

To maintain good appearance of your appliance, you should clean it regularly.

- Wipe the digital panel and display panel with a clean, soft cloth.
- Spray water onto the cleaning cloth instead of spraying directly on the surface of the appliance. This helps ensure an even distribution of moisture to the surface.
- Clean the doors, handles and cabinet surfaces with a mild detergent and then wiped dry with a soft cloth.

Warning

- Do not use sharp objects as they are likely to scratch the surface.
- Do not use Thinner, Car detergent Clorox, ethereal oil, abrasive cleansers or organic solvent such as Benzene for cleaning. They may damage the surface of the appliance and may cause fire.

Interior cleaning

- You should clean the appliance interior regularly. It will be easier to clean when food stocks are low. You can remove the drawers and shelves for a more thorough clean.
- Wipe the inside of the freezer with a weak solution of bicarbonate of soda, and then rinse with warm water using a wrung-out sponge or cloth. Wipe completely dry before replacing the shelves and baskets.
- Thoroughly dry all surfaces and removable parts before putting them back into place.



- Although this appliance automatically defrosts, a layer of frost may occur on the freezer compartment's interior walls if the freezer door is opened frequently or kept open too long.
- If the frost is too thick, choose a time when the freezer is nearly empty and proceed as follow:
  1. Remove existing food and accessories baskets, unplug the appliance from the mains power and leave the doors open. Ventilate the room thoroughly to accelerate the process.
  2. When defrosting is completed, clean your freezer as described above.

Warning

- Do not use sharp objects to remove frost from the freezer compartment.
- Only after the interior is completely dry should the appliance be switched back on and plugged back into the mains socket.

Door seals cleaning

- Take care to keep door seals clean. Sticky food and drinks can cause seals to stick to the cabinet and tear when you open the door. Wash the seals with a mild detergent and warm water. Rinse and dry them thoroughly after cleaning.



Replacing the LED light

- To replace the LED light, the below steps can be followed:
  1. Unplug your appliance .
  2. Hold a thin blade, insert it into the gap at either end of the lampshade, and tilt one end of the lampshade.
  3. Move the blade insertion position to the other end and tilt the lampshade section by section until the lampshade falls off.
  4. Press the elastic snap of the light box with a thin-blade screwdriver, and pull one end of the elastic snap of the LED light until the LED light is detached and then pull out the connecting terminal of the LED light.
  5. Replace the LED light, install it and lampshade correctly in place.

Warning

- The LED light should be replaced by a professional. If the LED light is
- damaged, contact the customer helpline for assistance.

Helpful hints and tips

Energy saving tips

We recommend that you follow the tips to save energy.

- Try to avoid keeping the door open for long periods in order to conserve energy.
- Ensure the appliance is away from any sources of heat (Direct sunlight, electric oven or cooker etc.)
- Don't set the temperature colder than necessary.
- Don't store warm food or evaporating liquid in the appliance.
- Place the appliance in a well ventilated, humidity free room. Please refer to the installing your new appliance chapter.
- The description of appliance diagram shows the correct combination for the drawers, crisper and shelves, do not adjust the combination as this is designed to be the most energy efficient configuration.

Hints for fresh food refrigeration

- Do not place hot food directly into the refrigerator or freezer, the internal temperature will increase resulting in the compressor having to work harder and will consume more energy.
- Do cover or wrap the food, particularly if it has a strong flavor.
- Place food properly so that air can circulate freely around it.

Hints for refrigeration

- Meat (All Types) Wrap in polythene food: wrap and place on the glass shelf above the vegetable drawer. Always follow food storage times and use by dates suggested by manufacturers.
- Cooked food, cold dishes, etc: They should be covered and may be placed on any shelf.
- Fruit and vegetables: They should be stored in the special drawer provided.
- Butter and cheese: Should be wrapped in airtight foil or plastic film wrap.
- Milk bottles: Should have a lid and be stored in the door racks.

Hints for freezing

- When first starting-up or after a period out of use, let the appliance run at least 2 hours on the higher settings before putting food in the compartment.
- Prepare food in small portions to enable it to be rapidly and completely frozen and make it possible to subsequently thaw only the quantity required.
- Wrap up the food in aluminum foil or polyethylene food wraps which are airtight.
- Do not allow fresh, unfrozen food to touch the food which is already frozen to avoid patrial defrosting.

- It is recommended to label and date each frozen package in order to keep track of the storage time.

Hints for fresh food refrigeration

- Ensure that frozen food has been stored correctly by the food retailer .
- Once defrosted, food will deteriorate rapidly and should not be re-frozen.
- Do not exceed the storage period indicated by the food manufacturer.

Switching off your appliance

- If the appliance needs to be switched off for an extended period, the following steps should be taken to prevent mould on the appliance.
  1. Remove all food.
  2. Remove the power plug from the mains socket.
  3. Clean and dry the interior thoroughly.
  4. Ensure that all the doors are wedged open slightly to allow air to circulate.

Troubleshooting

If you experience a problem with your appliance or are concerned that the appliance is not functioning correctly, you can carry out some easy checks before calling for service, please see below.

Warning

Don't try to repair the appliance yourself. If the problem persists after you have made the checks mentioned below, contact a qualified electrician, authorized service engineer or the shop where you purchased the product.

Warning

Risk of child entrapment. Before you throw away your old refrigerator or freezer:
- Take off the doors.
- Leave the shelves in place so that children may not easily climb inside.

Problem	Possible cause & Solution
Appliance is not working correctly	Check whether the power cord is plugged into the power outlet properly.
	Check the fuse or circuit of your power supply, replace if necessary.

Problem	Possible cause & Solution
Appliance is not working correctly	The ambient temperature is too low. Try setting the chamber temperature to a colder level to solve this problem.
	It is normal that the refrigerator is not operating during the automatic defrost cycle, or for a short time after the appliance is switched on to protect the compressor.
Odours from the compartments	The interior may need to be cleaned.
	Some food, containers or wrapping cause odours.
Noise from the appliance	The sounds below are quite normal: • Compressor running noises. • Air movement noise from the small fan motor in the freezer compartment or other compartments. • Gurgling sound similar to water boiling. Popping noise during automatic defrosting. • Clicking noise before the compressor starts.
	Other unusual noises are due to the reasons below and may need you to check and take action: • The cabinet is not level. • The back of appliance touches the wall. • Bottles or containers knocking against each other.
The motor runs continuously	It is normal to frequently hear the sound of the motor, it will need to run more when in following circumstances: • Temperature setting is set colder than necessary. • Large quantity of warm food has recently been stored within the appliance. • The temperature outside the appliance is too high. • Doors are kept open too long or too often. • After your installing the appliance or it has been switched off for a long time.

Problem	Possible cause & Solution
A layer of frost occurs in the compartment	Check that the air outlets are not blocked by food and ensure food is placed within the appliance to allow sufficient ventilation. • Ensure the door can be fully closed . To remove the frost, please refer to the cleaning and care chapter.
Temperature inside is too warm	You may have left the doors open too long or too frequently; • Or the doors are kept open by some obstacle; • Or the appliance is located with insufficient clearance at the sides, back and top.
Temperature inside is too cold	Increase the temperature by following the “Display controls” chapter.
Doors can’t be closed easily	Check whether the top of the refrigerator is tilted back by 10-15mm to allow the doors to self close, or if something inside is preventing the doors from closing.
Water drips on the floor	The water pan (located at the rear bottom of the cabinet) may not be properly leveled, or the draining spout underneath the top of the compressor depot may not be properly positioned to direct water into this pan, or the water spout is blocked , or the water is not fully inserted into the connector. • You may need to pull the refrigerator away from the wall to check the pan, spout and connector. • Check if the refrigerator is power-off for a long time, this may cause the ice in the bucket to melt into water, and flow to the floor.
The light is not working	• The LED light may be damaged. Refer to replace LED lights in cleaning and care chapter. • The control system has disabled the lights due to the door being kept open too long, close and reopen the door to reactivate the lights.

Problem	Possible cause & Solution
Ice is not dispensing	• Did you wait for 10 hours after installation of the water supply line before making ice? if it is not sufficiently cool, it may take longer to make ice, such as when first installed. • Is the water line connected and the water valve open? • Did you manually stop the ice making function? Make sure you have set the Cubed or Crushed mode on. • Is there any ice blocked within the ice maker bucket or ice chute? • Is the freezer temperature too warm? Try setting the freezer temperature lower.
Water dispenser is not functioning	• Is the water storage box installed accurately? Makesure there is enough water in the water storage box. • Is water line broke or bent? Make sure the water line is unblocked and clear of any obstruction. • Is the water storage box frozen for the refrigerator temperature is too low? Try selecting a warmer setting on the display panel. • Is the water pump working?
You can hear water bubbling in the refrigerator	• This is normal. The bubbling comes from the refrigerant coolant liquid circulating through the refrigerator.

Disposal of the appliance

It is prohibited to dispose of this appliance as household waste.

Packaging materials

Packaging materials with the recycle symbol are recyclable. Dispose of the packaging into a suitable waste collection container to recycle it.

Before disposal of the appliance

1. Pull out the mains plug from the mains socket.
2. Cut off the power cord and discard with the mains plug.

Warning

Refrigerators contain refrigerant and gases in the insulation.
Refrigerant and gases must be disposed of professionally as they may cause eye injuries or ignition. Ensure that tubing of the refrigerant circuit is not damage prior to proper disposal.

	Correct Disposal of this product
	This marking indicates that this product should no be disposed with other household wastes throughout the EU. To prevent possible harm to the environment or human health from uncontrolled waste disposal, recycle it responsibly to promote the sustainable reuse of material resources. To return your used device, please use the return and collection systems or contact the retailer where the product was purchased. They can take this product for environmental safe recycling.

One Year Limited Warranty

Manufacturer provides a limited warranty for each new refrigerator to be free from defects in material and workmanship for a period of 1 year from the date of purchase. Manufacturer agrees to remedy any such defective inside accessory components such as door panels, door shelves, racks, handles, casters, bins and drawers or to furnish a new unit if the unit proves to have failed, at the company's option, for one year from your original date of purchase.

In the event the unit requires replacement or refund under the terms of this limited warranty, the Buyer is responsible for all transportation expenses to return the unit prior to receiving a replacement unit or refund. A copy of the dated sales receipt/invoice is required to receive benefits of this limited warranty.

This limited warranty covers appliances in use within the continental United States, Alaska, and Hawaii, and Puerto Rico.

This limited warranty does not cover the following:

1. Products with original serial numbers that have been removed, altered or cannot be readily determined.
2. Products that have been transferred from its original owner to another party or removed outside the USA.
3. Rust on the interior or exterior of the unit.
4. Damages due to shipping damage or improper installation.
5. Damages due to misuse or abuse.
6. Service calls, repairs, and labor expenses for any purpose.
7. Content losses and food spoilage due to failure of the unit.
8. Punctures to the evaporation system due to improper defrosting of the unit.
9. Replacement or resetting of house fuses or circuit breakers.
10. Failure or defects of this product if used for other purposes than its intended purpose or used other than in accordance with the provided instructions.
11. Disposal costs for failed unit not returned to Manufacturer.
12. Any delivery/installation costs incurred as the result of a unit that fails to perform as specified.
13. Expenses for travel and transportation for product if you are exchanging or returning the unit.
14. Expenses related to the removal and re-installation of your unit or for making the unit accessible, such as removal of trim, cupboards, shelves, etc. or if not installed in accordance with the provided installation instructions.
15. Damages to the finish of the unit or home incurred during installation, including but not limited to floors, cabinets, walls, etc.
16. Damages caused by external causes such as abuse, misuse, inadequate power supply, accidents, fires, or acts of God.
17. Refunds for returned products are limited to the price paid for the unit per the sales receipt.

Disclaimer of Implied Warranties, Limitation of Remedies and Exclusions:

EXCEPT FOR THE EXPRESS WARRANTIES SET FORTH HEREIN, MANUFACTURER MAKES NO WARRANTY WHATSOEVER (OR THE SHORTEST PERIOD ALLOWED BY LAW) REGARDING THE GOODS, INCLUDING ANY (1) WARRANTY OF MERCHANTABILITY; (2) WARRANTY OF FITNESS FOR A PARTICULAR PURPOSE; (3) WARRANTY OF TITLE; OR (4) WARRANTY AGAINST INFRINGEMENT OF INTELLECTUAL PROPERTY RIGHTS OF A THIRD PARTY; WHETHER ARISING BY LAW, COURSE OF DEALING, COURSE OF PERFORMANCE, USAGE OF TRADE, OR OTHERWISE. BUYER ACKNOWLEDGES THAT IT HAS NOT RELIED ON ANY REPRESENTATION OR WARRANTY MADE BY MANUFACTURER, OR ANY OTHER PERSON ON MANUFACTURER'S BEHALF. REPLACEMENT OF UNIT AND LISTED PARTS IN ACCORDANCE WITH THE TERMS HEREIN, IS YOUR SOLE AND EXCLUSIVE REMEDY UNDER THIS LIMITED WARRANTY. MANUFACTURER IS NOT LIABLE FOR INCIDENTAL OR CONSEQUENTIAL DAMAGES AND NO REPRESENTATIVE OR PERSON IS AUTHORIZED TO ASSUME FOR MANUFACTURER ANY OTHER LIABILITY IN CONNECTION WITH THE SALE OF THIS PRODUCT. UNDER NO CIRCUMSTANCE IS THE CONSUMER PERMITTED TO RETURN THE UNIT TO MANUFACTURER WITHOUT THE PRIOR WRITTEN CONSENT OF MANUFACTURER.

Customer Service, (toll free: 888-411-7118) between the hours of 9:00 am and 6:00 pm EST
EMAIL: Criterion@hisense.com

⚠ **A CALIFORNIA RESIDENTS ONLY-WARNING:** Cancer and Reproductive Harm-www.P65Warnings.ca.gov

Customer Service, (toll free: 888-411-7118) between the hours of 9:00 am and 6:00 pm EST
EMAIL: Criterion@hisense.com