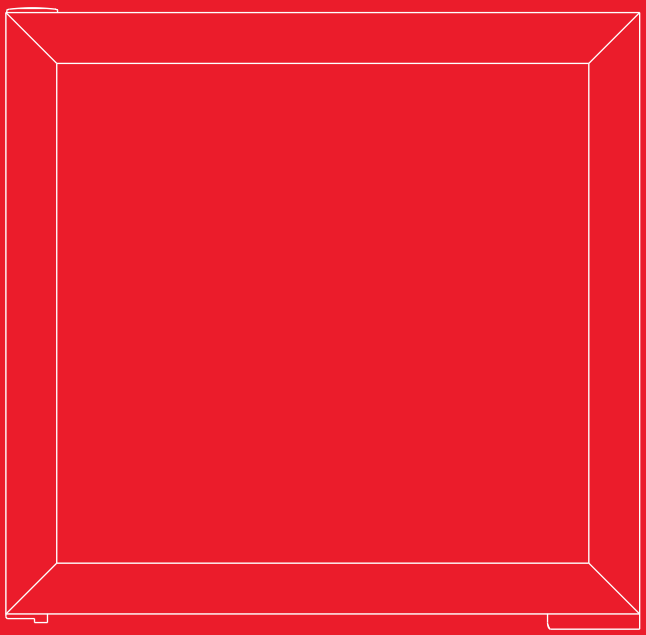

This Is A Manual.

Keep Cool
Beverage Refrigerator
1.7 Cubic Feet

BEFORE FIRST USE:

To prevent any internal damage, it is very important to keep refrigeration units (like this one) upright throughout their journey. Please leave it standing upright and outside the box for **24 HOURS** before plugging it in.

Important Safety Instructions

When using electrical appliances, basic safety precautions should always be followed to reduce the risk of explosion, fire, electrical shock, and/or injury to persons. If physical injury or damage is caused by failure to follow these instructions, the warranty does not apply.

- Keep ventilation openings, in the appliance enclosure or in the built-in structure, clear of obstruction.
- Keep flammable materials and vapors, such as gasoline, away from beverage center.
- Do not store explosive substances, such as aerosol cans with flammable propellant, in this appliance.
- Do not use extension cords or adapters.
- This appliance is intended to be used in households and similar applications, such as staff kitchen areas in shops, offices and other working environments; hotels, motels and other residential type environments; bed and breakfast type environments; catering and similar non-retail applications.
- Do not pull the power cord when pulling the power plug of the beverage cooler. Please firmly grasp the plug and pull it out from the socket directly.
- The refrigerant of this product is R600a, which is flammable. Make sure not to damage the cooling system during transportation and installation.

Warnings related to electricity

- Do not damage the power cord under any condition.
- This appliance must be grounded due to the event of an electrical short circuit.
- This appliance is equipped with a grounded wire and a grounded plug. Plug into a properly installed grounded 3 prong outlet.
- The beverage cooler uses an AC power supply of 120V/60 Hz.
- For your safety, don't place electric devices on top of the cooler, like microwaves or electric kettles, and don't store your beverage cooler inside pantries.

Three-pronged (grounding) plug

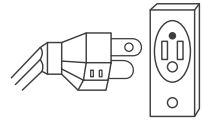

Properly polarized and grounded outlet

Warnings related to use

- Make sure the cooler is placed in a well-ventilated, indoor environment on flat, sturdy ground (rotate left or right to adjust the wheel to level if unstable).
- Be careful not to get fingers or dangling accessories caught in the cooler door.
- This cooler and its packaging are not intended to be played with or used by children. If a child is using the cooler, it must be with adult supervision to avoid injury.
- Keep the cooler out of moist, damp, or humid environments and situations, so as not to damage the electrical insulation.
- Do not use a base, cooler door, etc. as pedal or support.
- Do not place heavy objects on top of the cooler to prevent accidental damage or injury.
- Do not use this cooler to store fresh foods, such as meats, vegetables, fruits, etc. This product can only be used to chill beverages.

Important Safety Instructions

Warnings related to placing items

- Do not put flammable, explosive, volatile, or highly corrosive items in the cooler.
- Do not place flammable items near the cooler to avoid a fire hazard.
- This product is for household refrigeration appliances, mainly used for the storage of beverages. It's not used for other purposes, such as storage of blood, drugs, and biological products.

Warnings related to disposal

Suffocation Hazard:

Remove door from your old beverage cooler.

Failure to do so can result in death or brain damage.

Before disposing your beverage cooler:

1. Take off the doors.
2. Leave the shelf racks in place so that children may not easily climb inside.

All refrigeration products contain refrigerants, which under federal law must be removed prior to product disposal. Check with a qualified disposal company for instructions.

SAVE THESE INSTRUCTIONS

For Household Use Only

Parts List

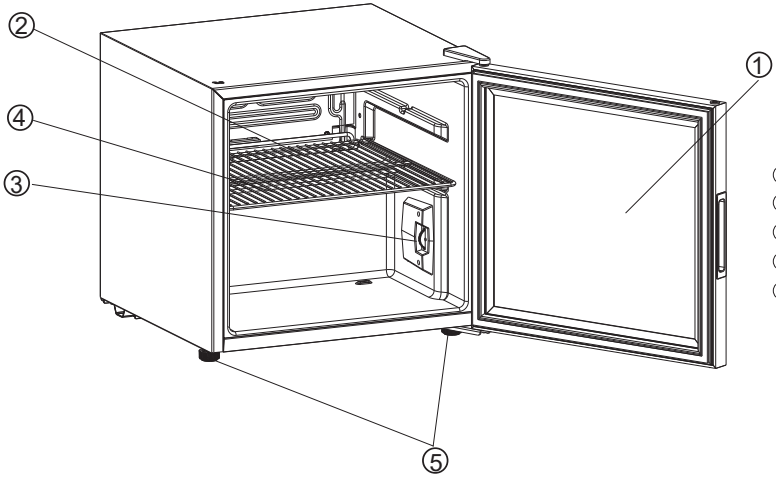

① Glass Door
② Wire Shelf Racks
③ Temperature Knob
④ Base Rack
⑤ Leveling Leg

PLACEMENT

- Before using the cooler, remove all packaging materials, including bottom cushions, foam pads, and tape inside the cooler. Tear off the protective film on the door and the cooler body.
- Make sure the cooler is placed in a well-ventilated, indoor environment on flat, sturdy ground (turning clockwise to raise the appliance, and counter-clockwise to lower the appliance).
- Leave a minimum of 2" between each side of the appliance and the wall. The top and back of the appliance should have a minimum 2" clearance. This allows for proper air circulation.
- Avoid putting the cooler in direct sunlight or too close to a heat source. Keep a safe distance of at least 12 inches between the cooler and a stove or furnace if it can't be avoided. We also advise applying an insulation board in that case.
- Install the appliance in a location where the temperature is between 55°F and 90°F. For best performance, do not install the beverage cooler behind a cabinet door.

Operating Instructions

⚠ WARNING



Electrical Shock Hazard
Plug into a grounded 3 prong outlet.
Do not remove ground prong.
Do not use an adapter.
Do not use an extension cord.
Failure to follow these instructions can result in death, fire, or electrical shock.

INSTALLATION

⚠ WARNING **Excessive Weight Hazard**

Use two or more people to move and install beverage cooler. Failure to do so can result in back or other injury.

- Keep in upright position for 24 hours before initial power up.
- Plug into a grounded outlet.
- The temperature of the beverage cooler can be controlled manually by the Temperature Knob. Setting 1 is the warmest setting, while setting 7 is the coldest. When you turn the unit on for the first time, set the dial on 4 and allow 24 hours for the refrigerator to reach this temperature. Turn the Temperature Knob to adjust to the temperature that best meets your needs. Turning the dial to 0 stops the cooling but does not turn the power off.

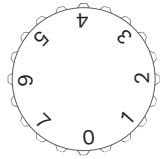

- Reducing the frequency of door opening can lower power consumption.
- Before loading cans, cool the unit to the set temperature and do not load too many cans at one time.

BEVERAGE STORAGE

- The maximum capacity is 51 cans when laid vertically.
- To achieve the maximum capacity, place 30 cans in the top rack as shown below in Figure A.
- Next, place 21 cans in the bottom rack as shown below in Figure B.
- Store beverages in sealed bottles only.

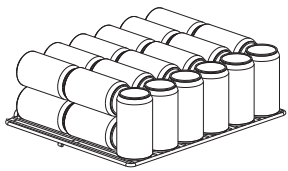

Fig. A

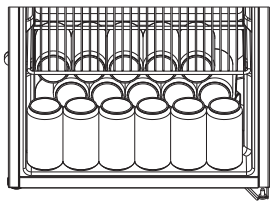

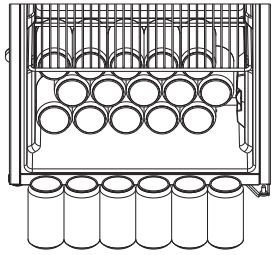

Fig. B

Operating Instructions

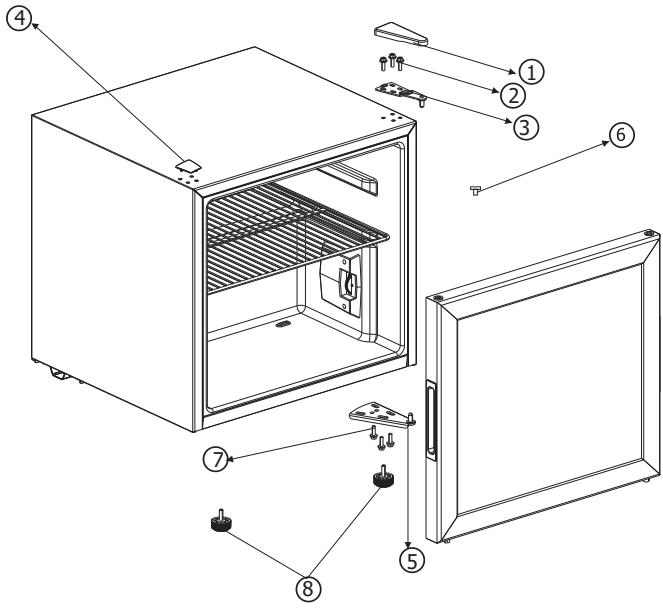

① Top hinge cover
② Top hinge screws
③ Top hinge
④ Cabinet plug
⑤ Bottom hinge
⑥ Door handle plug
⑦ Bottom hinge screw
⑧ Leveling legs

Do not tilt the appliance over 45° as possible damage to the sealed system may occur.

Follow steps below if you want to change the door orientation from left-hinge to right-hinge:

1. Remove top hinge cover and 3 top hinge screws which are below it. Then remove top hinge.
2. Remove 1 cabinet plug and 1 door handle plug.
3. Remove the door.
4. Remove right and left leveling legs.
5. Remove the bottom hinge and 3 bottom hinge screws.
6. Install the bottom hinge on the other side of the leveling legs with 3 bottom hinge screws.
7. Install right and left leveling legs. There are two holes below the beverage cooler to fit the two leveling legs.
8. Install the door.
9. Install the top hinge on the other side with 3 top hinge screws.
10. Install top cover above the top hinge and install 1 cabinet plugs on the other side.
11. Adjust the leveling legs.

Specifications

Electric shock protection type		I
Capacity (cu. ft.)		1.7
Voltage (V)		120
Frequency (Hz)		60
Current (A)		0.95
Energy consumption (KW.h/yr)		169
Refrigerant		R600a/0.46oz
Net Weight (lbs)		42.54
Dimension (inch)	Width	18.9
	Depth	21
	Height	18.5

Troubleshooting

Problem	Possible Causes & Solutions
Cooler isn't cool	The door is being opened too often. Or the cooler is too full of bottles or cans. Reduce the frequency of opening the door. Lower the temperature if needed.
Cooler is not refrigerating	The power is out or the cooler isn't plugged in. Unplug and wait for 10 seconds, plug in again.
Vibration noise	The appliance is placed on uneven ground, or touching the wall. Adjust the leveling legs, or move away from the wall.
Condensation on the glass door	This is normal during high humidity. It can also happen when the door is opened too frequently. Simply wipe away any drops of water.
Compressor runs too long or cycles on/off frequently	This is normal during hot weather. It can also happen if the door is not closed tightly. Or temperature setting is at coldest. Make sure that nothing inside the cooler is causing the door open. Adjust temperature to a warmer setting.

Cleaning & Maintenance

DISCONNECTING THE BEVERAGE COOLER

Unplug the power plug from the socket to disconnect the cooler.

CLEANING YOUR BEVERAGE COOLER

Dusting behind the cooler and on the ground will improve the cooling effect and save energy. The interior of the cooler should be cleaned to avoid any odor. Follow the cleaning procedure below:

1. Unplug the cooler.
2. Wipe the door and door seal with warm water and mild detergent. Rinse thoroughly and dry with a clean, soft cloth.
3. Use a mixture of warm water and baking soda (about 1-2 tablespoons per quart of water) to clean the interior of the cooler.
4. Use a sponge or soft cloth and make sure to wipe excess moisture out before cleaning around the controls.
5. Rinse thoroughly with warm water and dry with a clean soft cloth.
6. Reconnect the cooler when the cooler is clean and dry.

Note:

Do not use hard brushes, wire brushes, abrasives, organic solvents, boiling water, acid, or alkaline items as this may damage the cooler surface and interior.

MOVING

WARNING **Use two or more people to move and install beverage cooler. Failure to do so can result in back or other injury.**

1. Unplug the cooler.
2. Remove all beverage and securely tape down all loose items inside.
3. Tape the door shut. Do not pull the door or door handle when moving.
4. Do not tilt over 45 degrees as possible damage may occur to the sealed system when moving.
5. Avoid strong vibration when moving.

POWER FAILURE

When a power failure occurs, the beverage cooler can normally keep beverage cool for several hours. Do not put additional beverage into the appliance during a power failure, and avoid opening the door. The beverage cooler will automatically resume working when the power has been restored.

VACATION

Remove all beverage while you plan to leave for an extended period of time.

Turn off and unplug the appliance. And leave the door open.

Warranty Information

Vremi offers a 12-month warranty on all of our products purchased new and unused from Vremi LLC or an authorized reseller, with an original proof of purchase and where a defect has arisen, wholly or substantially, as a result of faulty manufacturing, parts or workmanship during the Warranty Period. The warranty does not apply where damage is caused by other factors, including but without limitation: (a) normal wear and tear; (b) abuse, mishandling, accident or failure to follow operating instructions; (c) exposure to liquid or infiltration of foreign particles; (d) servicing or modification of the product other than by Vremi. These are our general terms for the warranty service, but we always urge our customers to reach out to us with any issue, regardless of warranty terms. If you experience an issue with a Vremi product, please contact us at support@vremi.com, and we will do our best to resolve it for you.

Warning

This manual is to be used with all items with the model numbers

VRM050701N

Keep all plastic bags away from children.

Drop Us A Line

CHAT WITH US

vremi.com/chat

CALL US

(646) - 490 - 9904

EMAIL US

support@vremi.com

