EQUATOR®
ADVANCED Appliances

RV REFRIGERATOR
12V DC

Model - RF 12-282

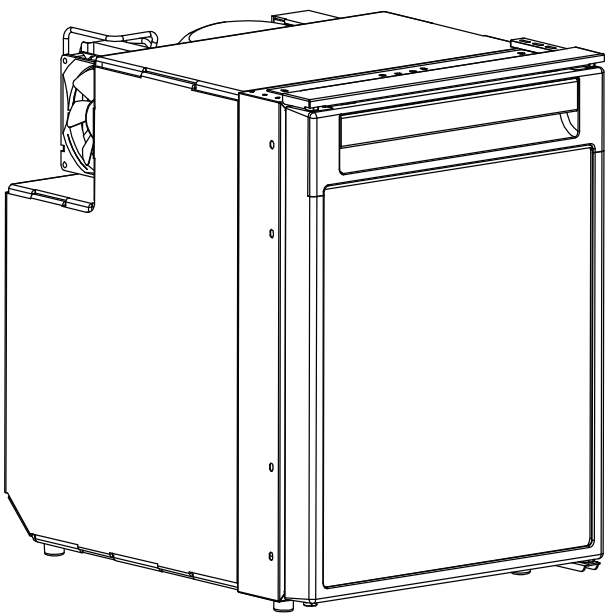

OWNER'S MANUAL

Please read the instructions carefully and keep for future reference. Information may be updated from time to time so please refer to the manual online for the latest version of the manual.

Warranty

Equator Appliances undertakes to the consumer-owner to repair or, at our option, to replace any part of this product which proves to be defective in workmanship or materials under normal personal, family or household use, in the USA and Canada, for a period of one year from the date of original purchase. For commercial use, the product is warranted for a period of 90 days. During this period, we will provide all labor and parts necessary to correct such defect, free of charge, if the appliance has been installed and operated in accordance with the written instructions with the appliance. Ready access to the appliance, for service, is the responsibility of the consumer-owner. Service would be provided from Monday to Friday between normal business hours.

Exclusions

In no event shall Equator Appliances be liable for incidental or consequential damages or for damages resulting from external causes such as abuse, misuse, incorrect voltage or acts of God. This warranty does not cover service calls which do not involve defective workmanship or materials covered by this warranty. Accordingly, diagnosis and repair costs for a service call which does not involve defective workmanship or materials will be the responsibility of the consumer-owner.

Specifically, the following work is not covered under warranty and does not constitute warranty work:

Installation - e.g. Insufficient spacing around appliance
Maintenance - e.g. Cleaning the appliance using solvents
Mishandling - e.g. Breakage of door and shelves

Most work is covered. The defining factor is, has the machine malfunctioned (Equator Appliances is responsible) or has the customer omitted or done something to cause the appliance to malfunction (customer is responsible). Some states do not allow the exclusion or limitation of incidental or consequential damages, so the above limitation of exclusion may not apply to you.

WARRANTY SERVICE

This warranty is given by:
Equator Appliances
10222 Georgibelle Drive, Suite 200,
Houston, Texas 77043-5249

For Customer Service:

Appliance Desk
Phone/Text: 1-800-776-3538
Email: Service@ApplianceDesk.com
Web: www.ApplianceDesk.com
Business hours: 9:00 am to 5:00 pm weekdays

You can register your warranty by either of the following methods:

1. Scan QR Code

1. Open Smart Phone
2. Open Photo
3. Scan QR Code
4. Click the Link

2. Register online at ApplianceDesk.com/Warranty

GENERAL

Since it is the responsibility of the consumer-owner to establish the warranty period by verifying the original purchase date, Equator Appliances recommends that a receipt, delivery slip or some other appropriate payment record be kept for that purpose.

This warranty gives you specific legal rights, and you may also have other rights which vary from State to State.

All rights reserved. Manual subject to change without notice

Safety

Please always follow the safety precautions listed below:

- Do not put acid or flammable or volatile materials inside the appliance.
- Do not puncture or damage refrigerant tubing.
- If the refrigerator uses AC power supply, ensure that the voltage is equipped with leakage breaker.
- Unplug the unit immediately if you find any abnormal smell or smoke, and contact Customer Service.
- Use a dedicated power outlet and a three prong power socket, that is properly grounded.
- Do not use extension cords or ungrounded two prong adapters.
- Do not use the power cord or plug if it is damaged.
- When removing the power plug, do not pull on the cord. Grasp the plug firmly and pull it out from the socket.
- Unplug the unit first when doing maintenance or repair and when replacing the light bulb.
- Keep ventilation openings free of obstructions.
- This appliance is not intended for use by children or persons with reduced physical, sensory or mental capabilities, or lack of experience and knowledge, unless they have been given supervision or instruction concerning use of the appliance by a person responsible for their safety. Children should be supervised to ensure that they do not play with the appliance.

Safe Disposal

- Before discarding the refrigerator, remove the door in order to prevent risk of child entrapment.
- Dispose off this appliance in accordance with local regulations.

State of California Proposition 65 Warnings:
WARNING:This product contains one or more chemicals known to the State of California to cause cancer.
WARNING:This product contains one or more chemicals known to the State of California to cause birth defects or other reproductive harm.

Placement

Ensure the maximum tilt of the refrigerator does not exceed 30 degrees. Ensure the ambient temperature range is 61˚F – 109˚F (16˚C – 43˚C). Install the refrigerator, ensuring there is adequate space on the sides and on the top to allow hot air that is generated to be vented. See figure below for the required space.

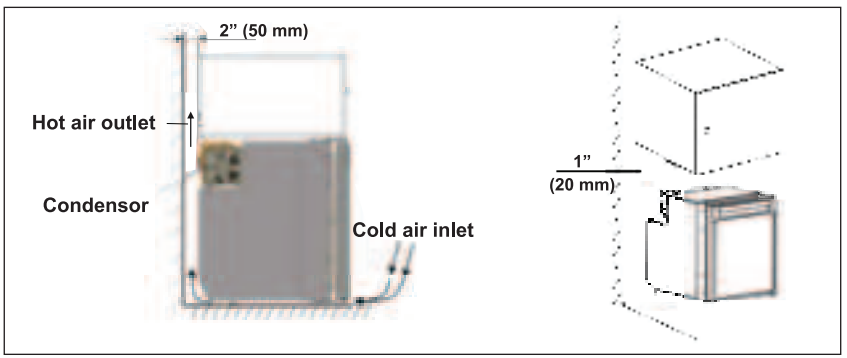

Under normal use, the refrigerator will produce condensate. Wipe the condensate regularly to avoid build up of moisture. You can also drain the condensate through an outlet. To install a drain connection:

- Connect a 0.4" (10mm) inner diameter hose **(not included)** to the drain outlet at the bottom of the unit and ensure it drains into a pan. Tilt the unit to access the outlet.
- Attach the Drain Joint.
- Remove the Drain Plug.

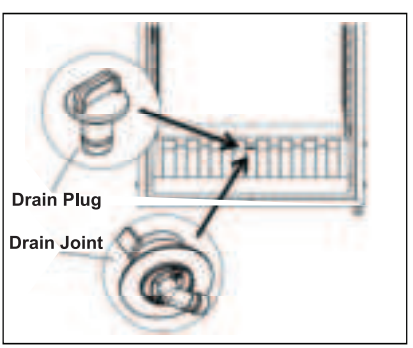

Installation

When the refrigerator has been properly positioned, install the unit as follows:

- Open the refrigerator door and locate 4 Screw Plugs on the sides.
- Remove the Screw Plugs.
- Attach the refrigerator to the sides, using 4 screws (not included).
- Press the Screw Plugs over the screws.

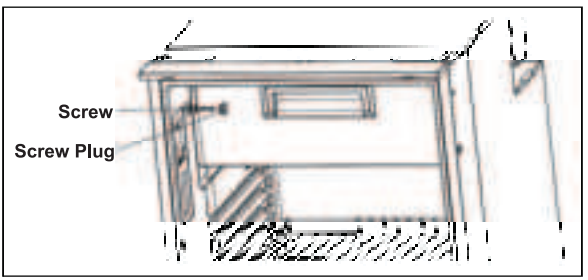

Door Reversal

The opening of the door can be reversed by moving the hinges from one side to the other side. See figure below.

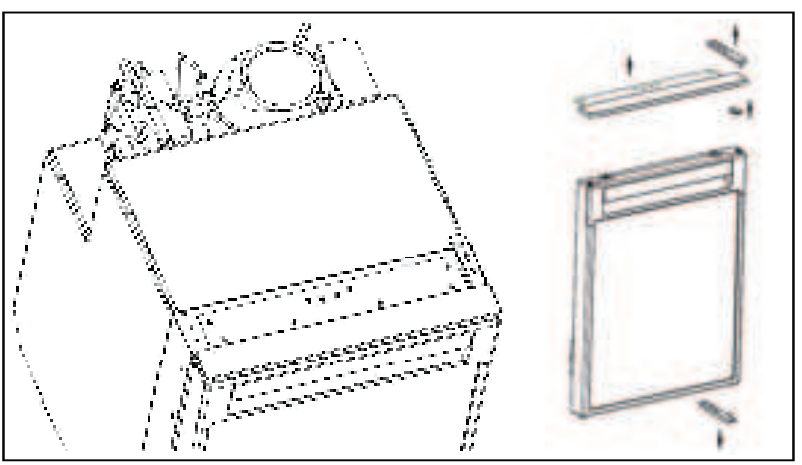

Connect the refrigerator to a DC power supply

Attention!
In order to avoid voltage drop and performance loss, please use shorter cables and avoid crossing. So avoid extra switches, plugs or power bars.

Before connecting the fast charging device, disconnect the refrigerator and other electrical loads from the battery. Over voltage will damage the electronic components of the device.

The refrigerator can be powered by 48W.

For safety, the refrigerator is also equipped with an electronic system to prevent polarity reversal. The device of refrigerator can protect the battery from polarity reversal and short circuit.

If the voltage is insufficient, the refrigerator will automatically shut down in order to protect the battery .

	12 V
OFF	10.4V
Start-up	11.7V

Determine the required cable section and cable length according to the figure.

Axis	Meaning	Unit
L	Cable length	m
φ	Cable section	mm^2

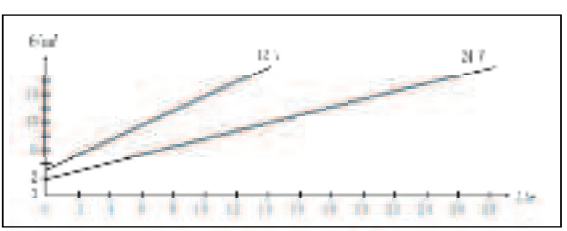

Attention!

Make sure the polarity is correct.

- Before starting the equipment for the first time, check whether the working voltage of the refrigerator matches the battery voltage (see the nameplate).
- The refrigerator is connected to a socket with at least 15 A (12 V) or 7.5 A (24 V) fuse protection. (see Figure)
- The red cable (Figure) connects to the positive pole of the battery.
- The black cable (Figure) connects to the negative pole of the battery.

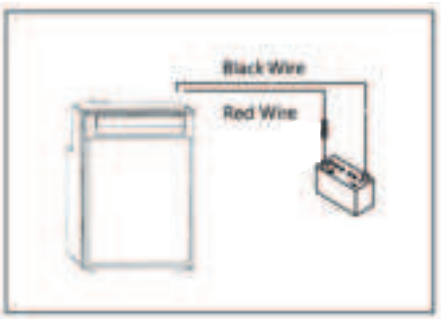

Refrigerator connected to AC voltage

Fatal danger!

If the refrigerator with AC power interface is operated on board, you must install a leakage circuit breaker between the AC power supply and the refrigerator. Specific operation content can consult relevant professionals.

When you connect the refrigerator to AC power supply, please follow the following steps:

- Connect the plug to the AC power socket (as shown in Figure).
- With the adapter (accessory), the refrigerator can work at AC voltage of 100 to 240V.

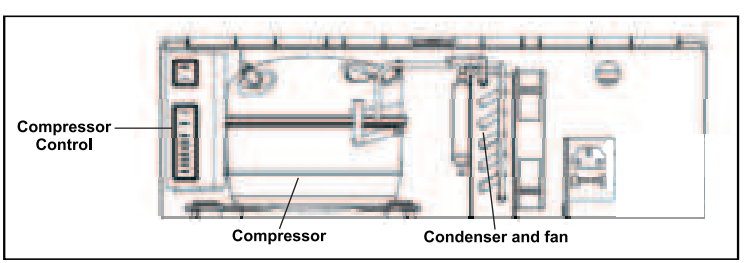

When the refrigerator is connected to AC voltage, do the following (see figure below):

Place the adapter at the back of the refrigerator.

Connect the adapter:

- Red cable – positive battery
- Black cable – negative battery

Plug the connector into the AC power socket.

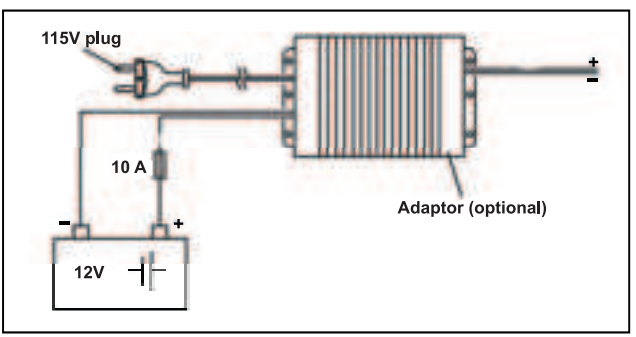

Maintenance

- Always unplug the refrigerator before cleaning.
- Clean inside, behind and around the refrigerator regularly, using water and mild detergent, and a damp cloth (not wet).
- Never use boiling water, harsh cleaning chemicals or abrasive materials.
- Check and clean the door gasket regularly to ensure that the door closes and seals.

Operation

The Control Panel is located inside the refrigerator on the side. Press the Power button to turn it on. The Compressor takes some time to start.

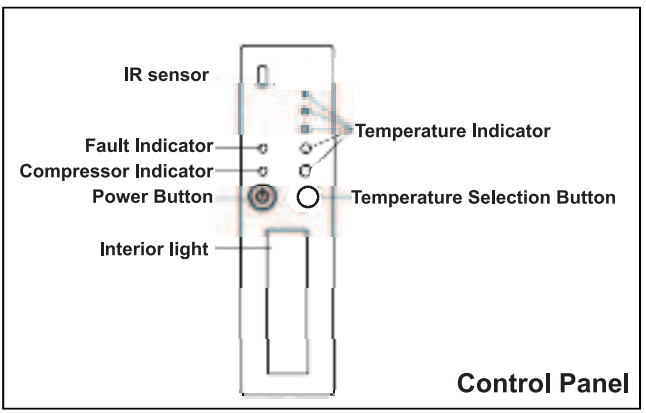

Temperature Setting

Press the Temperature Selection Button to select the level of cold from 5 settings:

- The top (smallest icon) is the least cold and the bottom (biggest icon) is the coldest setting.
- A blue indicator light illuminates to show the selected cold setting.

Defrost

To defrost the refrigerator, remove all items and press the Power button to turn o ffthe unit. Do not use mechanical devices or sharp implements to defrost the appliance.

Shut down

If the refrigerator will not be used for a long time:

- Remove all items.
- Press the Power button to turn o ffthe unit.
- Disconnect the power supply.
- Clean the unit thoroughly.
- Leave the door open and place the unit in a well-ventilated area to avoid buildup of odor.

Troubleshooting

Before calling for service, please check the following table.

PROBLEM	POSSIBLE CAUSE
Doesn't work	• Power is not on or the unit is not connected to power • Low voltage • A fuse may be blown or the circuit breaker tripped • Plug not fully inserted into the wall outlet
Internal temperature not cold enough	• Temperature setting is too warm • Door is not shut properly or opened frequently • Exhaust vent is obstructed • A large quantity of warm food has been placed in the unit • Close proximity to heat source or direct sunlight • Ambient temperature or humidity is very high
Appliance runs continuously	• Temperature setting is too cold • Door not shut properly or opened frequently • Exhaust vent is obstructed • A large quantity of warm food has been placed in the unit • Close proximity to heat source or direct sunlight • Ambient temperature or humidity is very high
Internal temperature is too cold	• Temperature setting is too cold
Noises	• Parts are expanding and / or the refrigerant is circulating; this is normal • Floor is not flat, and the unit is not placed in a stable position.
Doors cannot be closed properly	• The door is obstructed by items inside the unit. • The door gasket is not providing a good seal. Heat the gasket with a hair dryer.

Error Codes

A red light on the Control Panel flashes to indicate there is an error in the operation. The number of times the red light flashes, indicates the type of error. Each flash lasts for a quarter of a second. There is a pause after a series of flashes, as shown in the table below. The fault flashes repeatedly every four seconds in sequence.

Flash times	Possible causes	Solution
1	Line voltage	The power supply voltage is out of the set range
2	Fan over current	The current in the fan load circuit exceeds 1A
3	Compressor does not start	The differential pressure in the cooling system is too high (> 5 bar)
4	The speed is too low	If the cooling system is overloaded, the motor cannot maintain a minimum speed of 1850 rpm
5	The circuit is overheated	If the cooling system is overloaded or the temperature is set too high, the circuit will overheat
6	NTC Error	NTC with problem

Compressor not running (battery connected)

Problem	Possible Cause	Solution
U_{KL}=0V	The connection between the battery and the circuit is broken	Reconnect
	Main switch fault (if installed)	Replace the main switch
	Additional supply line fuse blown (if installed)	Replace the power supply line fuse
$U_{KL} \leq U_{ON}$	Low battery voltage	Charge the battery
Try to start $U_{KL} \leq U_{OFF}$	Loose wire, poor contact	Reconnect
	Low battery capacity	Change the battery
	Wire cross section too small	Replace the wire
Try to start $U_{KL} \geq U_{ON}$	The ambient temp is too high	
	Poor ventilation	Move the refrigerator to a well ventilated place
	The condenser is dirty	Clean Condenser
Compressor Pin Disconnected	Compressor Problem	Change the Compressor

U_{KL} Circuit positive terminal and negative terminal voltage

U_{ON} Circuit starting voltage

U_{OFF} Circuit break voltage

Compressor not running (connected to AC power supply)

Problem	Possible Cause	Solution
No Voltage	The power cord is disconnected	Re-connect
	Main switch fault (if installed)	Replace the main switch
	Additional supply line fuse blown (if installed)	Replace the power supply line fuse
There is voltage, but compressor is not running	Ambient temperature is too high	——
	Poor ventilation	Move the refrigerator to a well ventilated place
	The condenser is dirty	Clean Condenser
Compressor Pin disconnected	Compressor Problem	Change the Compressor

The cooling effect is poor and the internal temperature rises

Problem	Possible Cause	Solution
Long time/ continuous operation of compressor	The ambient temp is too high	
	Poor ventilation	Move the refrigerator to a well ventilated place
	The condenser is dirty	Clean Condenser
	Fan problem	Change the Fan
Abnormal compressor operation	Low battery voltage	Battery charging

Abnormal Sound

Possible Cause	Solution
A part of the refrigeration system cannot move freely (near the wall)	Remove the part carefully
There's a foreign object stuck between the cooler and the wall	Take out the foreign matter
Fan Noise	This is normal

Technical Specifications

Model	RF 12-282
Color	Silver
Capacity	2.82 cu.ft.
Electrical	12V DC
Fridge Temperature	41°F - 59°F
Freezer Temperature	-0.4°F
Weight (Net/Gross) lbs	39.24 / 45.19
Product Dimensions (HxWxD) inch	24.80 x 18.70 x 21.45