S/M No: RNU20IB001

Service Manual

Refrigerator

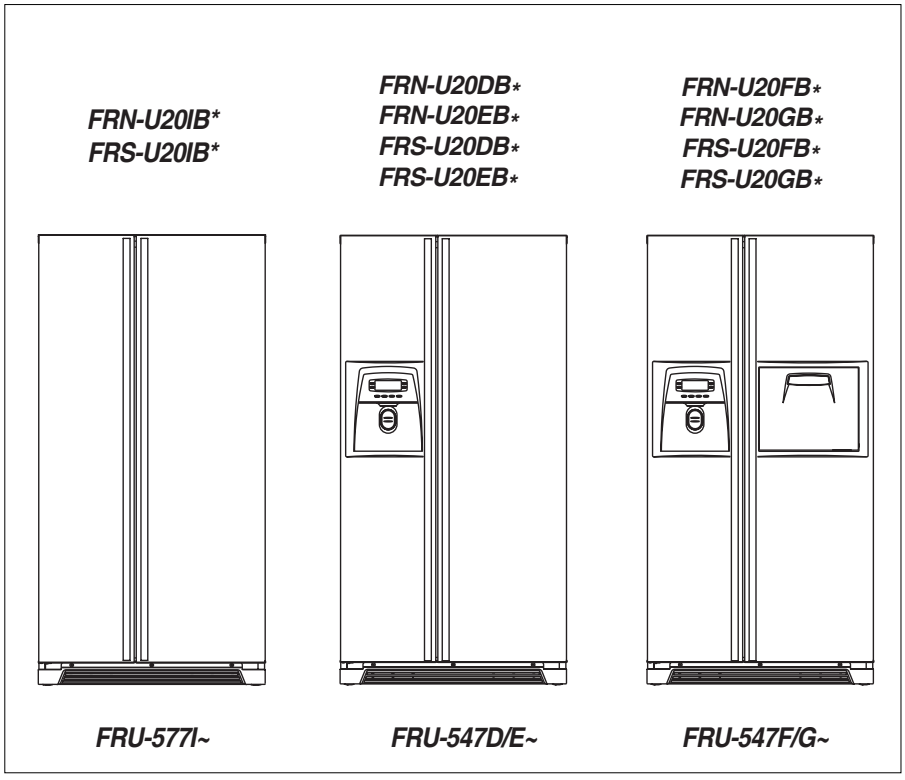

✔ Caution

: In this Manual, some parts can be changed for improving, their performance without notice in the parts list. So, if you need the latest parts information,please refer to PPL(Parts Price List) in Service Information Center

DAEWOO ELECTRONICS

- May, 2006

CONTENTS

1. WARNINGS AND PRECAUTIONS FOR SAFETY ----------2
2. EXTERNAL VIEW
2-1. External Size ----------3
2-2. Name of Each Parts ----------6
2-3. Cold Air Circulation ----------8
3. SPECIFICATION ----------9
4. OPERATION AND FUNCTIONS ----------11
5. CIRCUIT OPERATION
5-1. Power Circuit Diagram ----------31
5-2. Function of Each Sensor ----------32
5-3. Relay Function ----------34
5-4. Fan Function ----------36
6. DIAGRAM
6-1. Wiring Diagram ----------37
6-2. Circuit Diagram of Main PCB ----------39
7. COMPONENT LOCATE VIEW ----------43
8. HOW TO CHECK EACH PARTS
8-1. Hose Ice Maker Tube ----------45
8-2. Bracket Geared Motor ----------46
8-3. Dispenser Micro Switch ----------47
8-4. Dispenser Solenoid Valve ----------48
8-5. Main PCB ----------49
8-6. Ice Maker ----------51
9. TROUBLE DIAGNOSIS
9-1. Power Failure ----------53
9-2. Freezer Compartment ----------54
9-3. Refrigerator Compartment ----------60
9-4. Operation Noise of Refrigerator ----------65
9-5. Door ----------71
10. COOLING CYCLE HEAVY REPAIR
10-1. Summary of Heavy Repair ----------72
10-2. Precaution during Heavy Repair ----------73
10-3. Practical Work for Heavy Repair ----------74
10-4. Standard Regulations for Heavy Repair ----------76
10-5. Brazing Reference Drawing ----------77
11. INSTALLATION GUIDE
11-1. Installation Preparation ---------- 78
11-2. If the Refrigerator can not enter the Door ---------- 79
11-3. Refrigerator Leveling & Door Adjustment ----------80
11-4. Water Line Installation ---------- 82
11-5. Dispenser Water Flow ---------- 84
12. EXPLODED VIEW & PARTS LIST ----------85

1. WARNINGS AND PRECAUTIONS FOR SAFETY

Please observe the following safety precautions in order to use safely and correctly the refrigerator and to prevent accident and danger during repair.

1. Be care of an electric shock. Disconnect power cord from wall outlet and wait for more than three minutes before replacing PCB parts.
   Shut off the power whenever replacing and repairing electric components.

2. When connecting power cord, please wait for more than five minutes after power cord was disconnected from the wall outlet.

3. Please check if the power plug is pressed down by the refrigerator against the wall.
   If the power plug was damaged, it may cause fire or electric shock.

4. If the wall outlet is over loaded, it may cause fire.
   Please use its own individual electrical outlet for the refrigerator.

5. Please make sure the outlet is properly earthed, particularly in wet or damp area.

6. Use standard electrical components when replacing them.

7. Make sure the hook is correctly engaged.
   Remove dust and foreign materials from the housing and connecting parts.

8. Do not fray, damage, machine, heavily bend, pull out or twist the power cord.

9. Please check the evidence of moisture intrusion in the electrical components.
   Replace the parts or mask it with insulation tapes if moisture intrusion was confirmed.

10. Do not touch the icemaker with hands or tools to confirm the operation of geared motor.

11. Do not let the customers repair, disassemble and reconstruct the refrigerator for themselves.
    It may cause accident, electric shock, or fire.

12. Do not store flammable materials such as ether, benzene, alcohol, chemicals, gas, or medicine in the refrigerator.

13. Do not put flower vase, cup, cosmetics, chemicals, etc., or container with full of water on the top of the refrigerator.

14. Do not put glass bottles with full of water into the freezer.
    The contents shall freeze and break the glass bottles.

15. When you scrap the refrigerator, please disconnect the door gasket first and scrap it where children are not accessible.

2. EXTERNAL VIEWS

2-1. External Size

- FRS(N)-U20IB

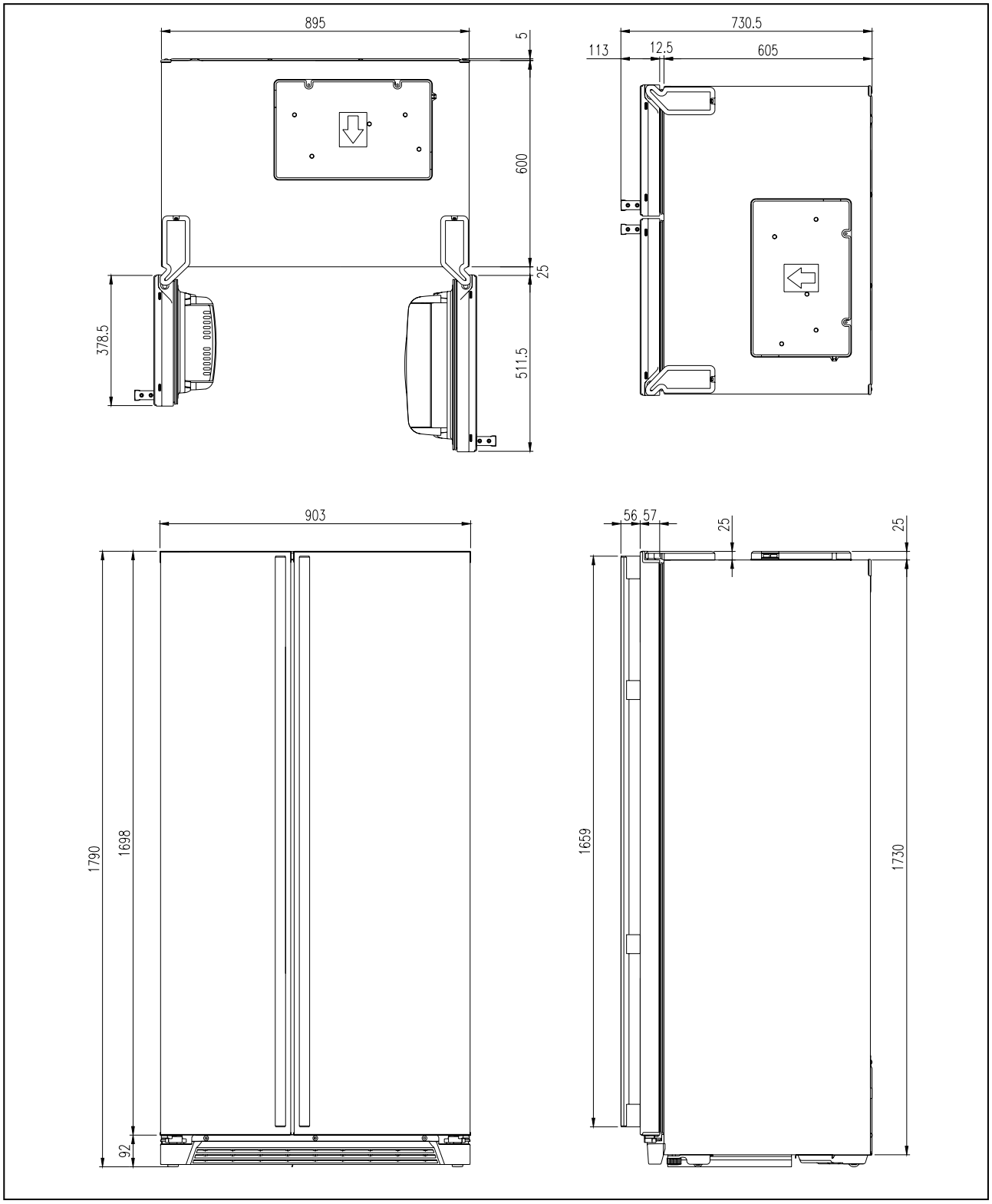

- FRS(N)-U20DB / EB

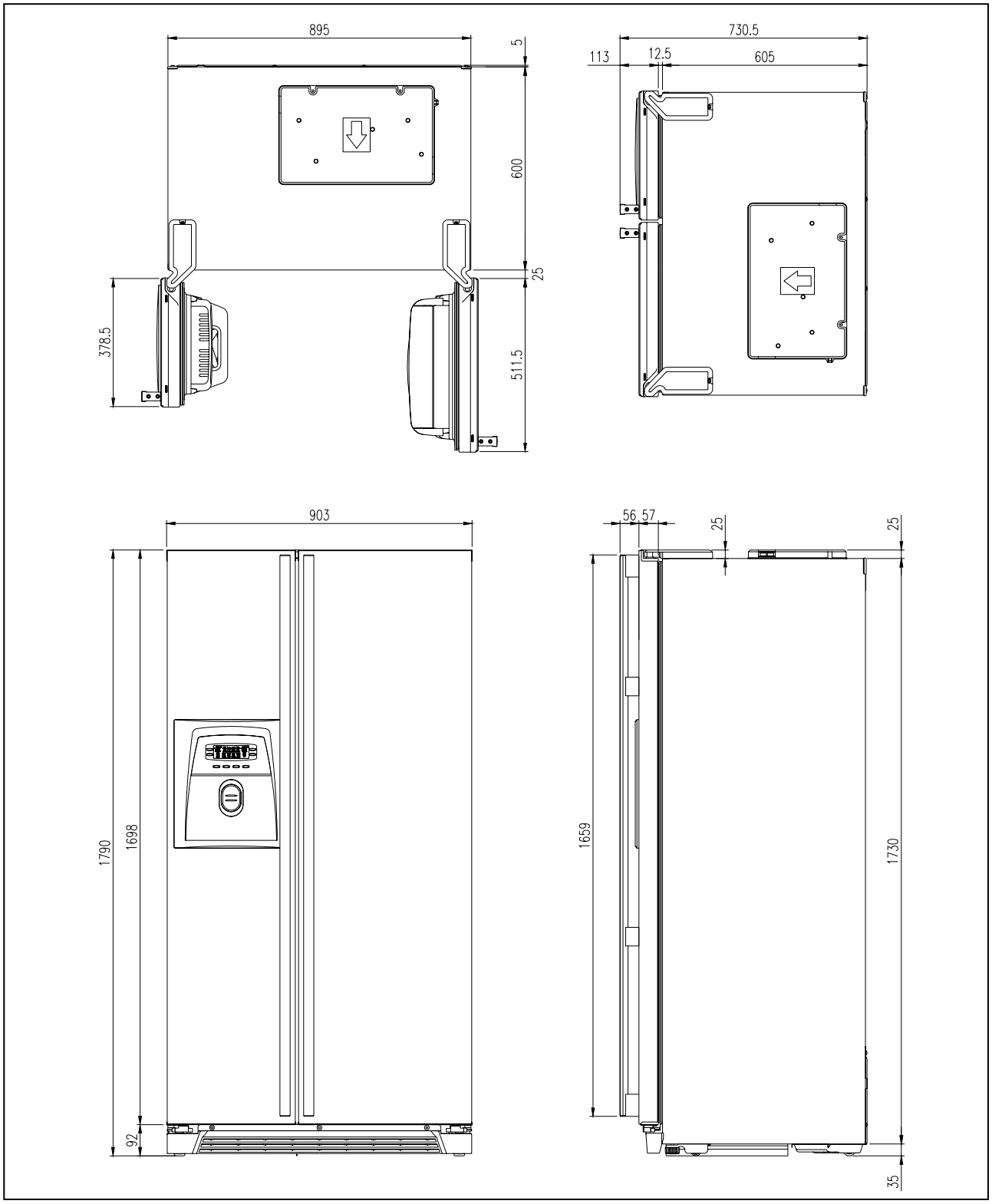

- FRS(N)-U20FB / GB

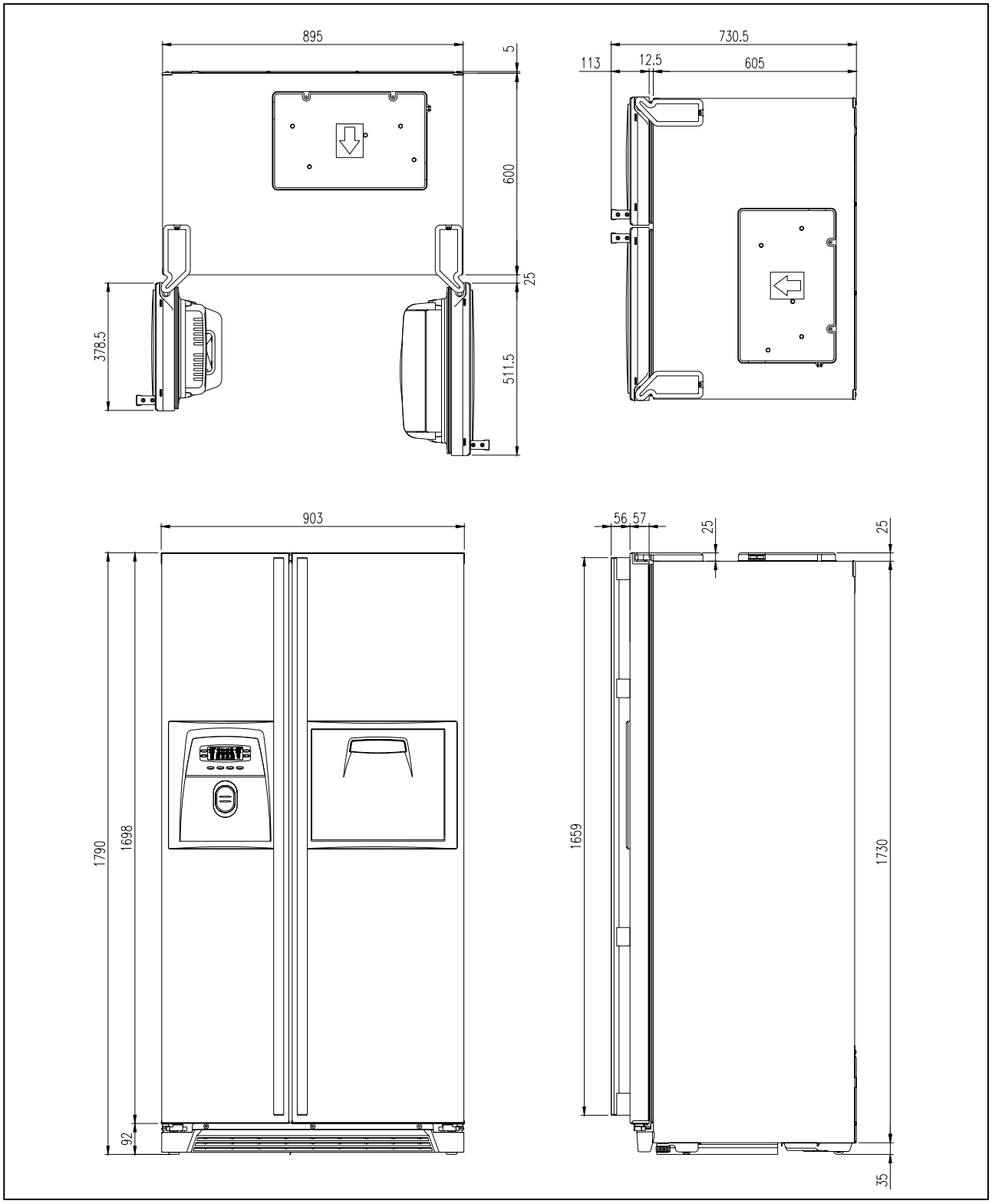

2-2. Name of Each Parts

- Basic Model

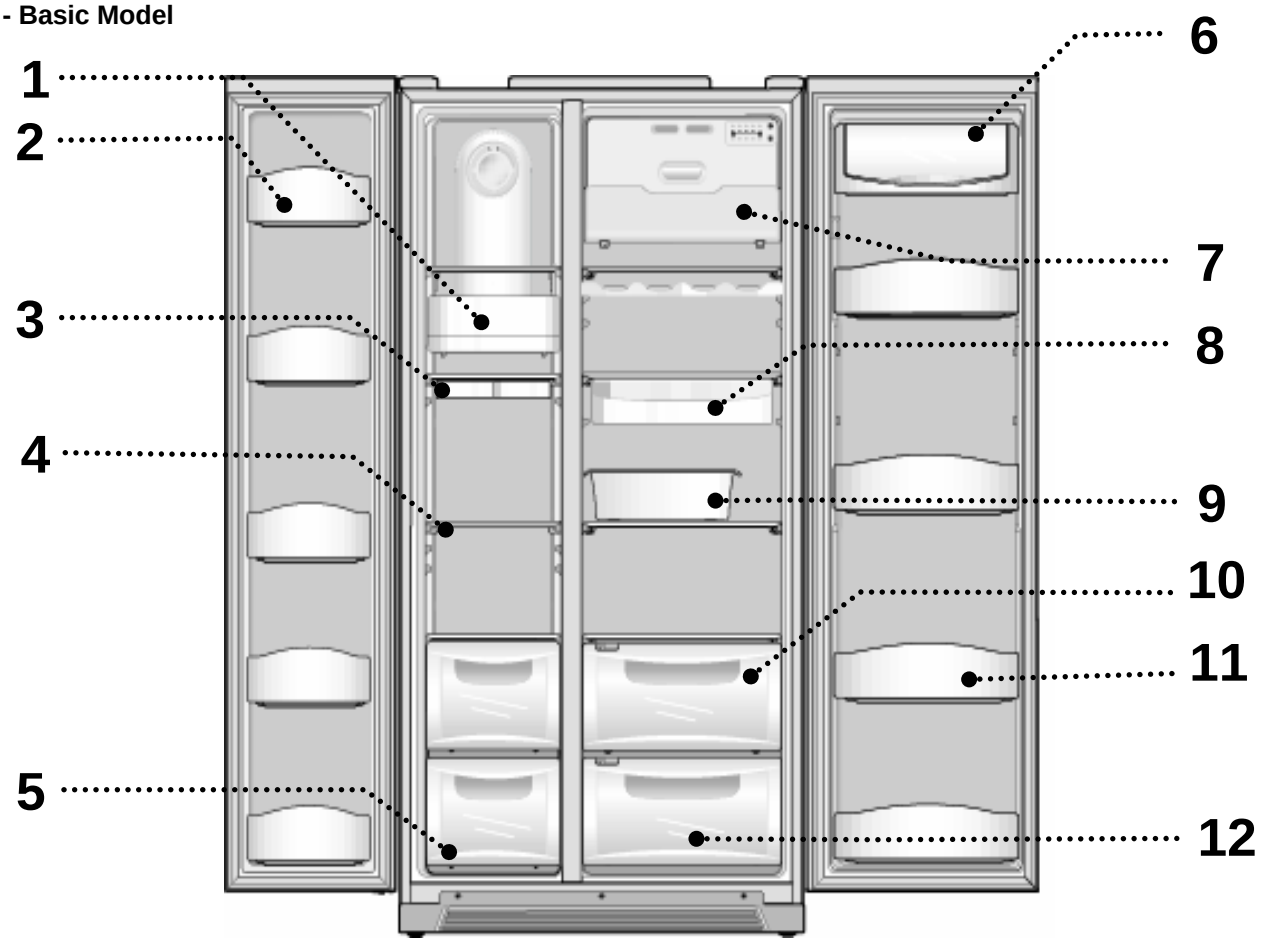

- Wine Rack is option

Freezer Compartment	Refrigerator Compartment
1. Freezer light	6. Dairy pocket
2. Freezer pocket	7. Refrigerator light
3. Ice tray	8. Chilled case
4. Freezer shelf	9. Movable Egg case
5. Freezer case	10. Refrigerator shelf
	11. Refrigerator pocket
	12. Refrigerator case

- Full option Model

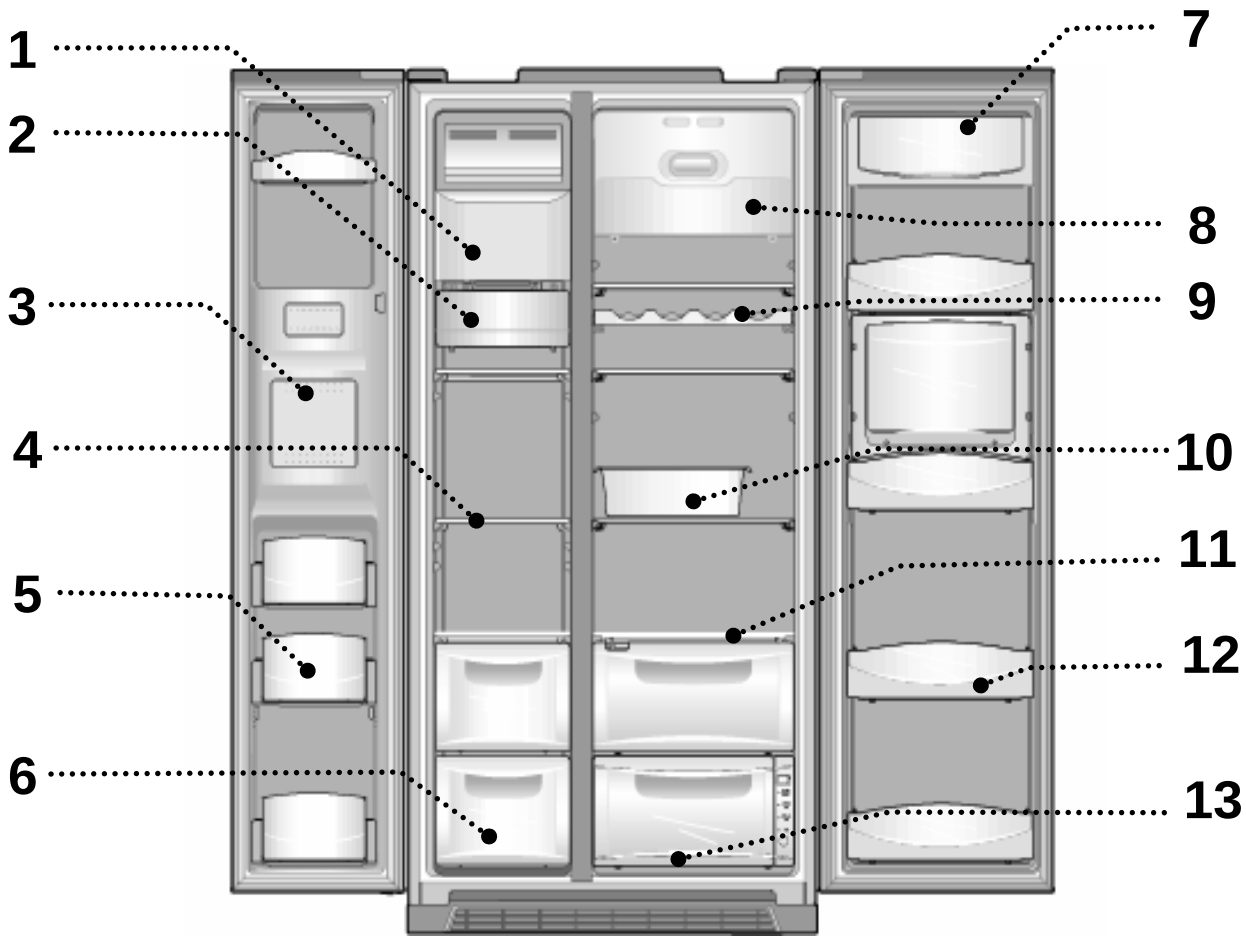

-**Full option Model illustrated.**
-**Features are model dependent.**

Freezer Compartment	Refrigerator Compartment
1. Ice cubes storage case	7. Dairy pocket
2. Freezer light	8. Refrigerator light
3. Water/Ice Dispenser	9. Wine Rack
4. Freezer shelf	10. Movable Egg case
5. Freezer pocket	11. Refrigerator shelf
6. Freezer case	12. Refrigerator pocket
	13. Magic room (option)

2-3. Cold Air Circulation

Freezer Compartment

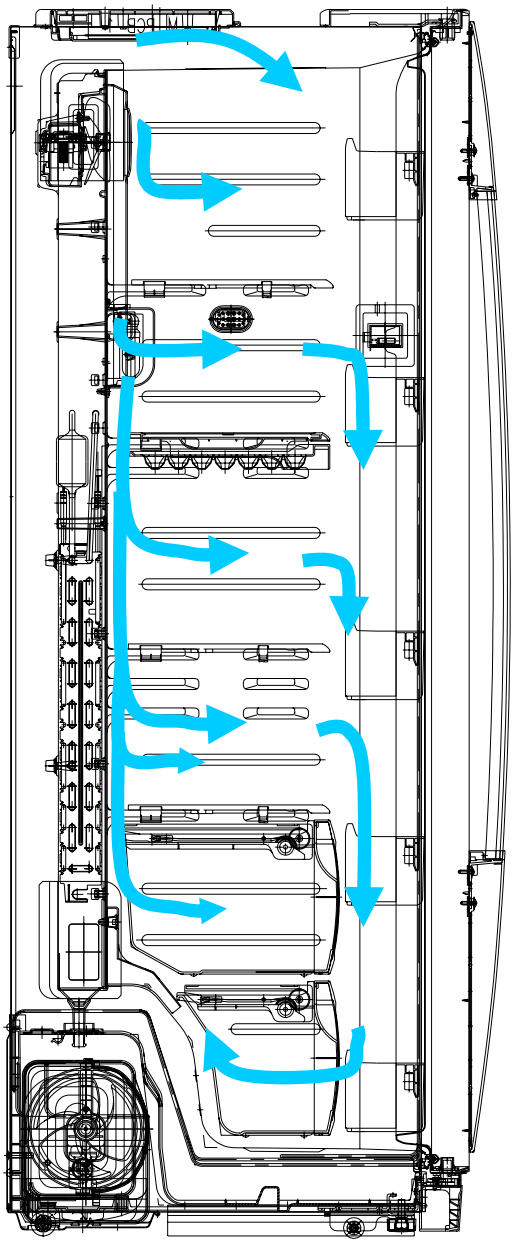

Refrigerator Compartment

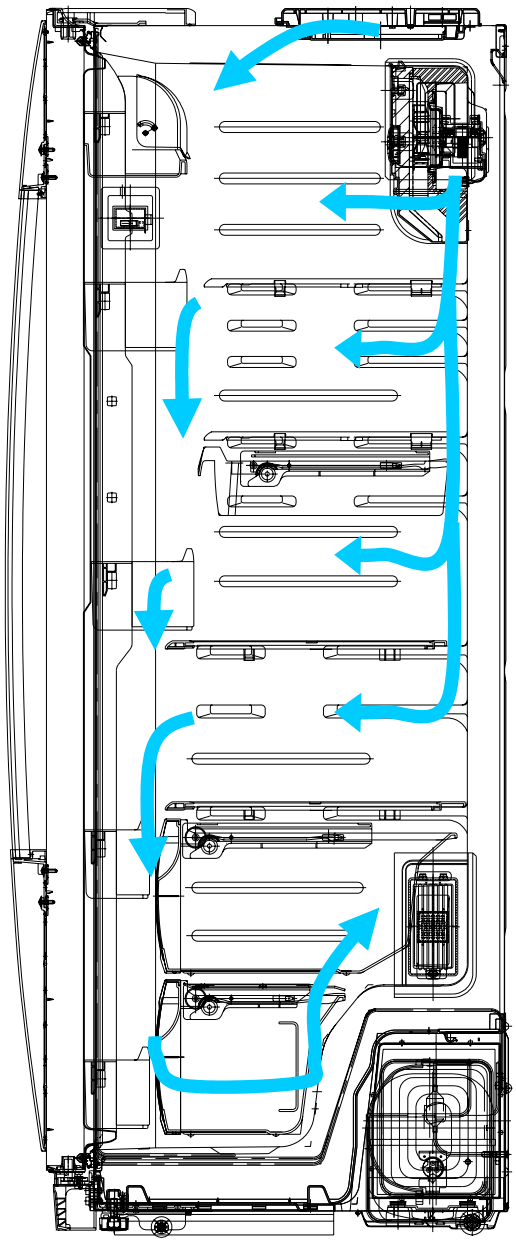

3. SPECIFICATION

3-1. Specification

Item		Specification				
Model Name		FRS(N)-U20IB	FRS(N)-U20DB	FRS(N)-U20EB	FRS(N)-U20FB	FRS(N)-U20GB
ISO Gross Volume (Li)	Total	570 Li	541 Li	525 Li	541Li	536 Li
	Freezer	209 Li	184 Li	178 Li	184 Li	184 Li
	Refrigerator	361 Li	357 Li	337 Li	357 Li	352 Li
ISO Storage Volume (Li)	Total	537 Li	504 Li	504 Li	504 Li	500 Li
	Freezer	198 Li	170 Li	170 Li	170 Li	170 Li
	Refrigerator	339 Li	334 Li	334 Li	334 Li	330 Li
Weight		104kg	113kg	115kg	115kg	117kg
External Dimension (Width x Depth x Height)		903 mm x 734.5mm x 1790 mm				
CYCLE	Evaporator	Fin Type				
	Condenser	Fan Cooling System				
	Dryer	Molecular Sieve XH-9				
	Capillary Tube	IDΦ0.7 × T0.55 × L2200				

Compressor	Description	**HPL30YG-5**	**MK183Q-L2U**	**MK4A5Q-R1U**
	Part Code	395S130R50	3956183D50	3956145250
	Refrigerant (g)	R-134a (190g)	R-134a (190g)	R-600a (76g)
SWITCH P RELAY AS	Description	308NHB, S330	265RHB, S330	
	Part Code	3018129810	3011402100	

※ ( ) is the specification for the model which use R-600a(refrigerant)

Item		Specification (220~240V Models only)	
Model Name		Basic Model	Dispenser Model
DEFORREST	D-Sensor	PBN-43	
	F-Sensor	PBN-38	
	R-Sensor	PBN-43	
HEATER	Defrost Heater	AC220V / 192W	
	Main Duct Heater	AC220V / 7W	
	Louver Heater	AC220V / 8W	
	Dispenser Heater	-	AC220V / 5W
	Water Pipe Heater	-	AC220V / 5W
ELECTRICAL PARTS	Main Fuse (Power cord)	AC250V 15A	
	Fuse Temp (Defrost)	AC250V , 10A , 77℃	
	F-Fan Motor	DC13V / 2050±100 rpm	
	R-Fan Motor	DC13V / 1950±100 rpm	
	Condenser Fan Motor	DC13V / 1100±100 rpm	
	F-Lamp	AC230~240V / 25W (2EA)	
	R-Lamp	AC230~240V / 25W (2EA)	
	Door Switch , F / R	SP201R-7DL / SP201R-7DR (SPF101B-2D / SPF101B-1D)	

4. OPERATION AND FUNCTIONS

4-1. Display

4-1-1. Basic Model

INPUT	CONTROL OBJECT
FRZ.TEMP, REF.TEMP	Inner Control (Lamp-LED)

CONTENTS	REMARKS

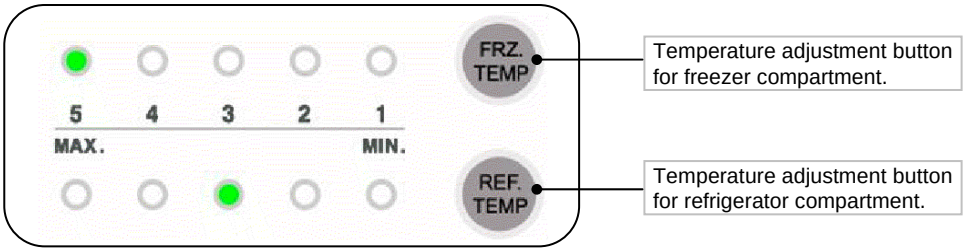

1. “FRZ.TEMP” Button
 1) Temperature control of Freezer compartment
 2) 5 step mode of successive temperature mode.
 3) Initial mode by power input : “3”
 ※Whenever pressing button, setting is repeated in the order of
 Medium(3) → Medium Max(4) → Max(5) → Min(1) → Medium Min(2).

Temperature Chang	Min	Medium Min	Mid	Medium Max	Max
Temp indication	1	2	3	4	5

2. “REF.TEMP” button.
 1) Temperature control of Refrigerator compartment
 2) 5 step mode of successive temperature mode.
 3) Initial mode by power input : “3”
 ※Whenever pressing button, setting is repeated in the order of
 Medium(3) → Medium Max(4) → Max(5) → Min(1) → Medium Min(2).

Temperature Change	Min	Medium Min	Mid	Medium Max	Max
Temp indication	1	2	3	4	5

※ The actual inner temperature varies depending on the food status, as the indicated setting temperature is a target temperature, not actual temperature within refrigerator.
※ Refrigeration function is weak in the initial time.
Please adjust temperature as above after using refrigerator for minimum2~3 days.

4-1-2. Dispenser Model

INPUT	CONTROL OBJECT
Front PCB button FREEZER SET, REFRIGERATOR SET SUPER FREEZER, SUPER REFRIGERATOR RESET FILTER, WATER / ICE, ICE MAKER LOCK ,LOCK	FCP C-LED

CONTENTS	REMARKS



1. Display control

FCP-LED	Control
88 DISPLAY (SET TEMP.)	Initial mode : Freezer & Refrigerator set→ Medium (-19℃/4℃)
SUPER FREEZER,SUPER REFRIGERATOR ICON	Dial
FUZZY, DEODORIZER ICON	Always ON
WATER / CUBED ICE/ CRUSHED ICE ICON	Dial
LOCK ICON	Dial
ICE MAKER LOCK ICON	Dial
FILTER CHANGE ICON	After six month, LED ON

2. “FREEZER SET” Button
   1) Temperature control of freezer compartment
   2) 7 step mode of successive temperature mode.
   3) Initial mode by power input : “Medium(-19℃)”
   ※Whenever pressing button, setting is repeated in the order of
   Medium (-19℃) → Medium Max 1 (-20℃) → Medium Max 2 (-21℃) → Max (-22℃)
   → Min (-16℃) → Medium Min 2 (-17℃) → Medium Min 2 (-18℃).

   Letters are indicated on 88 Display LED

Temperature Change	Min	Medium Min 1	Medium Min 2	Medium	Medium Max 1	Medium Max 2	Max
Temp indication	-16℃	-17℃	-18℃	-19℃	-20℃	-21℃	-22℃

3. “SUPER FREEZER” Button
   When this mode is chosen, the icon (FREEZER QUICK) is ON.

CONTENTS	REMARKS

4. “REFRIGERATOR SET” button.
   1) Temperature control of Refrigerator compartment
   2) 5 step mode of successive temperature mode.
   3) Initial mode by power input : “Medium (4℃)”
   ※Whenever pressing button, setting is repeated in the order of
   Medium (4℃) → Medium Max (3℃) → Max (2℃) → Min (6℃) → Medium Min (5℃).

   Letters are indicated on 88 Display LED

Temperature Change	Min	Medium Min	Mid	Medium Max	Max
Temp indication	6℃	5℃	4℃	3℃	2℃

5. “SUPER REFRIGERATOR” button.
   When this mode is chosen, the icon (REFRIGERATOR QUICK) is ON.

6. “WATER / ICE” button
   1) Select Water / Cubed Ice / Crushed Ice.
   2) Icon lights up to show your selection is on.
   Initial mode by power input : “Water” mode.
   3) The mode of Cubed Ice or Crushed Ice continues for 1 hour and then changes to Water. (Water icon turns ON)

REFERENCE : Please wait for 2-3 seconds in order to take final ice or drops of water when taking out cup from the pressing switches after taking ice or water.

7. “ICE MAKER LOCK” button
   1) Start by pushing “ICE MAKER LOCK” button
   ① “ICE MAKER LOCK” icon is on
   ② “WATER” icon is always on
   2) Stop by pushing “ICE MAKER LOCK” button again
   ① “ICE MAKER LOCK” icon is off
   ② “WATER” icon is on

8. “RESET WATER FILTER” button
   1) The normal (ICON OFF) is on for 6 month after are first power input.
   2) After sic months, icon is ON.
   3) How to reset Filter information
   ① Push the “RESET WATER FILTER” button for 3 seconds after change.

9. “LOCK” button
   1) This button stops operation of different button.
   ① “LOCK” icon is on
   ② Press this button to lock out this case and to keep temperature and function setting.
   2) Push “LOCK” button again for more than a second to stop it.

※ The actual inner temperature varies depending on the food status, as the indicated setting temperature is a target temperature, not actual temperature within refrigerator.
※ Refrigeration function is weak in the initial time.
Please adjust temperature as above after using refrigerator for minimum2~3 days.

4-2. Defrost Mode

INPUT	CONTROL OBJECT
1. Defrosting Cycle	1. Comp 2. F-Fan 3. R-Fan 4. D-Heater

CONTENTS	REMARKS

1. Defrost Mode

Pre-Cool

Pre-Cool
1) Time : 50 minutes
2) Comp , F-fan : ON
R-fan : Control
D-HTR : OFF
3) If F-sensor ≤ -27℃, then Pre-Cool becomes. OFF

Heater Defrosting

Heater Defrosting
1) Comp, F-fan, R-fan : OFF
D-HTR : ON
2) Time limit
30 seconds : Heater is ON regardless of D-sensor temperature right after defrosting start
30 minutes : in case of D1- Error
80 minutes : in normal control state
3) If D-sensor ≥13℃, Heater Defrosting is OFF

Pause

Pause
Time : 7 minutes
Comp, F-fan, R-fan, Heater etc. : OFF

Fan-Delay

Fan-Delay
1) Time : 5 minutes
Comp : ON and F-fan, R-fan, Heater : OFF

2.The defrost mode start with the following conditions

1) Total operation time of comp. becomes : 6,8,10,……. 24 hours.
① Comp. operating rate : more 85%
② Total door open time : 2 minutes
(Any door, F or R open time is over 2 minutes.)
③ Any error mode : R1, F1, D1, F3, RT/S, Door-switch etc.)

2) Defrosting mode starts unconditionally as long as total comp. work time is 24 hours, even if the above conditions 1) are not satisfied.

3) Defrosting mode starts immediately as long as total time of [comp. ON + comp. OFF] is over 60 hours, even if the above 1) and 2) conditions are not satisfied.

3. In providing initial power (or returning power failure)

If D-sensor temp. ≤ 3.5℃, defrosting mode starts .

CONTENTS	REMARKS

4. Flow Chart of Defrosting Start

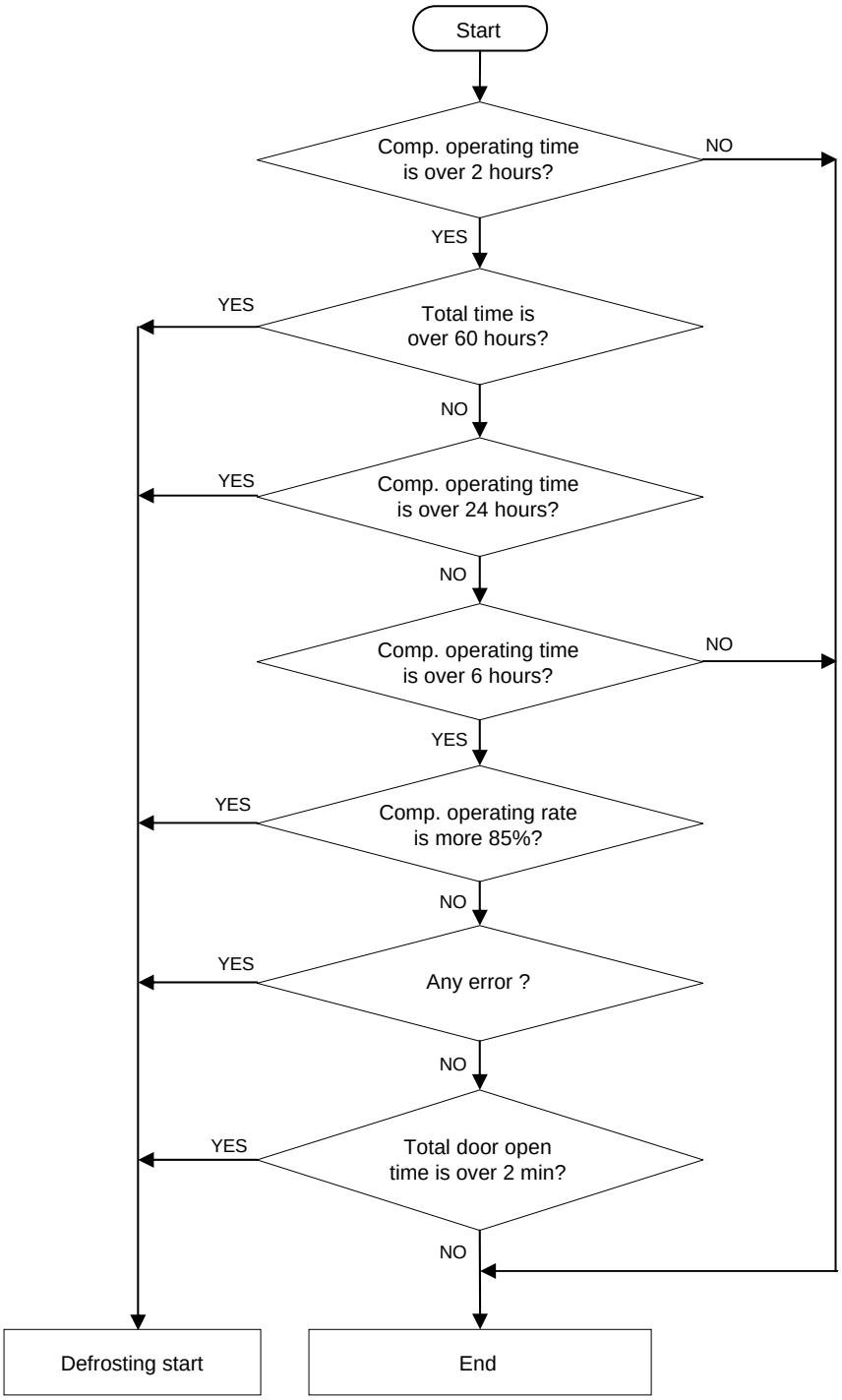

4-3. (Forced Defrosting) Mode

INPUT	CONTROL OBJECT
1. Defrosting Cycle	1. Comp 2. F-Fan 3. R-Fan 4. D-Heater

CONTENTS	REMARKS

1. A/S Defrosting Mode (Heater defrost → Pause → Fan Delay)

Heater Defrosting

Heater Defrosting
1) Comp, F-fan, R-fan : OFF
D-HTR : ON
2) Time limit
30 seconds : Heater is ON regardless of D-sensor temperature right after defrosting start
30 minutes : in case of D1-Error
80 minutes : in normal control state
3) If D-sensor ≥13℃, Heater Defrosting is OFF

Pause

Pause
Time : 7 minutes
Comp, F-fan, R-fan, Heater etc. : OFF

Fan-Delay

Fan-Delay
1) Time : 5 minutes
Comp : ON
F-fan, R-fan, Heater : OFF

2. How to start
1) Push “REF.TEMP” button 5 times while pushing “FRZ.TEMP” button simultaneously. --------- FRS-U20IA
2) In “LOCK” mode, push “REFRIGERATOR SET” button 5 times while pushing “FREEZER SET” button simultaneously. ------ FRS(N)-U20DA

3. How to proceed
1) Delete Pre-cool mode. (Others are same as normal defrosting)
2) Heater is ON regardless of D-sensor temp. at first 30 seconds. (Check of defrosting current)

4-4. Fan Voltage of Control Mode

INPUT	CONTROL OBJECT
1. F-Sensor 2. R-Sensor	1. F-FAN, R-FAN, C-FAN

CONTENTS	REMARKS

1. Fan voltage of control mode

FAN	F-FAN	R-FAN	C-FAN
Voltage	13 V	13 V	13 V

※ Refer to the 5-4. (Fan Function)

4-5. Louver Heater Control

INPUT	CONTROL OBJECT
1. Comp	Louver Heater

CONTENTS	REMARKS
It is linked with comp.	

4-6. Buzzer or Alarm Control

INPUT	CONTROL OBJECT
1. Control (Inner or F-PCB) buttons 2. Door Switch 3. Initial Power Input	Buzzer

CONTENTS	REMARKS
1. Buzzer sounds if any button of Inner Control is pushed. 2. Buzzer sounds 4 times 3 seconds after initial power input. 3. Buzzer sounds for 3 or 1 times in case of A/S forced defrosting and short (pull down) operation or explanation mode. 4. If door is open, buzzer sounds after every 1 minutes for 5 minutes (Door open alarm)	

4-7. Control of Interior Lights (FRS(N)-U20DA)

INPUT	CONTROL OBJECT
1. Refrigerator door switch 2. Freezer door switch 3. Home bar door switch 4. Dispenser switch	Lamp

CONTENTS	REMARKS
1. Control refrigerator compartment lights R-Lights turn ON/OFF by R-door switch ON/OFF (※ For 10 minutes after sensing door open, the lights turn off automatically through door close is not sensed.) 2. Control of freezer compartment lights. F-Light turn ON/OFF by F-door switch ON/OFF (※ For 10 minutes after sensing door open, the lights turn off automatically through door close is not sensed.) 3. R-lights ON/OFF by home bar door switch ON/OFF. (for only model with home bar) R-lights turn ON for 10 minutes after sensing home bar door switch open. 4. Dispenser lamp control (for only model with water/ice dispenser) Dispenser lamp turns ON/OFF by Dispenser switch. Dispenser lamp turns ON for 4 seconds after sensing switch close.	

4-8. Demonstration

4-8-1. Basic Model

INPUT	CONTROL OBJECT
1. FRZ. TEMP 2. Door Switch	Comp F/R-Fan Heater

CONTENTS	REMARKS
1. Start Open and close “Freezer door switch” 5 times while pushing “FRZ. TEMP” button simultaneously. 2. Control 1) All other electrical components are OFF except for F-fan / R-fan 2) Fan Control Door open → Fan ON / Door close → Fan OFF. 3) Display control “FRZ. LED” and “REF. LED” are ON in good order 3. Stop 1) During Demo mode, push “Freezer door switch” open and close 5 times while pushing “FRZ. TEMP” button simultaneously. 2) Power in again	

4-8-2. Dispenser Model

INPUT	CONTROL OBJECT
1. “FREEZER SET, WATER/ICE” Button , Door switch	Comp F/R-Fan Heater

CONTENTS	REMARKS
1. Start Push “ICE/WATER” button 5 times while pushing “FREEZER SET” button simultaneously. 2. Control 1) All other electrical components are OFF except for F-fan / R-fan 2) Fan Control Door OPEN → Fan ON / Door close → Fan OFF. 3. Stop or termination 1) During Demo mode, push “ICE/WATER” button 5 times while pushing “FREEZER SET” button simultaneously. 2) Power in again	

4-9. Compensation of R-sensor ON/OFF Point

INPUT	CONTROL OBJECT
Main PCB	Resistance of R-sensor Mid ON/OFF Point

CONTENTS

Compensation of R-sensor ON/OFF temp. (down)

In case temperature of refrigerator compartment is weak or insufficient,
take the following action.

FRS(N)-U20IA

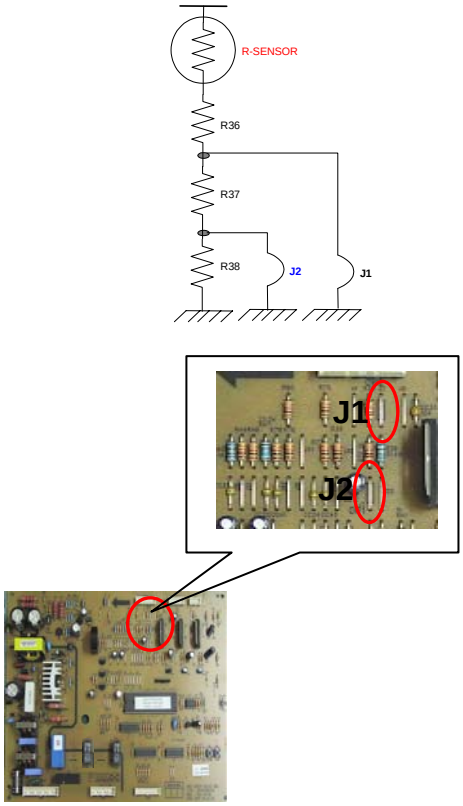

FRS(N)-U20DA

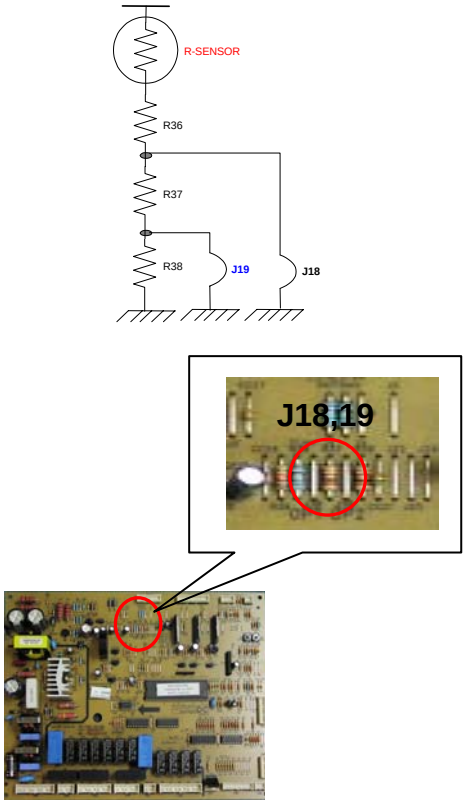

R36 : R-SENSOR standard resistance in normal mode (31.4K)
R37 : In case of weak ref., cut J1 (or J18) to down the standard resistance by 1.5deg(2K)
R38 : In case of weak ref., cut J2 (or J19) to down the standard resistance by 1.5deg(2K)

FRS(N) -U20IA	J1	-	cut	cut
	J2	-	-	cut
	Temperature compensation	0℃	-1.5℃	3℃
FRS(N) -U20DA	J18	-	cut	cut
	J19	-	-	cut
	Temperature compensation	0℃	-1.5℃	3℃

REMARKS

※ Refer to the 5-2.
(Function of each sensor)

4-10. Error Display

4-10-1. Basic Model (LED Display of Inner Control)

INPUT	CONTROL OBJECT
Temperature Control Buttons	Lamp LED of Inner control

CONTENTS

1. How to start
   1) Press “FRZ.TEMP” button 5 times while pressing
      “REF.TEMP” button at the same time.

2. How to stop
   1) Push “FRZ.TEMP” button 1 time.
   2) It stops automatically in 4 minutes from the start.

3. All the error codes are reset if they turn to be normal.

4. Error display

CONTENTS	Display
F-sensor : open (“Lo”), short (“Hi”)	FRZ. LED “5” is on and off
R-sensor : open (“Lo”), short (“Hi”)	FRZ. LED “4” is on and off
RT-sensor : open (“Lo”), short (“Hi”)	FRZ. LED “3” is on and off
D-sensor : open (“Lo”), short (“Hi”)	FRZ. LED “2” is on and off
R-Door Switch : defective	FRZ. LED “1” is on and off
F-Door Switch : defective	REF. LED “5” is on and off
Cycle : defective	REF. LED “3” is on and off
Return after defrosting : defective	REF. LED “2” is on and off
EEPROM : defective	REF. LED “1” is on and off
Full Down mode	REF. LED “1” is on
Forced defrost mode for A/S	REF. LED “1” is on and off (twice)

(Full down mode and forced defrost mode are displayed while pressing
“REF.TEMP” button at the error display mode)

REMARKS

CONTENTS	REMARKS

5. Control way of Errors (if any)

1) “F-sensor” error
Cause : F-sensor open or short
Control : Condition of ambient temperature
How to reset : If F-sensor is normal, the error is terminal temperature.

RT-S	~ 9℃	~ 15℃	~ 21℃	~ 31℃	~ 41℃	Over 41℃
ON/OFF (min)	14 / 50	16 / 41	27 / 45	26 / 22	35 / 20	35 / 20

2) “R-sensor” error
Cause : R-sensor open or short
Control : Condition of ambient temperature
How to reset : If R-sensor is normal, the error is terminal temperature.

RT-S	~ 9℃	~ 15℃	~ 21℃	~ 31℃	~ 41℃	Over 41℃
ON/OFF (min)	OFF	3 / 50	2 / 10	3 / 7	4 / 6	6 / 4

3) “RT-sensor” error
Cause : RT-sensor open or short (full down)
Control : Normal operation, deletion of control by RT-sensor
If RT-sensor is normal, the error is terminated automatically.

4) “D-sensor” error
Cause : D-sensor open or short (full down)
Control : Time limit (30 min) of defrosting return
If D-sensor is normal, the error is terminated automatically.

5) “Door” error
Cause : in case it senses that door is open for more than 1 hour.
Control : Deletion of function related door switch sensing
If door switch (open & close) is sensed, the error is terminated automatically.

6) “Cycle” error
Cause : in case comp. works for over 3 hours when D-sensor temp. is over -5℃
Control : normal operation
When D-sensor temp. is below -5℃ in comp. off it is terminated.

7) “Return after defrosting” error
Cause : in case defrosting return is done by time limit of 80 min
Control : Deletion of Pre-cool mode in defrosting mode
If defrosting return is done by D-sensor, it is terminated.

8) A/S forced defrosting mode
Push “REFRIGERATOR SET” button 5 times while pushing “FREEZER SET” button Simultaneously.
Control : A/S forced defrosting control (Pre-cool is deleted)
If D-sensor temp. is over 10℃, the mode is terminated automatically.
When all error code is normal, the Refrigerator reset

4-10-2. Dispenser Model (CLED Display of Front PCB)

INPUT	CONTROL OBJECT
Temperature Control Buttons	88 Display CLED

CONTENTS	REMARKS

1. How to start
   1) Under “LOCK” mode, press “SUPER FREEZER” button 5 times while pressing “FREEZER SET” button at the same time.
   2) The front CLED displays as the right diagram shows
   ([Ex.] Time Display of 0003 signifies 3 minutes of power on time.)
   3) Press “FREEZER SET” button and the following value is displayed successively.
   ① Time
   ② F-Sensor temperature
   ③ D-Sensor temperature
   ④ R-Sensor temperature
   ⑤ RT-Sensor temperature
   ⑥ P Factor display (Refer to water supply mode of automatic icemaker)
   ⑦ Filter remaining time until change (First check ; 4,320Hr)
   Refer to Filter Information Reset of CLED of front control panel.
   4) Error is displayed only if there is any ; it is skipped if no error.

2. How to stop
   1) Push “LOCK” button 1 time.
   2) It stops automatically in 4 minutes from the start.

3. All the error Codes are reset if they turn to be normal.

4. Error code

ERROR CODE	CONTENTS
F1	F-sensor : disconnection (“Lo”), short (“Hi”)
r1	R-sensor : disconnection (“Lo”), short (“Hi”)
rt	RT-sensor : disconnection (“Lo”), short (“Hi”)
d1	D-sensor : disconnection (“Lo”), short (“Hi”)
dr	R-Door Switch : defective
dF	F-Door Switch : defective
dH	Home bar Door Switch : defective
EI	I-sensor : disconnection (“Lo”), short (“Hi”)
EF	Flow sensor : defective
Et	Horizontal switch : error
Eg	Water supply : error
ES	Micro switch : error
EA	Drop the ice while Et
Eu	Full ice switch : error
C1	Cycle : abnormal or defective
F3	Return after defrosting : abnormal or defective
Co	Display Full Down mode
D2	Display forced defrost mode for A/S

CONTENTS	REMARKS

5. Control way of Error (if any)

1) “F1” error

Cause : F-sensor disconnection or short

Check point : Measure the resistance between both terminals after separating CN8 (or CN15) of the Main PCB. (Refer to the 5-2.)

If F-sensor is disconnected or shorted , change the F-sensor in the freezer compartment.

How to reset : If F-sensor is normal, the error is terminal temperature.

2) “R1” error

Cause : R-sensor disconnection or short

Check point : Measure the resistance between both terminals after separating CN7 (or CN14) of the Main PCB. (Refer to the 5-2.)

If R-sensor is disconnected or shorted , change the F-sensor in the refrigerator compartment.

How to reset : If R-sensor is normal, the error is terminal temperature.

3) “rt” error

Cause : RT-sensor disconnection or short (full down)

Check point : Measure the voltage of “A” part on the Main PCB.

If the voltage is 0.5V~4.5V, it is normal.

If the voltage is 0V (short) or 5V (disconnected), change the RT-sensor on the Main PCB

How to reset : If RT-sensor is normal, the error is terminated automatically.

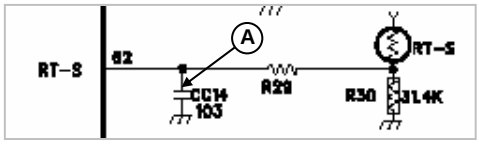

< Basic Model >

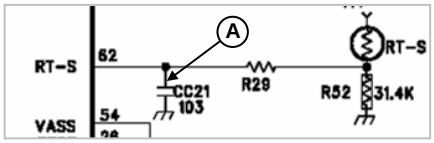

< Dispenser Model >

4) “d1” error

Cause : D-sensor disconnection or short (full down)

Check point : Measure the resistance between both terminals after separating CN8 (or CN15) of the Main PCB. (Refer to the 5-2.)

If D-sensor is disconnected or shorted , change the D-sensor on the evaporator.

How to reset : If D-sensor is normal, the error is terminated automatically.

5) Door error (“dF” “dR” “dH” on display)

Cause : in case it senses that door is open for more than 1 hour.

Check point : F/R door is opened or not.

6) “C1” error

Cause : in case comp. works for over 3 hours when D-sensor temp. is over -5℃

Check point : Refrigerant leakage.

7) “F3” error

Cause : in case defrosting return is done by time limit of 80 min

Check point : Measure the resistance between both terminals of the defrost heater. (Assembled with evaporator)

If the resistance is ∞Ω (disconnected) or 0Ω (short) change the

8) “d2” mode (A/S forced defrosting mode)

Push “REFRIGERATOR SET” button 5 times while pushing “FREEZER SET” button simultaneously.

Control : A/S forced defrosting control (Pre-cool is deleted)

If D-sensor temp. is over 10℃, the mode is terminated automatically.

Refer to the 4-3. .

CONTENTS	REMARKS
9) “EI”ERROR Cause : I-SENSOR disconnection / short Check point : Measure the resistance between both terminals after separating CN11 of the Main PCB. (Refer to the 5-2.) If F-sensor is disconnected or shorted , change the I-sensor in the automatic ice maker. 10) “EF” ERROR Cause : When Flow-sensor ERROR (There is no Pulse during some time) The number of pulse signal is below 10 by 1 sec during water supply. Check point : Water supply line 11) “Eg” ERROR Cause : I-sensor temp (5min after water supply) doesn’t go up. Check the I-sensor or water supply line. 12) “ES” error (MICRO switch error) Cause : When it senses 1min continuously Check the MICRO switch of the dispenser. 13) “Ea” error Cause : Malfunction of ice drop motor. Check the motor by pushing test switch. 14) “Eu” error Cause : Switch (which senses if the ice is full or not) is in error. Control : When dropping the ice, the motor just rotates 90 degree. Termination : When the switch is in normal. 15)“EA“ ERROR Cause : When sensing Ice dropping by time 3 times in level sensor SW Error. Control : Stop of Ice Maker Termination : With normal level switch. Re-input of power or push if icemaker test switch. 16)“Et” ERROR Cause : Level switch error (No pulse is sensed for some time) Control : By time (Supply mode is skipped) Termination : Normal condition. * When all ERROR CODE is normal, the Refrigerator reset	

4-11. Summary of Function

4-11-1. Basic Model (Inner Control)

INPUT	CONTROL OBJECT
Each button	Resistance of R-sensor Mid ON/OFF Point

CONTENTS	REMARKS

Element A/S Function

Forced Defrosting	“FRZ.TEMP” + “REF.TEMP” 5 times
Pull Down	“REF.TEMP”+ “FRZ.DOOR” OPEN/CLOSE 5 times
Demo function	“FRZ.TEMP”+ “FRZ.DOOR” OPEN/CLOSE 5 times
Error display	“REF.TEMP”+ “FRZ.TEMP” 5 times

4-11-2. Dispenser Model (Front PCB)

INPUT	CONTROL OBJECT
Each button	Resistance of R-sensor Mid ON/OFF Point

CONTENTS	REMARKS

1. All the modes are started “LOCK” mode (except “FILTER RESET” mode)

2. Element A/S Function

Forced Defrosting	“FREEZER SET” + “REFRIGERATOR SET” 5 times
Reset water filter	Push “RESET WATER FILTER” for 3 seconds
Demo function	“REFRIGERATOR SET” + “WATER/ICE” 5 times
Pull Down	“REFRIGERATOR SET”+ “FREEZER SET”+ “WATER/ICE”5 times
Error display	“FREEZER SET”+ “SUPER FREEZER” 5 times
EEPROM clear	“WATER/ICE”+ “RESET WATER FILTER” 5times
Ice maker test	“WATER/ICE” + “ICE MAKER LOCK” 5 times

4-12. Back up Function (Basic Model)

INPUT	CONTROL OBJECT
None	1. F-FAN, R-FAN, C-FAN

CONTENTS	REMARKS
1. Filter Exchange Information : Record as a real-time from the point of power input 2. P Factor (Information about Ice Maker)	

4-13. Automatic Icemaker (Dispenser Model)

INPUT	CONTROL OBJECT
Full ice sensing switch Ice Maker Lock Sensors	Ice separating motor

CONTENTS	REMARKS

1. Flow of ice making

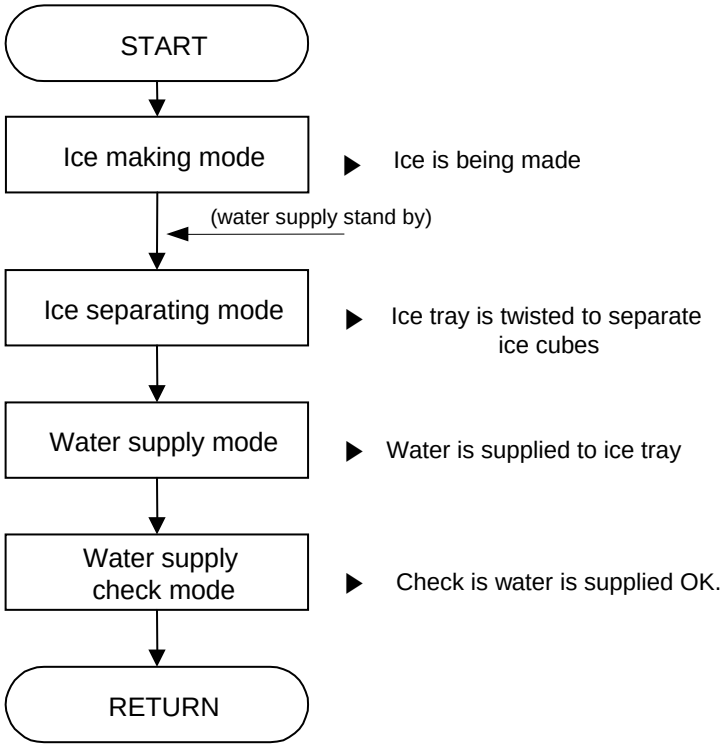

1) Press TEST switch under the Icemaker for more than 1 second and test starts.
   * Test mode starts from ice separating mode.
   * In case test switch has an error of short, test is done only once.

CONTENTS	REMARKS

2) With the initial power input, Ice tray turns to be horizontal and ice making mode starts.

3) Control of water hose heater

* Heater is always ON if RT-sensor has an error or RT is below 15 degree.
* Heater is always ON for 60 minutes (max. Limit time) if Flow-sensor has an error

4) Water supply stand-by

Condition : if ice is sensed full

Operation : proceeds to Ice making mode (Ice separating and water supply Modes stop)

5) Crusher Function

It stops operation when freezer door is open

It operates if freezer door is closed.

2 Ice making mode

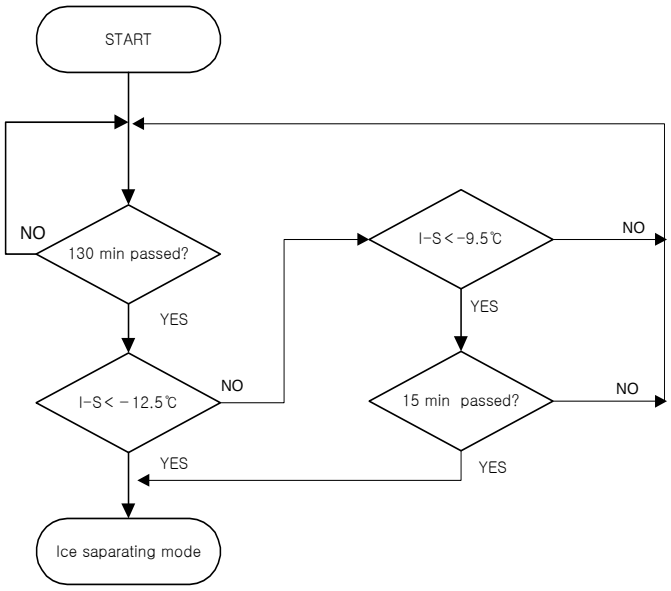

1) Ice making stops if ice-sensor is below -12.5℃ after 130 minutes.

2) Ice making also stops if ice-sensor is below -9.5℃ for 15 minutes, though ice-sensor is not below -12.5℃ after 130 minutes.

3) In case of ice sensor, ice making stops after 4.8 hours.

CONTENTS	REMARKS

3. Ice separating (drop) mode

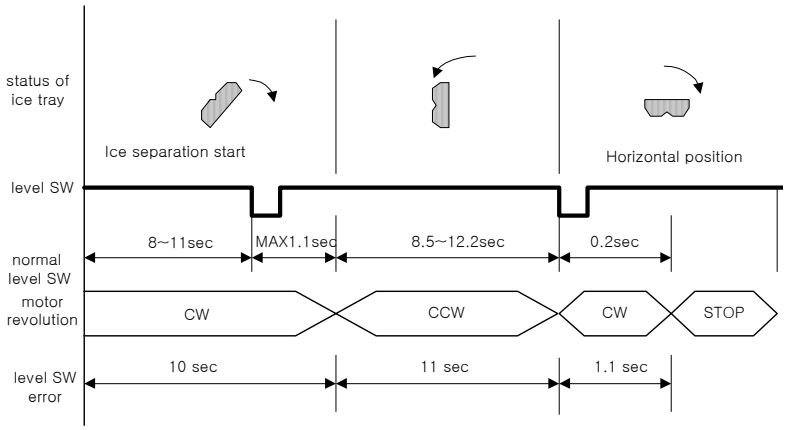

1) Time of each zone used to verify level switch error
2) The rotation of motor is sensed at each zone
3) In case of level switch error, ice separation is done by time.
4) If ice separating motor has error, the mode stop.

4. Water supply mode

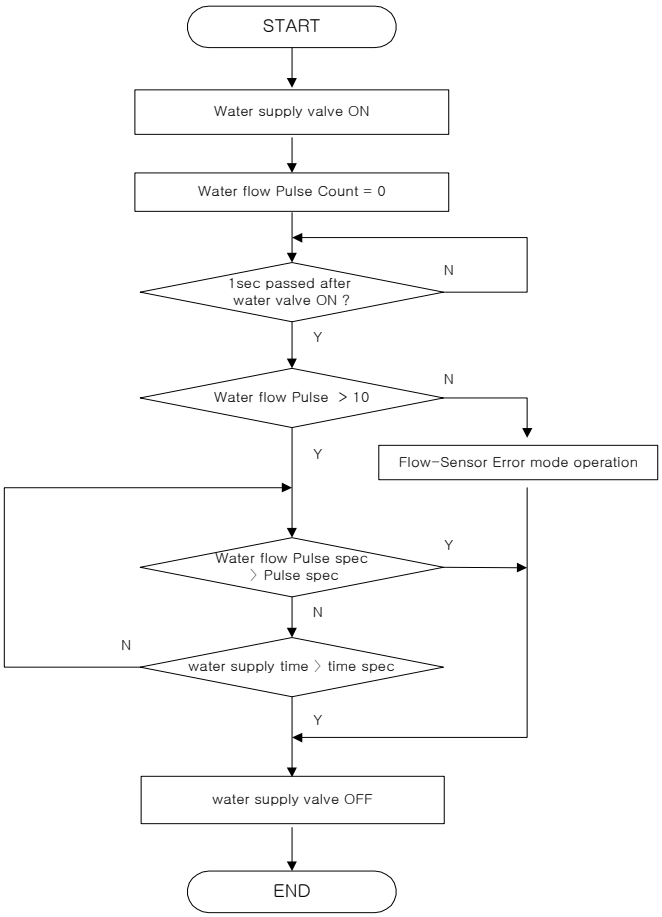

CONTENTS	REMARKS
1) Water supply valve is open when water supply mode starts after separation of ices. 2) Water is supplied by time in case sensor has error. 3) Factor valve is variable which can be useful in AS action ① Water flow pulse is set to 238 if flow sensor is in normal condition. (If water is supplied by time, maximum water supply time 165 seconds) ② In case water flow sensor has error, water time is 5.5 seconds. 5. Water supply check mode 5 minutes after water supply the status can be checked by RT-sensor and increase of temp. Ice sensor.	

RT-S	9℃ ↓	~15℃	~21℃	~31℃	~41℃	41℃ ↑
I-S	-10℃	-9℃	-8℃	-7℃	-6℃	-5℃

4-14. Dispenser Control Function

INPUT	CONTROL OBJECT
Dispenser switch WATER/ICE Button ICE MAKER LOCK Button Freezer Door Switch	Dispenser Lamp Crusher Motor Flap Solenoid Crusher Solenoid Dispenser Water Valve

CONTENTS	REMARKS
1) Initial mode : water (Mode change : Water → Cubed ice → Crushed ice) - Selected icon LED turns ON and others are OFF. 2) ICE MAKER LOCK Button Icemaker Lock function and its ICON Turn ON/OFF by pressing the button. 3) Display ① Water ICON turns ON as default mode ② The ICON of each mode turns ON by pressing its button. (If display switch makes error during operation of a mode, its ICON turns OFF) ③ When Icemaker Lock ICON turns ON. - ICE MAKER LOCK ICON turns ON - If it is in the mode of Cubed Ice or Crushed Ice, the mode is changed to Water and Water ICON turns ON - If there is no button input for 1 hour after selecting Cubed Ice or Crushed Ice the mode turns to Water (default)	

CONTENTS	REMARKS

4) Control Flow & Timing Chart

① Crushed Ice

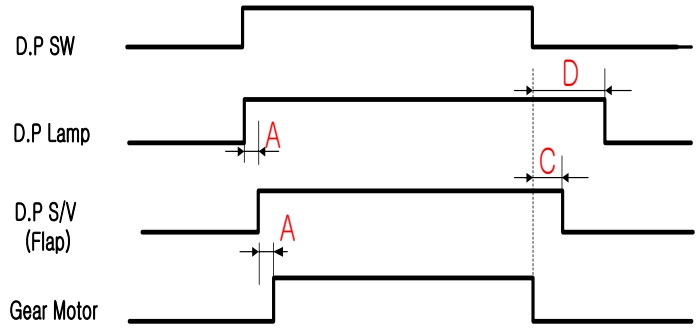

② Cubed Ice

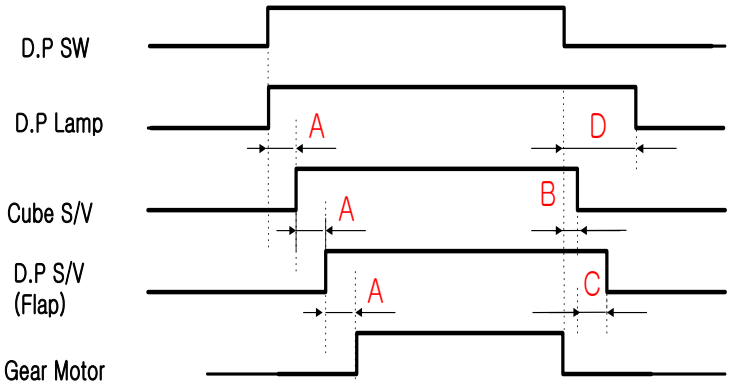

③ Water

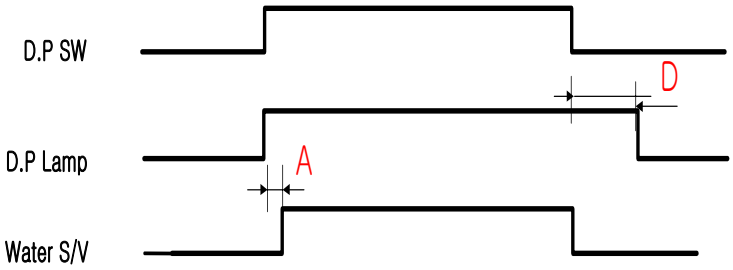

Delay time : A = 500ms, B = 500ms, C = 2.0s, D = 5.0s

5. CIRCUIT OPERATION

5-1. Power Circuit Diagram

- Basic Model

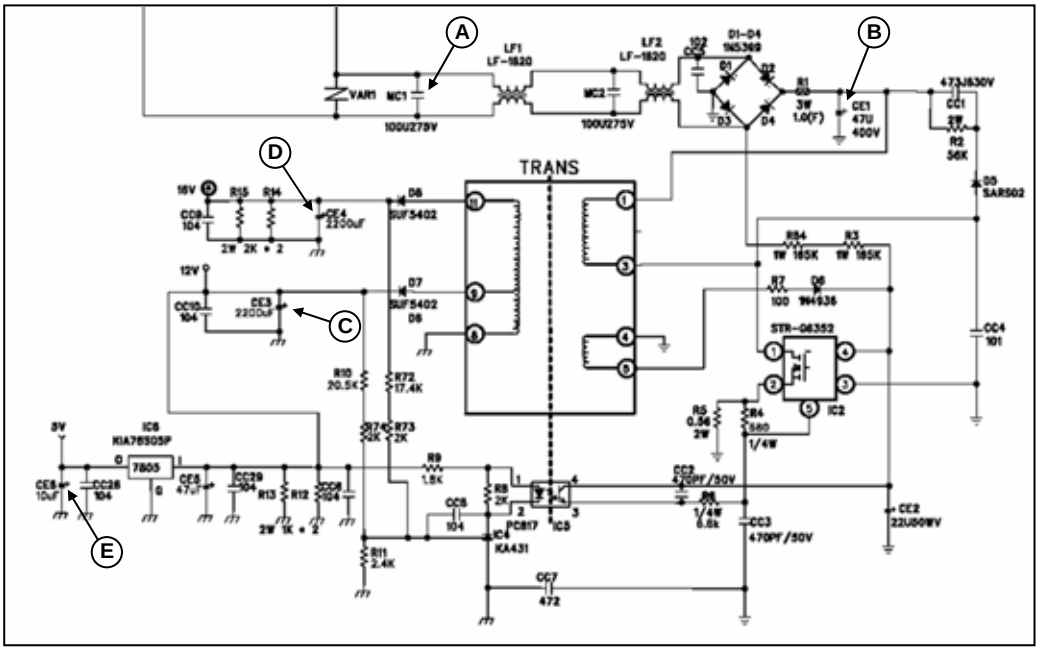

- Dispenser Model

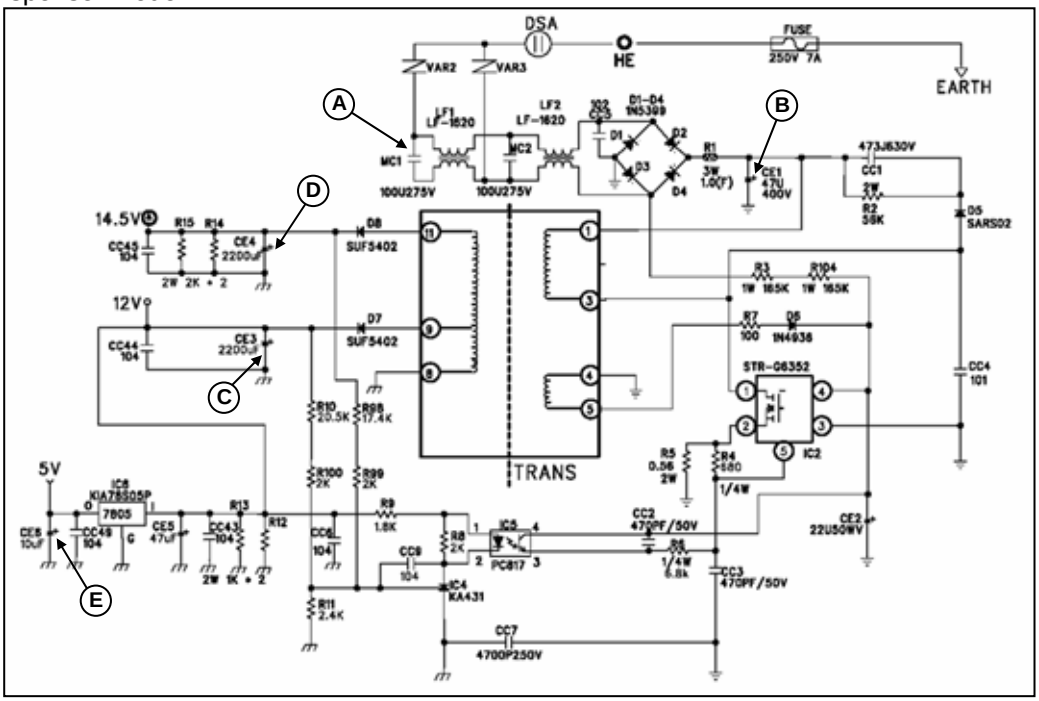

※ Voltage of every part

Parts	A	B	C	D	E
	MC1	CE1	CE3	CE4	CE6
Voltage	230Vdc	310Vac	12Vdc	14.5Vdc	5Vdc

※ **Caution :** Since high voltage (DC310V) is maintained at the power terminal, please take a measure after more than 3minutes have passed after removing power cords in the abnormal operation of a circuit.

5-2. Function of Each Sensor

- Dispenser Model

CONTENTS	REMARKS

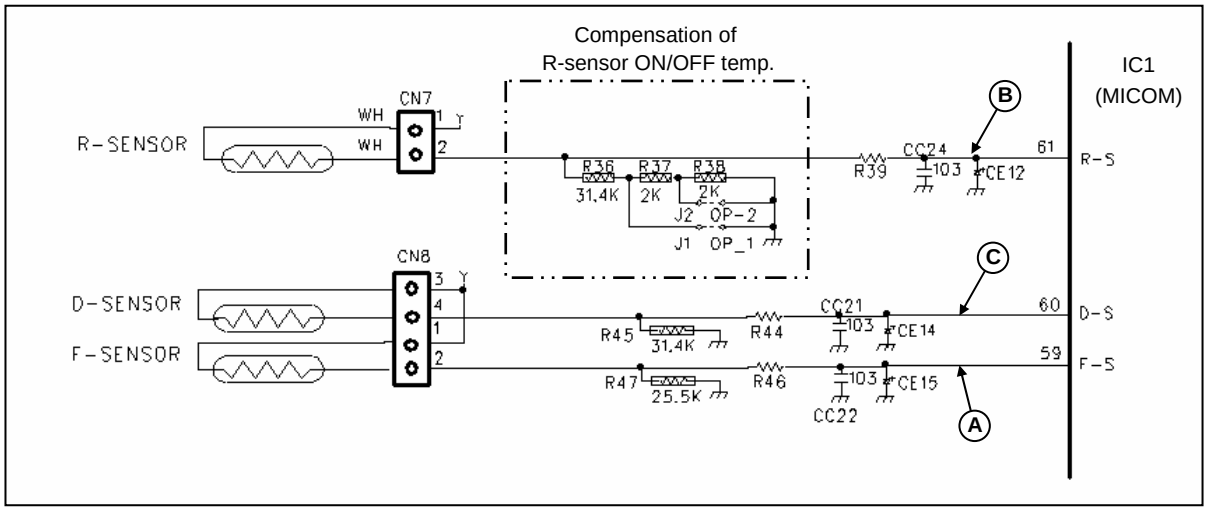

[F-sensor]

1) It senses the temperature of freezer compartment and control Comp., F-fan ON/OFF

2) How it works;

Working Point	Low ON	Mid OFF	High OFF
Working Temp.	-11℃	-16℃	-19℃
Resistance	≒9.32kΩ	≒15.19kΩ	≒15.58kΩ
Sensing Voltage	≒3.24V	≒2.93V	≒2.73V

[R-sensor]

1) It senses the temperature of refrigerator compartment and control R-fan ON/OFF

2) How it works;

Working Point	Low ON	Mid OFF	High OFF
Working Temp.	7.7℃	5.2℃	3.2℃
Resistance	≒23.33kΩ	≒24.05kΩ	≒24.76kΩ
Sensing Voltage	≒2.96V	≒2.83V	≒2.72V

[D-sensor]

1) It senses return point of defrosting heater.

2) How it works;

Working Point	Return point of defrosting heater
Working Temp.	13℃
Resistance	≒22.56kΩ
Sensing Voltage	≒3.08V

* In case temperature of refrigerator compartment is weak or insufficient though comp. and R-fan operate in normal way;
  1) Cut J1 on the M-PCB, then temp. is lowered 1.5℃ than [Mid OFF point]
  2) Cut J1 and J2 on the M-PCB, then the temp, is lowered 3℃.

- Dispenser Model

CONTENTS	REMARKS

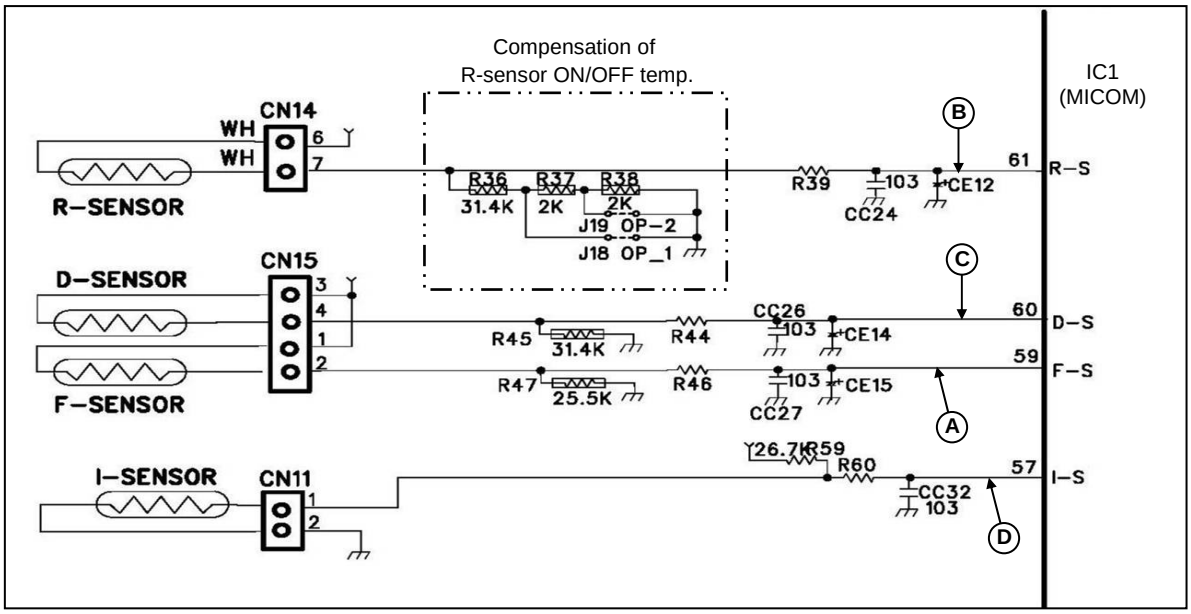

[F-sensor (A)]

1) It senses the temperature of freezer compartment and control Comp., F-fan ON/OFF
2) How it works;

Working Point	Low ON	Mid OFF	High OFF
Working Temp.	-11℃	-16℃	-19℃
Resistance	≒9.32kΩ	≒15.19kΩ	≒15.58kΩ
Sensing Voltage	≒3.24V	≒2.93V	≒2.73V

[R-sensor (B)]

1) It senses the temperature of refrigerator compartment and control R-fan ON/OFF
2) How it works;

Working Point	Low ON	Mid OFF	High OFF
Working Temp.	7.7℃	5.2℃	3.2℃
Resistance	≒23.33kΩ	≒24.05kΩ	≒24.76kΩ
Sensing Voltage	≒2.96V	≒2.83V	≒2.72V

[D-sensor (C)]

1) It senses return point of defrosting heater.
2) How it works;

Working Point	Return point of defrosting heater
Working Temp.	13℃
Resistance	≒22.56kΩ
Sensing Voltage	≒3.08V

* In case temperature of refrigerator compartment is weak or insufficient,
though comp. and R-fan operate in normal way;
1) Cut J18 on the M-PCB, then temp. is lowered 1.5℃ than [Mid OFF point]
2) Cut J18 and J19 on the M-PCB, then the temp, is lowered 3 ℃

5-3. Relay Function

- Basic Model

CONTENTS	REMARKS

1. Circuit Diagram

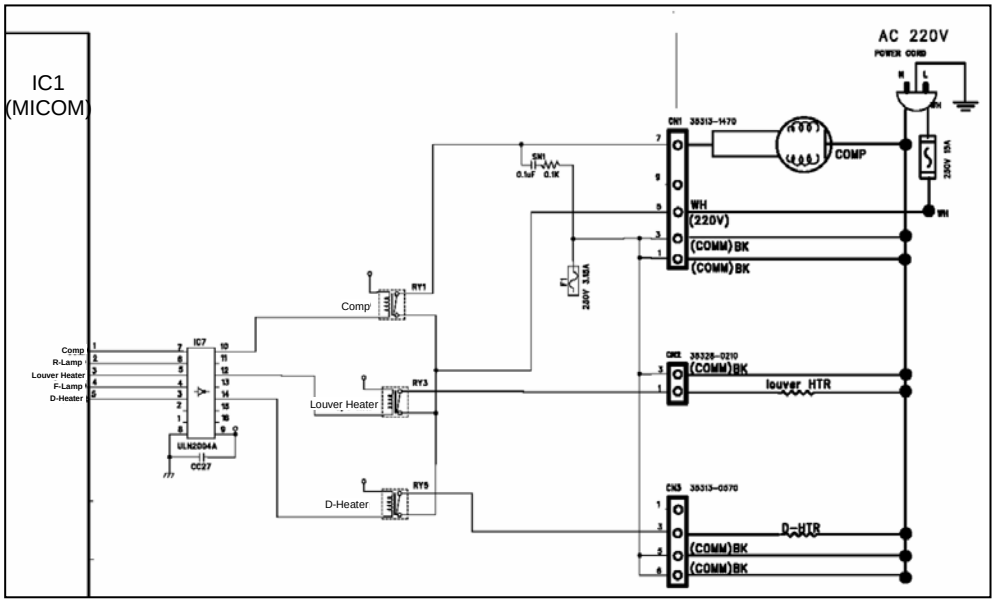

2. How it works;

Control	Control Mode Method	ON Condition			OFF Condition		
		MICOM Port	IC ULN2004 Output pin		MICOM Port	IC ULN2004 Output pin	
Comp	Relay 1	#1≒5.0V	IC7	#10≒0.7V	#1≒0V	IC7	#10≒12V
Louver Heater	Relay 3	#3≒5.0V		#12≒0.7V	#3≒0V		#12≒12V
D-Heater	Relay 5	#5≒5.0V		#14≒0.7V	#5≒0V		#14≒12V

- Dispenser Model

CONTENTS	REMARKS

1. Circuit Diagram

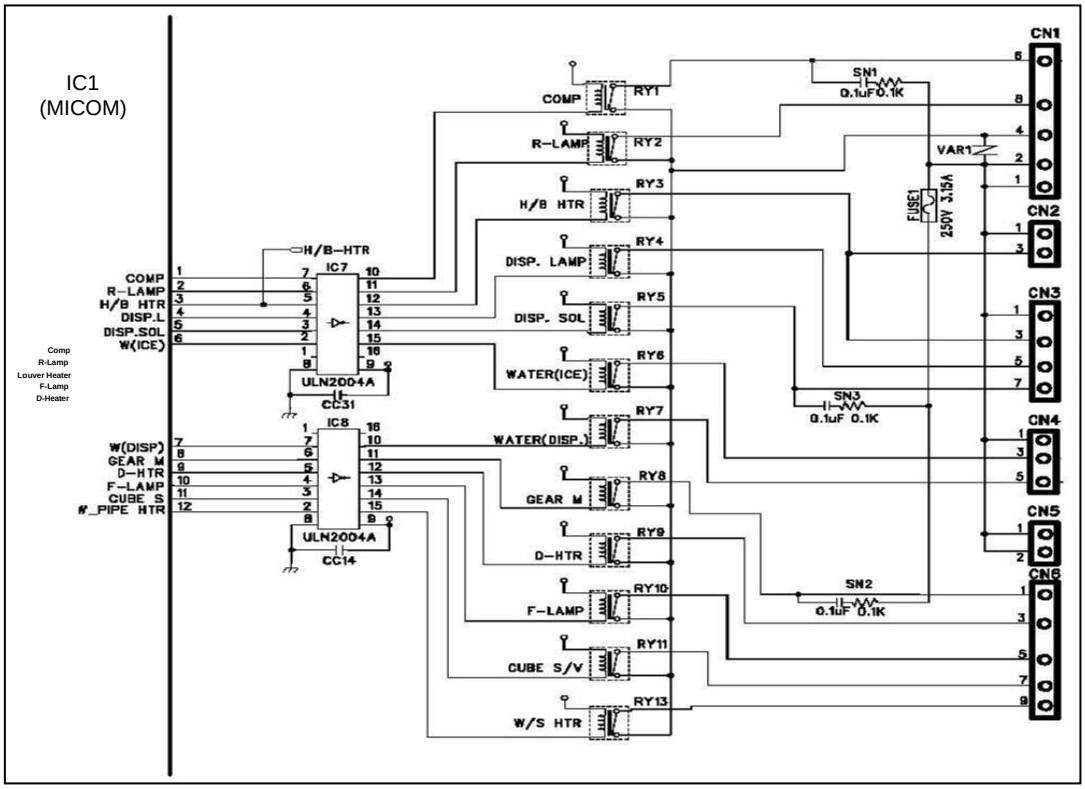

2. How it works;

Control	Control Mode Method	ON Condition			OFF Condition		
		MICOM Port	IC ULN2004 Output pin		MICOM Port	IC ULN2004 Output pin	
Comp	Relay 1	#1≒5.0V	IC7	#10≒0.7V	#1≒0V	IC7	#10≒12V
R-Lamp	Relay 2	#2≒5.0V		#11≒0.7V	#2≒0V		#11≒12V
H/B Heater	Relay 3	#3≒5.0V		#12≒0.7V	#3≒0V		#12≒12V
Dispenser-Lamp	Relay 4	#4≒5.0V		#13≒0.7V	#4≒0V		#13≒12V
Dispenser-Solenoid	Relay 5	#5≒5.0V		#14≒0.7V	#5≒0V		#14≒12V
Water (Ice)	Relay 6	#6≒5.0V		#15≒0.7V	#6≒0V		#15≒12V
Water (Dispenser)	Relay 7	#7≒5.0V	IC8	#10≒0.7V	#7≒0V	IC8	#10≒12V
Geared-Motor	Relay 8	#8≒5.0V		#11≒0.7V	#8≒0V		#11≒12V
D-Heater	Relay 9	#9≒5.0V		#12≒0.7V	#9≒0V		#12≒12V
F-Lamp	Relay 10	#10≒5.0V		#13≒0.7V	#10≒0V		#13≒12V
Cube-Solenoid	Relay 11	#11≒5.0V		#14≒0.7V	#11≒0V		#14≒12V
Water Pipe Heater	Relay 12	#12≒5.0V		#15≒0.7V	#12≒0V		#15≒12V

5-4. Fan Function

1. Circuit Diagram

- Basic Model

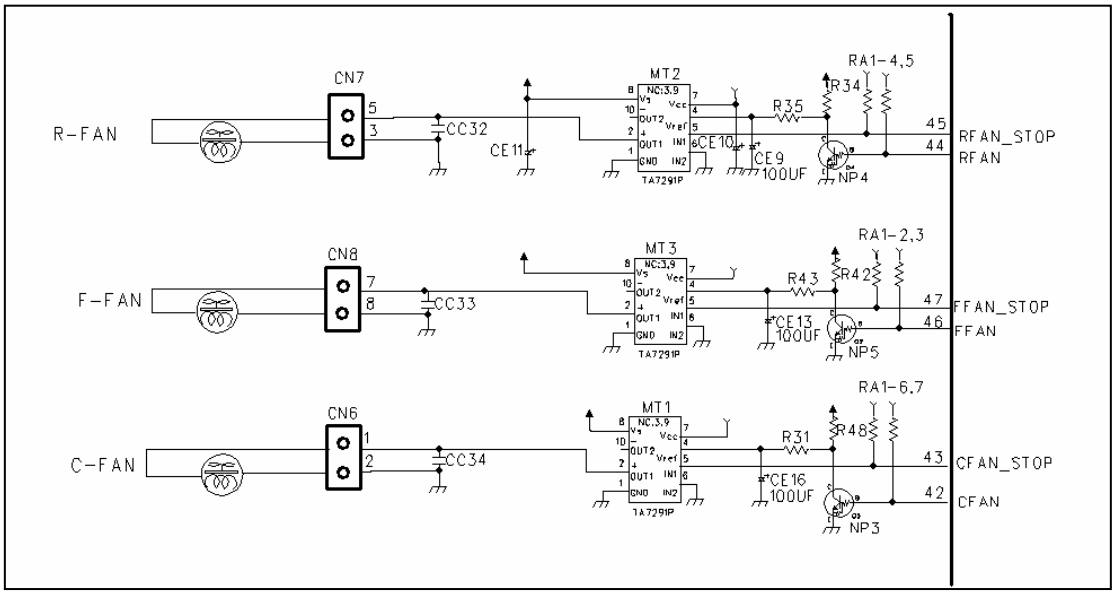

- Dispenser Model

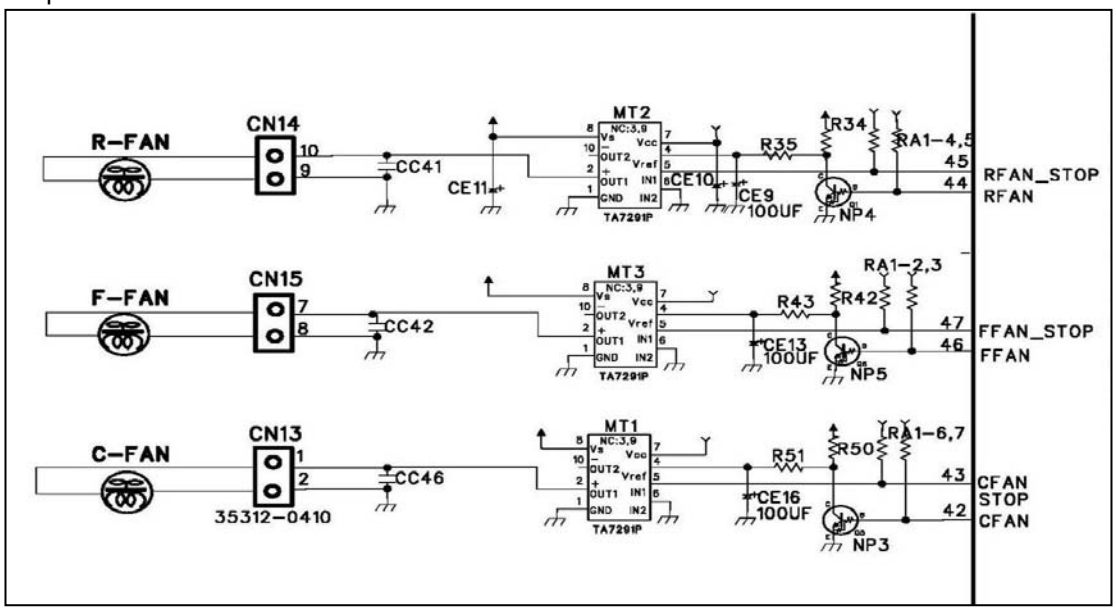

2. Explanation for the operation

* TA7291P is the drive IC for the only DC motor, and used for control of the fan motor
* One input and output is used for the control of the fan motor

Input	Output	Remark
Motor IC No.5 Pin (R:MT2/F:MT3/C:MT1)	Motor IC No.2 Pin (R:MT2/F:MT3/C:MT1)	
High	High	13V
Low	Low	Stop

- Vref is the reference voltage for the adjustment of the output voltage by the voltage distribution of Vs (Maximum output voltage), and the output voltage applied to the fan is determined by the PWM control using the software.

6. DIAGRAM

6-1. Wiring Diagram

- Basic Model

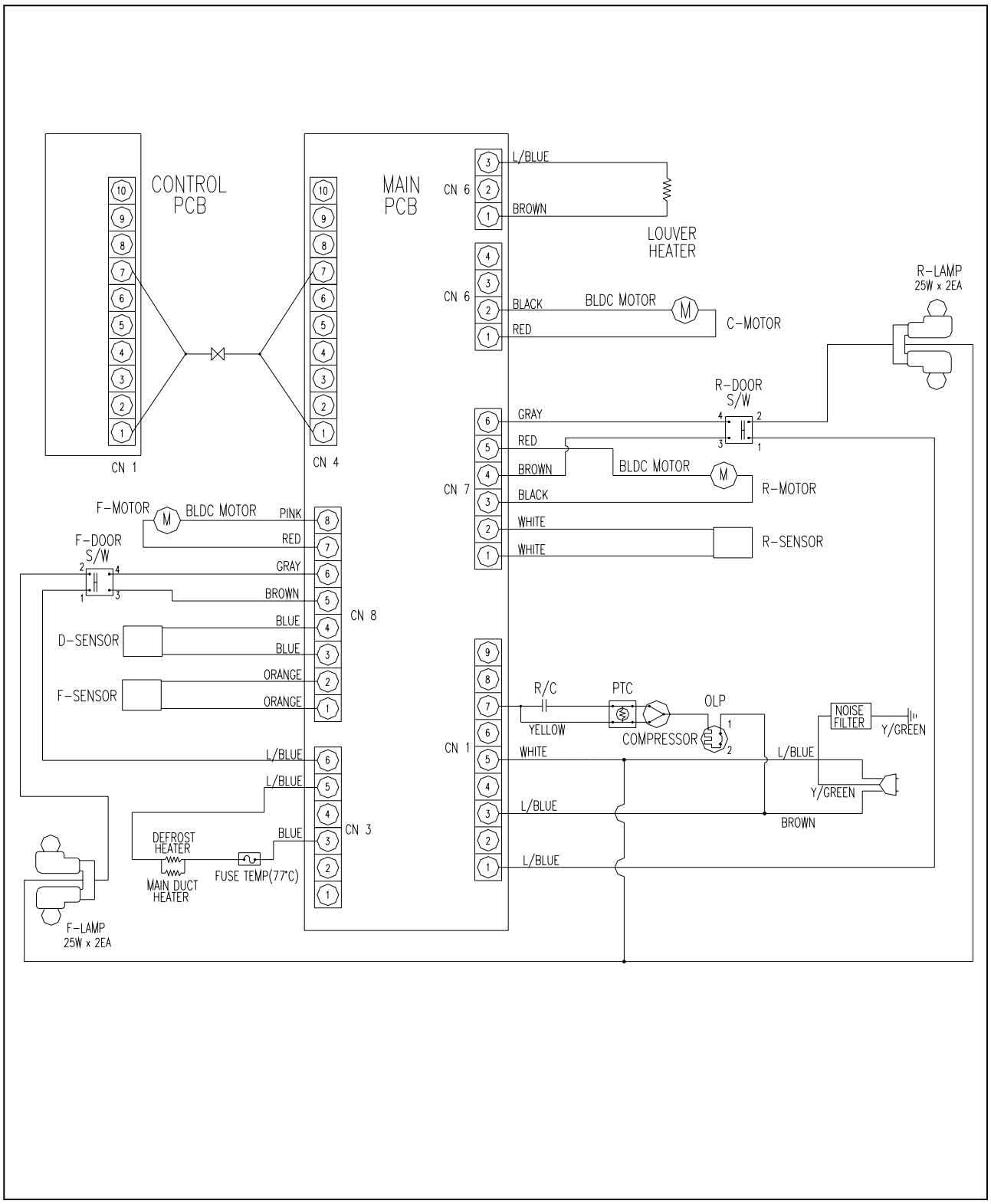

- Dispenser Model

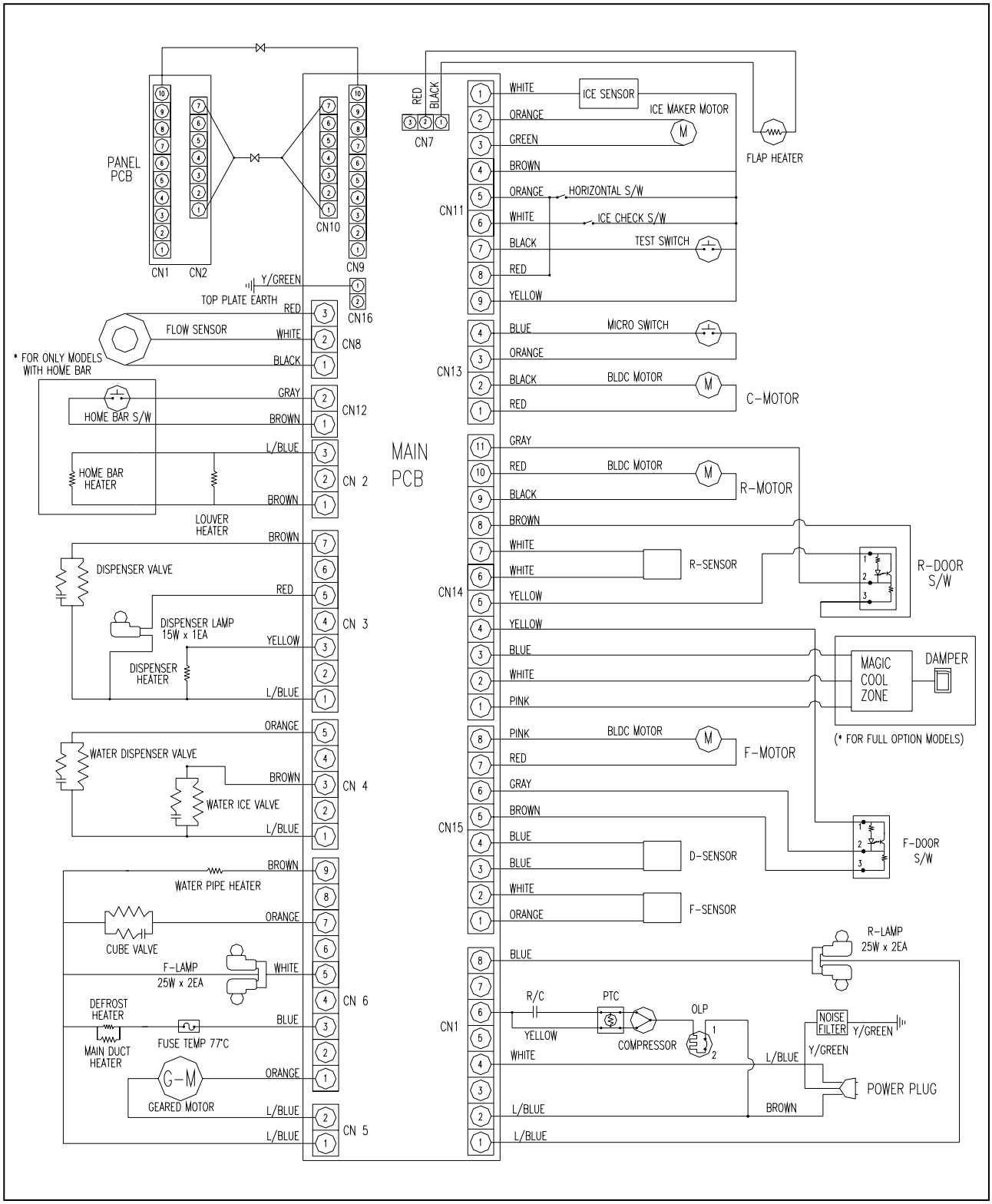

6-2. Circuit Diagram of Main PCB

- Basic Model

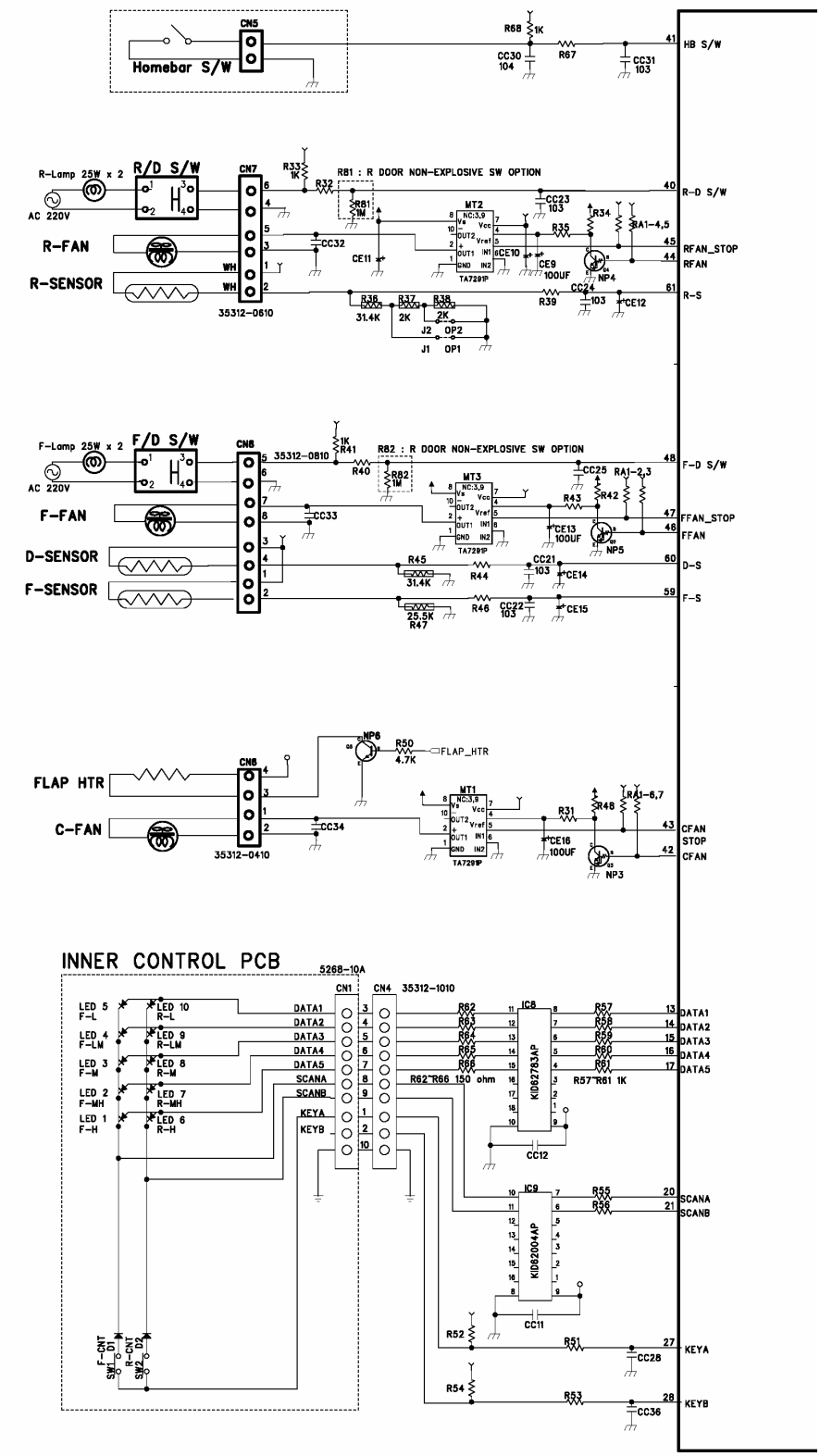

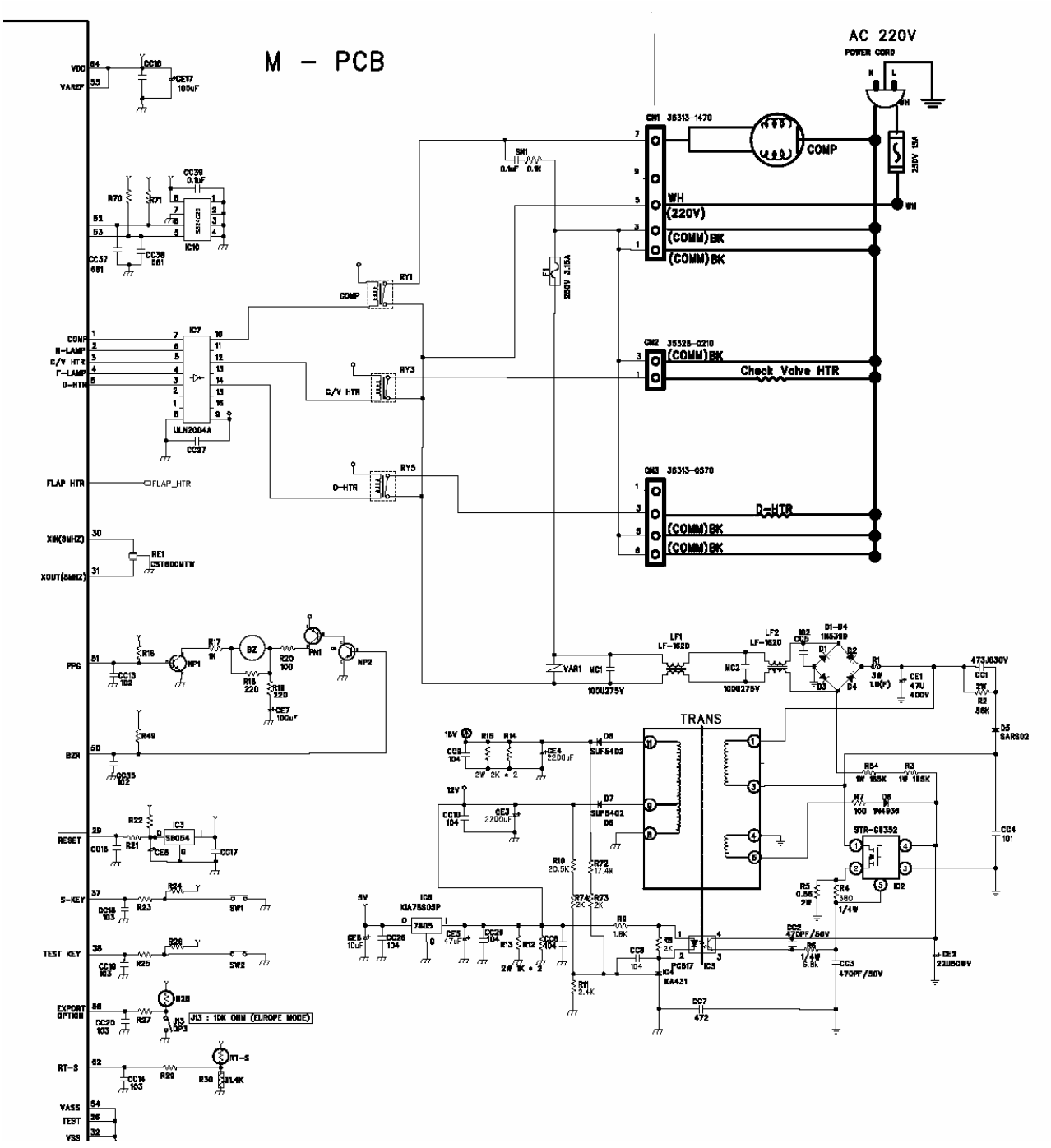
M - PCB
AC 220V
POWER CORD
COMP
WH
(220V)
(COMM)BK
(COMM)BK
Check Valve HTR
D-HTR
(COMM)BK
(COMM)BK
TRANS
FLAP_HTR
JP3 : 10K OHM (EUROPE MODE)

- Dispenser Model

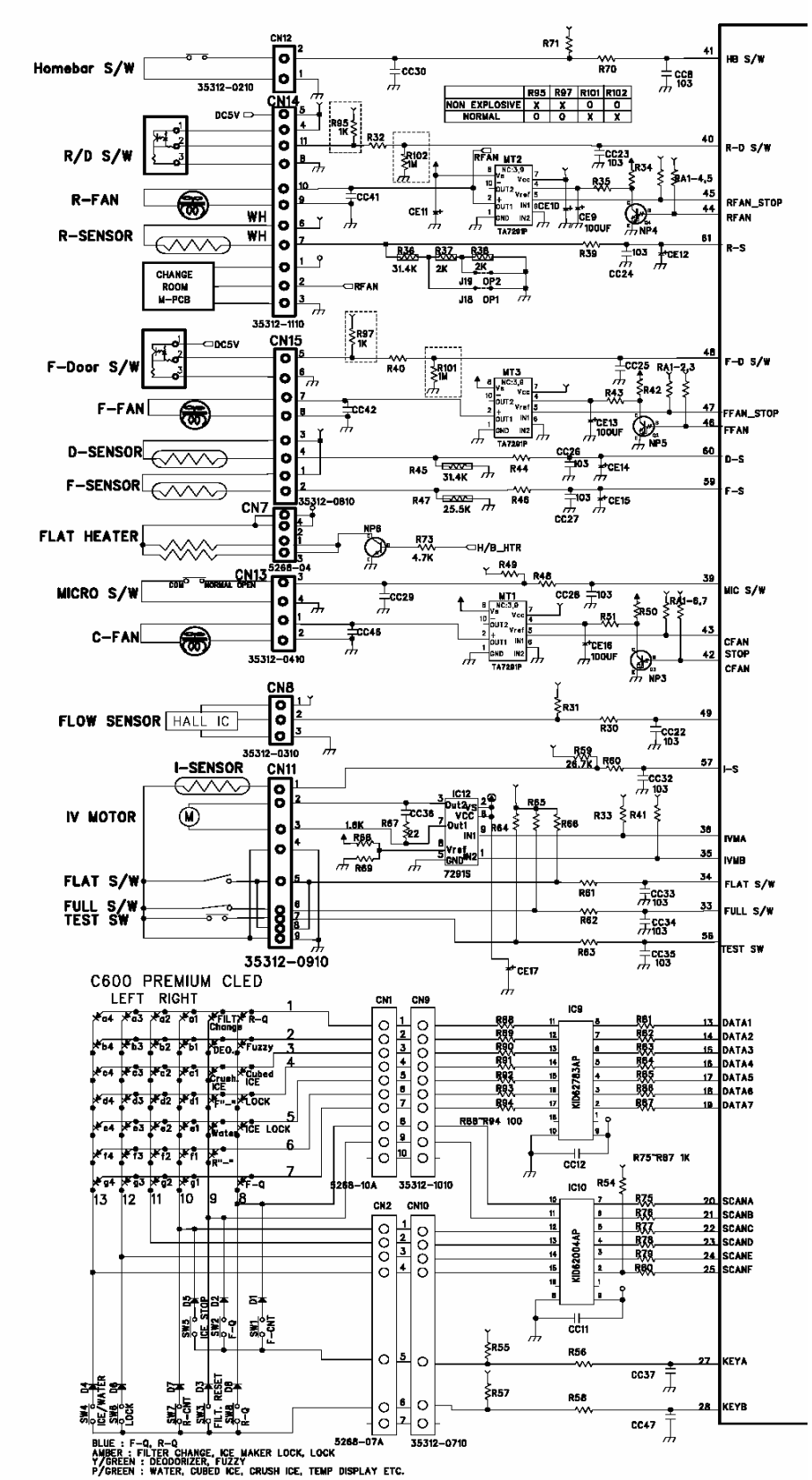

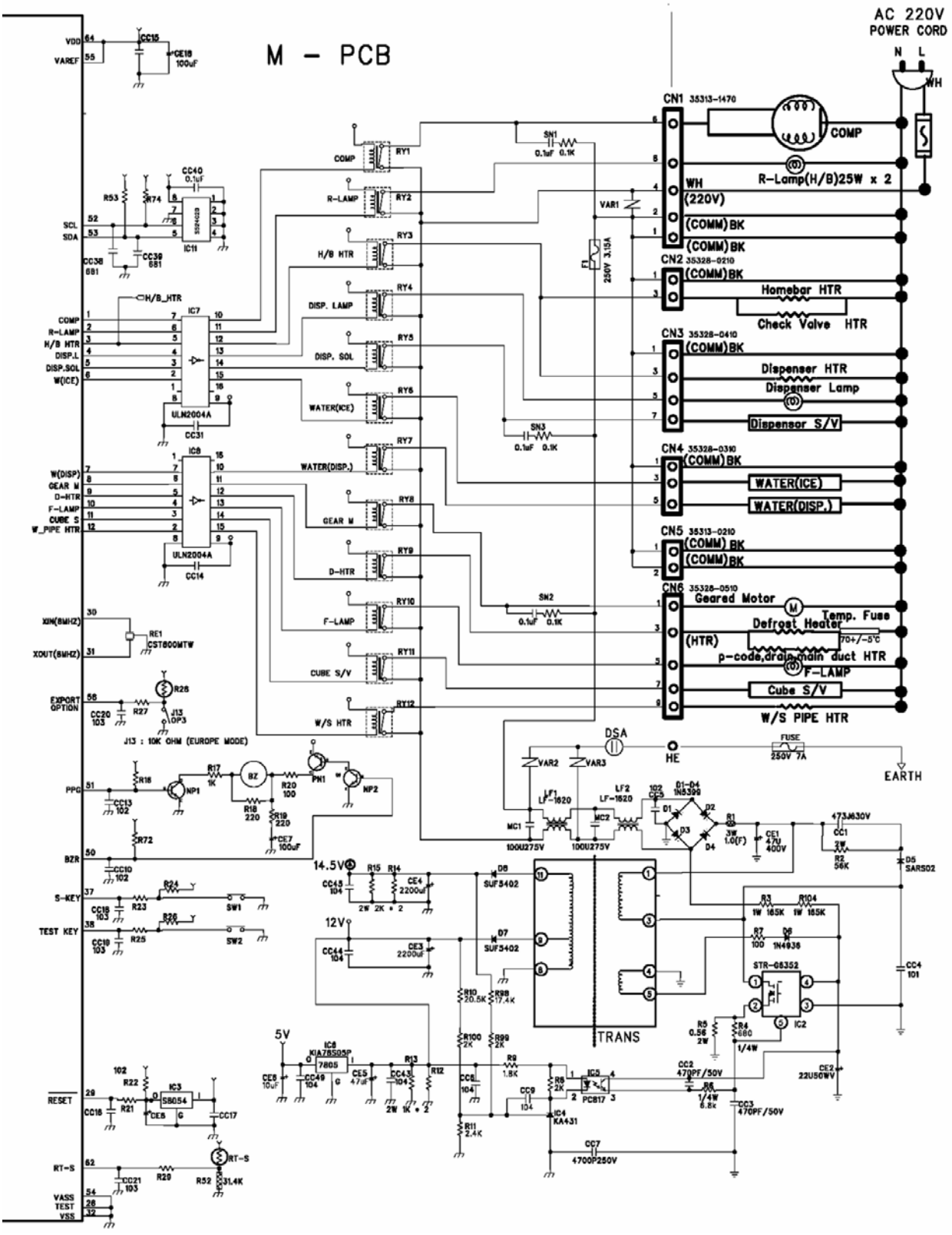
M - PCB
AC 220V
POWER CORD
N
L
WH
CN1 35313-1470
COMP
R-Lamp(H/B)25W x 2
WH
(220V)
(COMM)BK
(COMM)BK
CN2 35328-0210
(COMM)BK
Homebar HTR
Check Valve HTR
CN3 35328-0410
(COMM)BK
Dispenser HTR
Dispenser Lamp
Dispensor S/V
CN4 35328-0310
(COMM)BK
WATER(ICE)
WATER(DISP.)
CN5 35313-0210
(COMM)BK
(COMM)BK
CN6 35328-0510
Geared Motor
Temp. Fuse
Defrost Heater
(HTR)
70+/-5°C
p-code,drain,main duct HTR
F-LAMP
Cube S/V
W/S PIPE HTR
VDD
VAREF
SCL
SDA
COMP
R-LAMP
H/B HTR
DISP.L
DISP.SOL
W(ICE)
W(DISP)
GEAR M
D-HTR
F-LAMP
CUBE S
W_PIPE HTR
XIN(8MHZ)
XOUT(8MHZ)
EXPORT OPTION
PPG
BZR
S-KEY
TEST KEY
RESET
RT-S
VASS
TEST
VSS
IC7
ULN2004A
IC8
ULN2004A
IC11
IC3
S8054
IC6
KIA78S05P
7805
IC5
PC817
IC4
KA431
IC2
STR-G6352
TRANS
DSA
HE
FUSE
250V 7A
EARTH
J13 : 10K OHM (EUROPE MODE)
14.5V
12V
5V
SUF5402
SUF5402
SAR502
1N4936
1N5399
LF-1620
LF-1620
100U275V
100U275V
473J630V
470PF/50V
470PF/50V
4700P250V
22U50WV
CST800MTW
SW1
SW2
RT-S

7. COMPONENT LOCATE WIEW

7-1. Front View (Dispenser + Home bar Model)

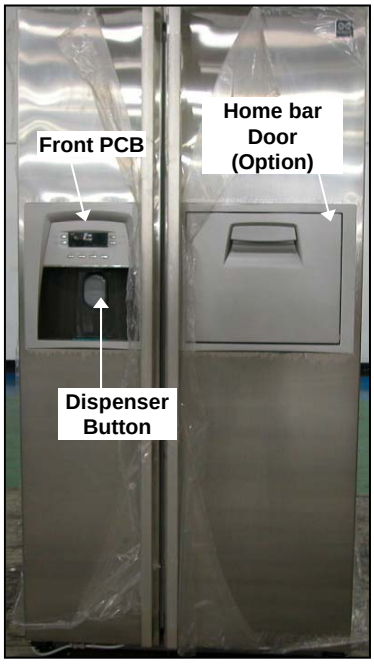



7-2. Inner View

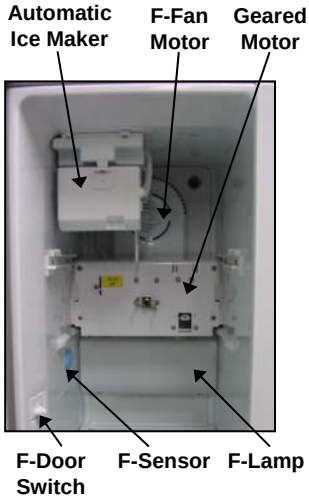

Freezer Compartment (Dispenser Model)

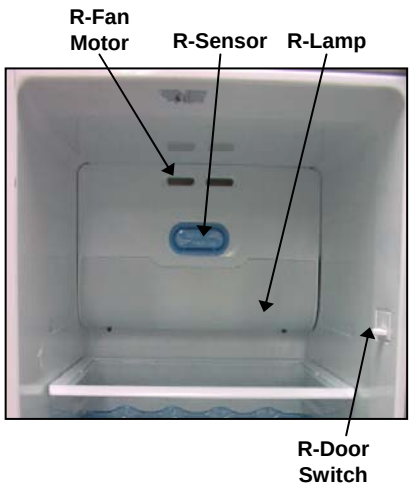

Refrigerator Compartment (Dispenser Model)

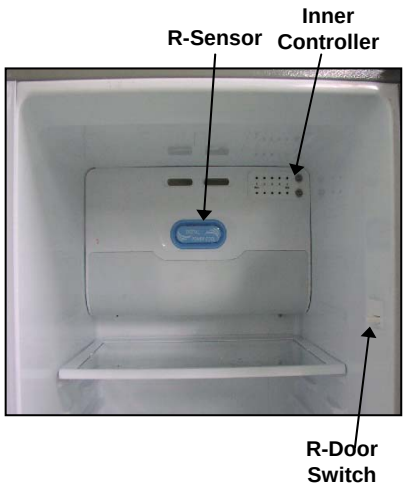

Refrigerator Compartment (Basic Model)

7-3. Evaporator

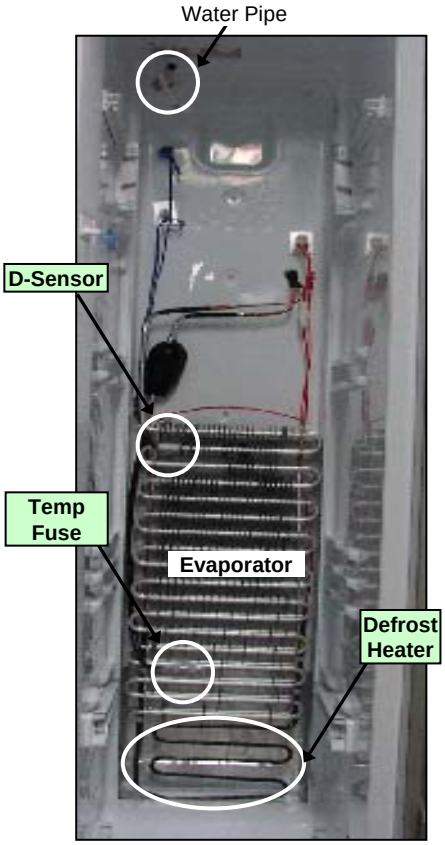

7-4. Machine Compartment

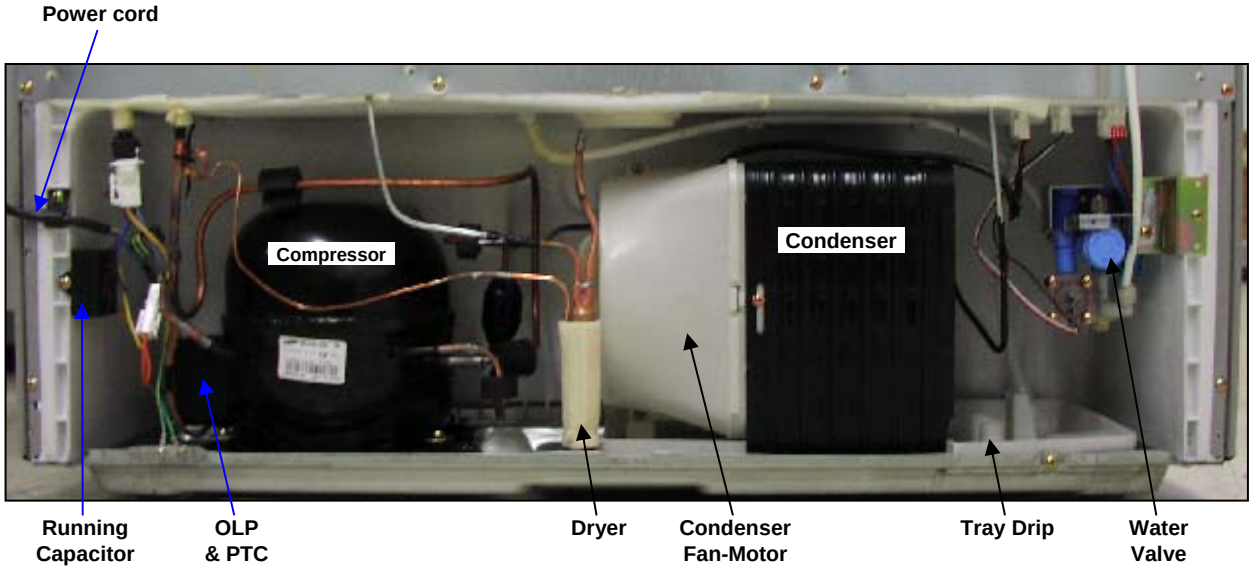

8. HOW TO CHECK EACH PARTS

8-1. Hose Ice Maker Tube Assembly

1) Disassembling Procedure

NO	DISASSEMBLING PROCEDURE	NO	DISASSEMBLING PROCEDURE
1	 ▷Pull forward Ice Storage Case	5	 ▷Remove 2 screws at the Cove Guide Cab W/Tube A.
2	 ▷Remove 2 screws.	6	 ▷Disassemble Cover Guide Cab W/Tube A
3	 ▷Pull forward Ice Maker.	7	 ▷Pull forward Hose Ice Maker Tube As.
4	 ▷Remove Water Hose Heater's 2P housing.	8	 ▷Check Hose Ice Maker Tube As.

2) How to check Hose Ice Maker Tube As.

How to check	CRITERION
 ▷Measure the resistance of two wire	▷Good: 9680Ω(±8%) (8900 ~ 10456Ω) ▷If defective, change

8-2. Bracket Geared Motor Assembly

1) Disassembling Procedure

NO	DISASSEMBLING PROCEDURE	NO	DISASSEMBLING PROCEDURE
1	 ▷Remove 2 screws.	4	 ▷Pull forward Bracket Geared Motor.
2	 ▷Unscrew (4 points).	5	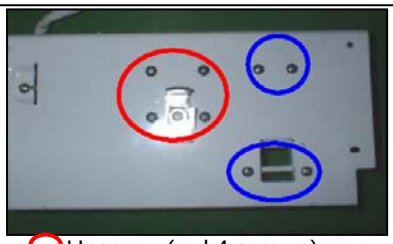 Unscrew (red 4 screws). Unscrew (blue 4 screws).
3	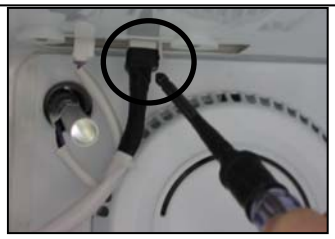 ▷Separate 6 pin housing of Bracket Geared Motor from the top connector.	6	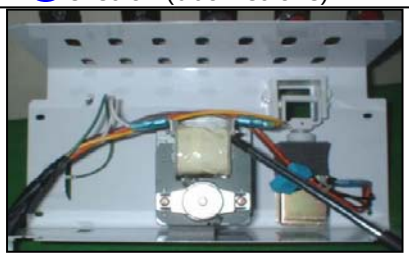 ▷Check Solenoid Valve and Geared Motor.

2) How to Check Hose Ice Maker Tube Assembly

PARTS	SPEC.	HOW TO CHECK	CRITERION
Geared Motor	▷SPEC. NAME :DAG-6502DEC ▷VOLTAGE :220/240V,50Hz	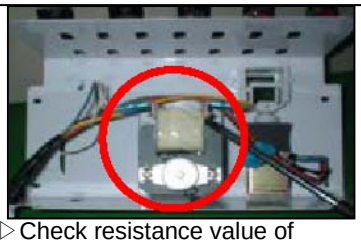 ▷Check resistance value of 2 terminals with a Multi Tester.	▷GOOD : 11.3Ω(±10%) (10.8 ~ 12.7Ω) ▷DEFECTIVE ; Change the Geared Motor.
Cube Sol Valve	▷SPEC. NAME :Cube SN8 ▷VOLTAGE :220/240V,50Hz	 ▷Check resistance value of 2 terminals with a Multi Tester.	▷GOOD : 145Ω(±8%) (133 ~ 156Ω) ▷DEFECTIVE ; Change the Cube Sol Valve.

8-3. Dispenser Micro Switch

1) Disassembling Procedure

NO	DISASSEMBLING PROCEDURE	NO	DISASSEMBLING PROCEDURE
1	 ▷ Insert (-) screw driver into bottom hole of Dispenser Button Guide. Pull up forward to remove the guide. (Be careful not to damage guide surface.)	3	 ▷Separate wire connectors from Micro Switch.
2	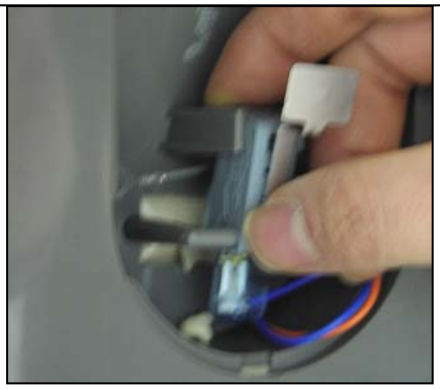 ▷ Remove Micro switch.	4	 ▷Check Micro Switch.

2) How to Check Micro Switch

PARTS	HOW TO CHECK	CRITERION
SPEC. NAME : VP333A-OD-8 VOLTAGE :125V,3A	 ▷Check both terminals (red circle) with a Multi Tester (Tester Mode : Resistance (Ω).	▷GOOD : Tact Switch (Blue Circle) / Terminals (Red circle) / Tester Result (Resistance Mode) ON (Close) / Connected / Some Value OFF (Open) / Disconnected / No value (0) ▷DEFECTIVE : Change Micro Switch.

8-4. Dispenser Solenoid Valve

1) Disassembling Procedure

NO	DISASSEMBLING PROCEDURE	NO	DISASSEMBLING PROCEDURE
1	 ▷ Insert (-) screw driver into bottom left groove of Cover Dispenser Box. Pull forward with a snap.(Be careful not to damage cover and door surface.)	4	  ▷Separate 2 terminals from Sol Valve and 2P Housings from Cover Ice Flap.
2	 ▷ Separate 2 housings of 10P / 7P from Front PCB. (Do not hold only wires to pull out.)	5	 ▷Unscrew (3 points) to remove Sol Valve.
3	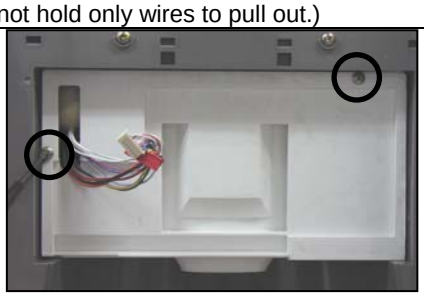 ▷Unscrew (2 points) to remove Box Dispenser Shut.	6	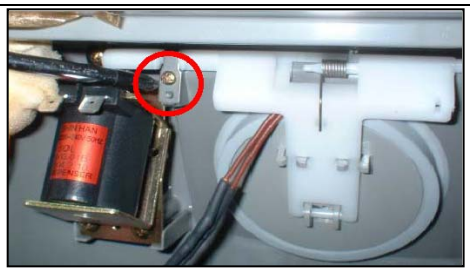 ▷Unscrew (1 point) to remove Cover Ice Flap.

2) How to Check Micro Switch

PARTS	SPEC.	HOW TO CHECK	CRITERION
Dispenser Sol Valve	▷SPEC. NAME :SOL2003-01B ▷VOLTAGE :220/240V,50Hz	 ▷Check resistance value of both terminals with a tester.	▷ Good : 215Ω(±10%) (193 ~ 236Ω) ▷DEFECTIVE : 0 Change Sol Valve.
Flap Heater Assembly	▷VOLTAGE :DC 12V,1.5W	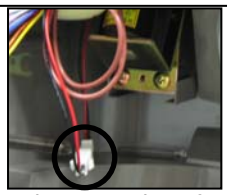 ▷Check resistance value of both terminals with a tester.	▷GOOD : 96Ω(±8%) (88 ~ 104Ω) ▷DEFECTIVE ; Change Flap Heater AS.

8-5. Main PCB

- Basic Model

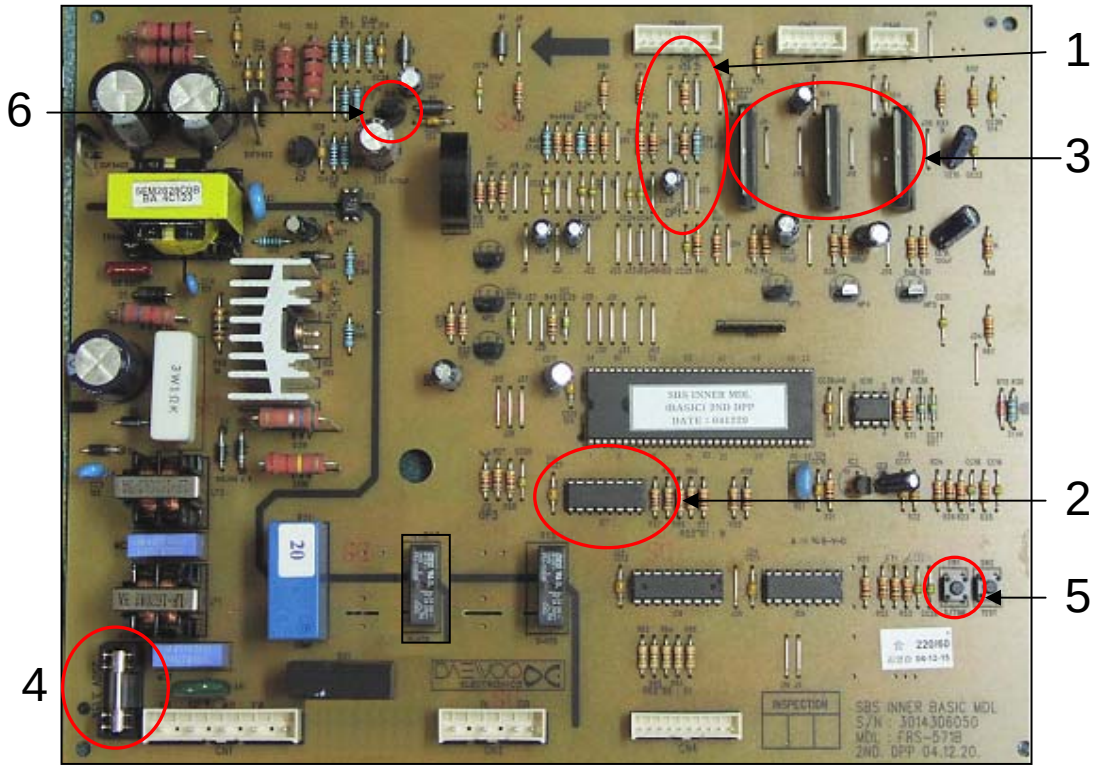

NO	ITEM	CHECK POINT	REMARK
1	Compensation of Weak Refrigeration →Making R-temp cooler	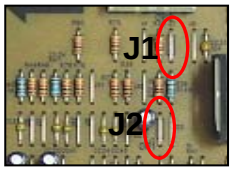 * Used when making R-temp. down to compensate for weak refrigeration without changing FCP temp. setting. ▷Cutting of J1 ; down by 1.5℃ ▷Cutting of J1, J2 ; down by 3℃	
2	Relay Power Controller	* To check normal voltage of each electrical devices to & from Mi-com. ▷Check input & output voltage of MICOM and IC7	
3	Fan Power Controller	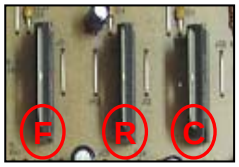 * To check input & output voltage of Fan  ▷#2 : Input ▷#5 : Output	
4	Electric Current Fuse	* To check when each device does not work (250V,3.15A)	
5	Time Shortening Switch	* To shorten time in PCB checkup (Pressing 1 time is regarded as 1 minute has passed.)	
6	Regulator IC(5V)	* To check voltage of MICOM and IC Voltage check of IC#6 (Input :12V,Output : 5V)	

- Dispenser Model

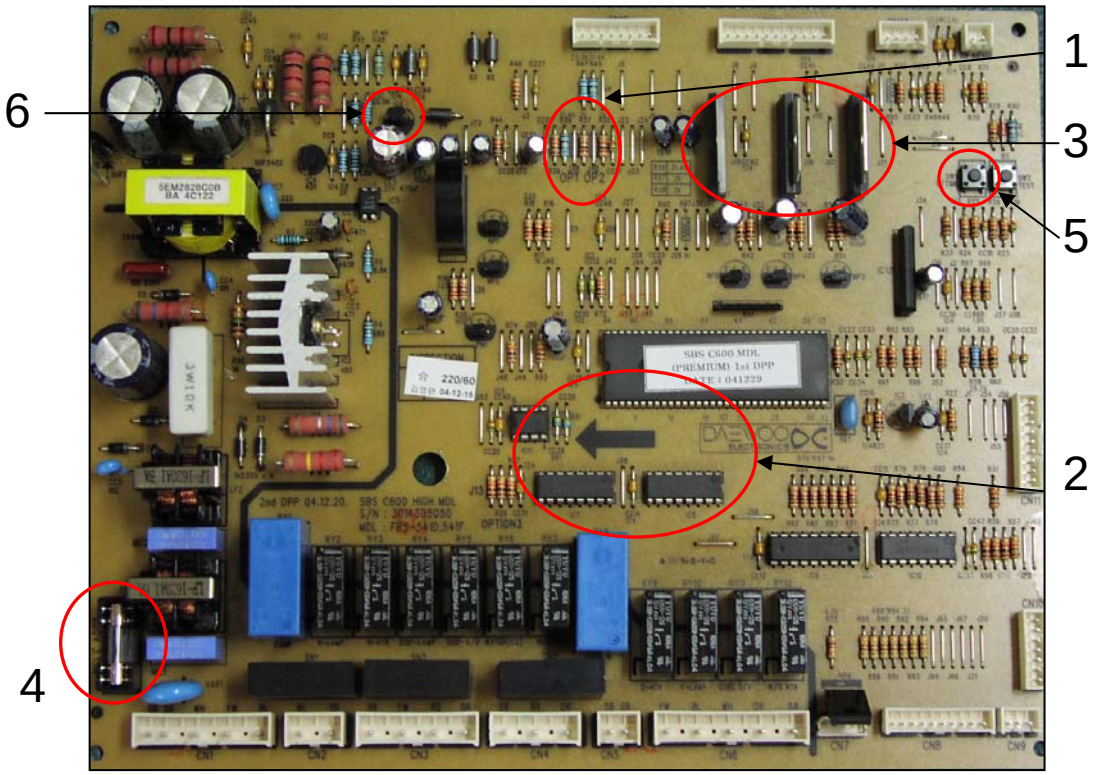

NO	ITEM	CHECK POINT	REMARK
1	Compensation of Weak Refrigeration →Making R-temp cooler	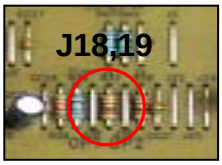 * Used when making R-temp. down to compensate for weak refrigeration without changing FCP temp. setting. ▷Cutting of J18 ; down by 1.5 ℃ ▷Cutting of J18, J19 ; down by 3℃	
2	Relay Power Controller	* To check normal voltage of each electrical devices to & from Mi-com. ▷Check input & output voltage of MICOM and IC7, 8.	
3	Fan Power Controller	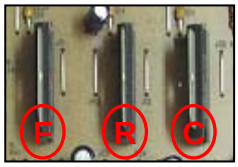 * To check input & output voltage of Fan  ▷#2 : Input ▷#5 : Output	
4	Electric Current Fuse	* To check when each device does not work (250V,3.15A)	
5	Time Shortening Switch	* To shorten time in PCB checkup (Pressing 1 time is regarded as 1 minute has passed.)	
6	Regurator IC(5V)	* To check voltage of MICOM and IC Voltage check of IC#6 (Input :12V,Output : 5V)	

8-6. Ice Maker

1) Disassembling Procedure

NO	DISASSEMBLING PROCEDURE	NO	DISASSEMBLING PROCEDURE
1	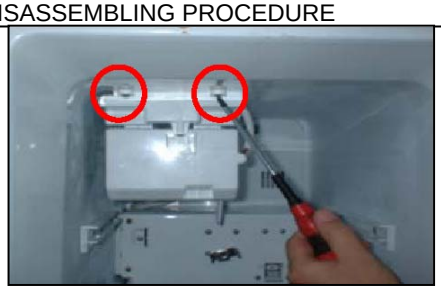 ▷ Remove 2 screws on top front of ice maker.	6	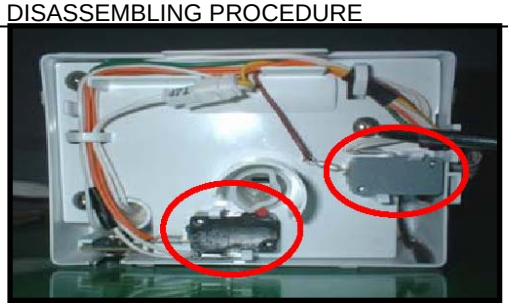 ▷Remove full ice sensing switch and level switch.
2	 ▷ Pull forward ice maker.	7	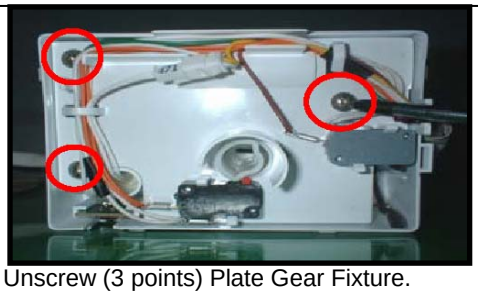 ▷Unscrew (3 points) Plate Gear Fixture.
3	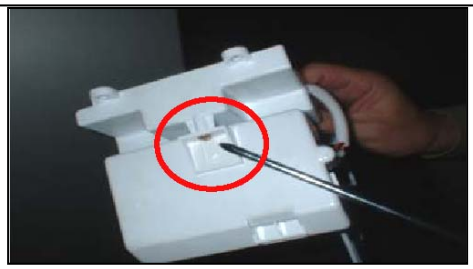 ▷Unscrew Fixture of Frame Ice Maker.	8	 ▷ Check if ice dropping motor is normal (OK).
4	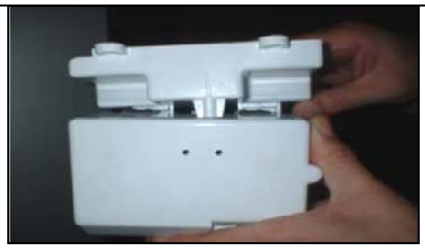 ▷Separate Ice Maker Assembly from Frame Ice Maker.	9	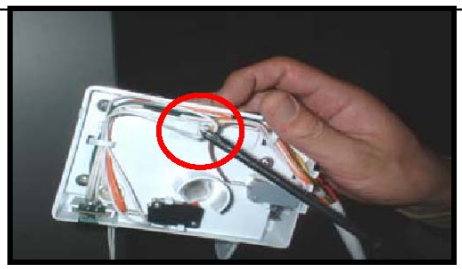 ▷Remove 2 pin housing from Plate Gear Fixture.
5	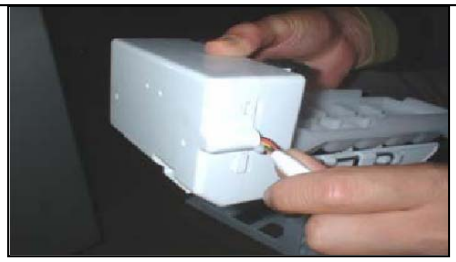 ▷ Separate Cover I/M (A) from Cover I/M (B) with a (-) screw driver.	10	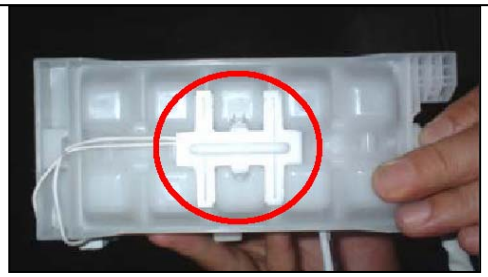 ▷ Remove I-sensor (ice sensor) from Case Icing As.

* Follow the reverse order when assembling.

2) How to Check Ice Maker

<table>
<tr><th>PARTS</th><th>HOW TO CHECK</th><th>CRITERION</th></tr>
<tr><td>Ice Dropping Motor</td><td> 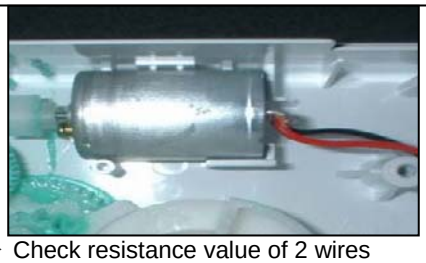
▷ Check resistance value of 2 wires with a Multi Tester.</td><td>▷ GOOD : RS-360RH-14250
: 6 ~ 14Ω

▷ DEFECTIVE :
Change the motor.</td></tr>
<tr><td>I-Sensor
(Ice Sensor)</td><td> 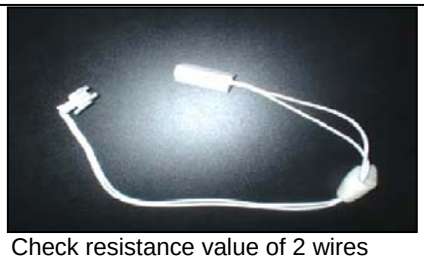
▷ Check resistance value of 2 wires with a Multi Tester.</td><td>▷ GOOD : 4.4 ~ 50kΩ
(It depends on surround temp.)

▷ DEFECTIVE :
Change the sensor.</td></tr>
<tr><td>Full Ice
Sensing Switch</td><td> 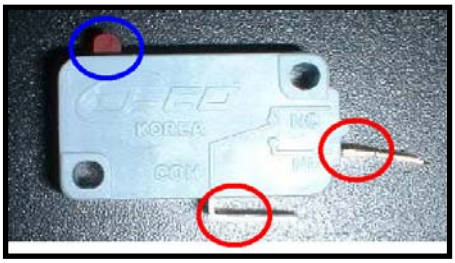
▷ Check resistance value of 2 terminals with a Multi Tester.</td><td>▷ GOOD :<table><tr><th>Tact Switch (Blue Circle)</th><th>Terminals (Red circle)</th><th>Tester Result (Resistance Mode)</th></tr><tr><td>ON (Close)</td><td>Connected</td><td>Some Value</td></tr><tr><td>OFF (Open)</td><td>Disconnected</td><td>No value (0)</td></tr></table>▷ DEFECTIVE :
Change the switch.</td></tr>
<tr><td>Level Switch</td><td> 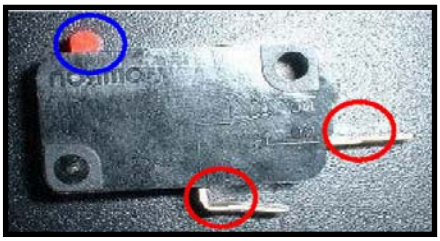
▷ Check resistance value of 2 terminals with a Multi Tester.</td><td>▷ GOOD :<table><tr><th>Tact Switch (Blue Circle)</th><th>Terminals (Red circle)</th><th>Tester Result (Resistance Mode)</th></tr><tr><td>ON (Close)</td><td>Connected</td><td>Some Value</td></tr><tr><td>OFF (Open)</td><td>Disconnected</td><td>No value (0)</td></tr></table>▷ DEFECTIVE :
Change the switch.</td></tr>
</table>

9. TROUBLE DIAGNOSIS

9-1. Faulty Start (F/R lights OFF , F-PCB Power OFF)

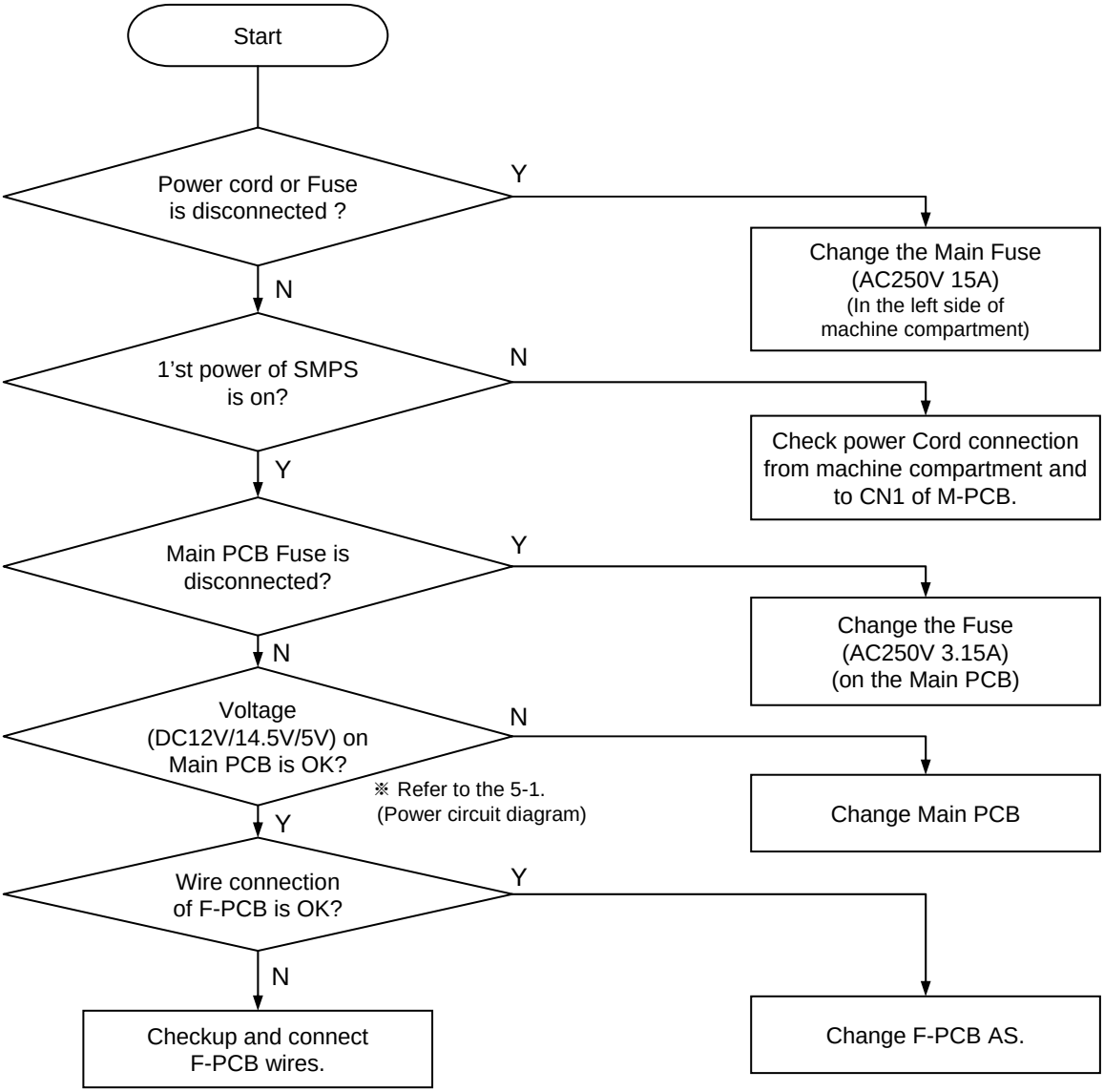

※ How to replace Front PCB





1) Insert a flat tip driver into the left down groove of panel frame and snap it out smoothly.
2) Separate 2 housings of 10P / 7P from Front PCB. (Do not hold only wires to pull out.)
3) Unscrew (7 points) to remove Front PCB.
   * Follow the reverse order when assembling.

9-2. Freezer Compartment

9-2-1. Freezing failure . (Foods are not frozen / cold.)

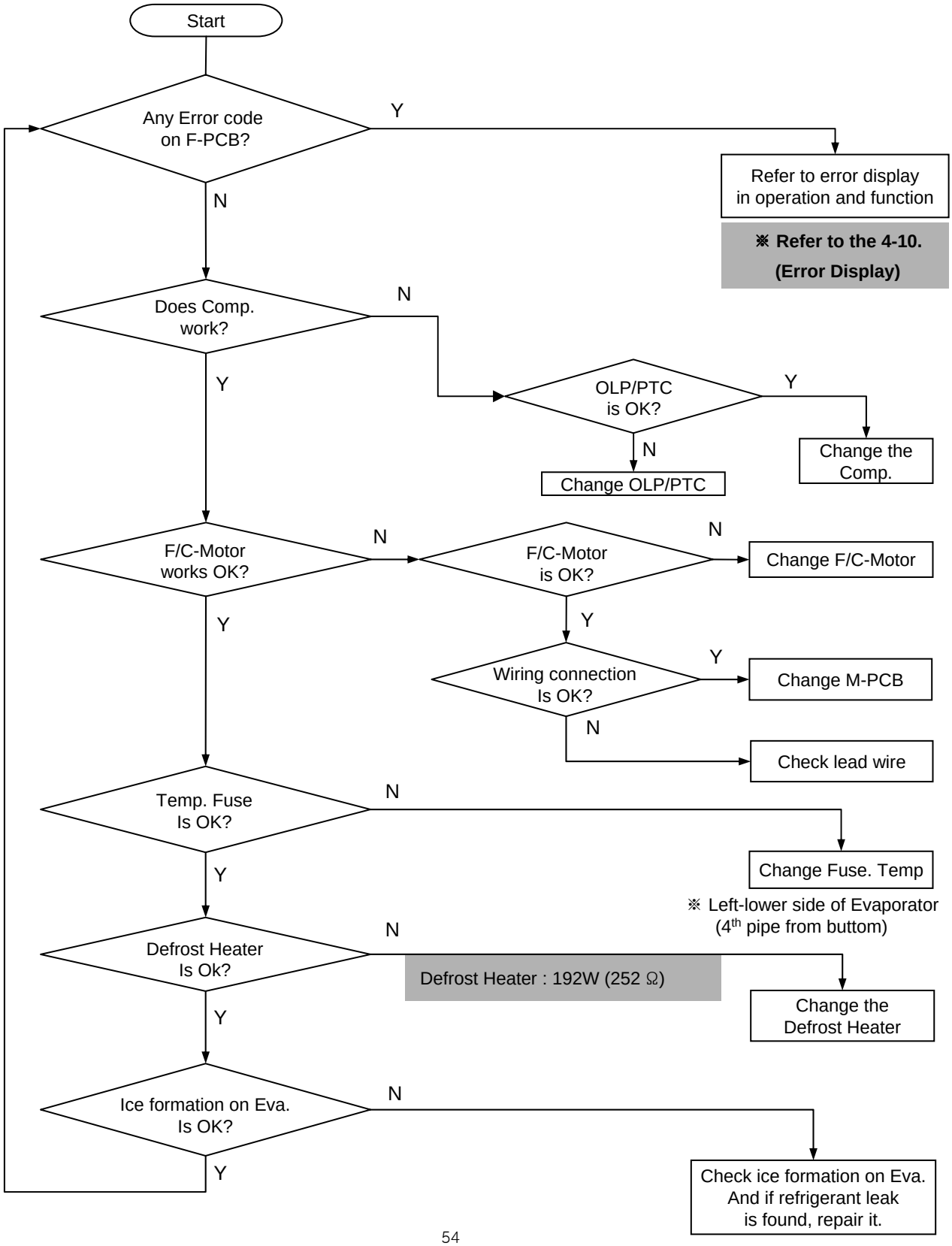

Removing and replacing Freezer parts

(1)





1) Remove foods.
2) Remove Ice Bucket, shelves and cases in Freezer compartment.

(2)

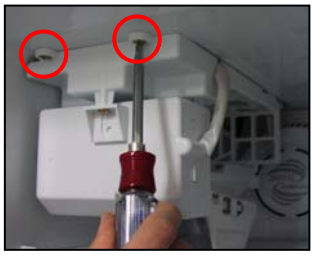

* Remove 2 screws of Ice Maker.

(3)



* Remove the Housing of Ice Maker AS. (Right side)

(4)



* Remove 4 screws of Geared Motor.

(5)



* Remove the Housing of Geared Motor AS. (Center)

Removing and replacing Freezer parts

(6)

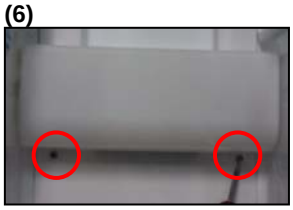

* Remove light cover screws.

(7)



* Pull down smoothly the bottom of light cover to remove.

(8)

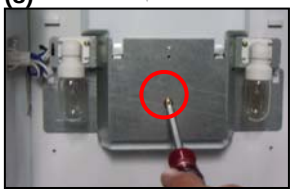

* Remove the screw of bracket F-Lamp.

(9)



* Remove the left housing.

(10)



* Pull out smoothly the bracket F-Lamp AS. to remove.

(11)



* Hold the end of F-Fan cover and pull forward slowly.

(12)

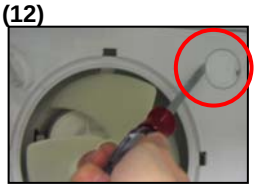

* Remove the screw cap on the F-Louver A with a flat tip driver.

(13)

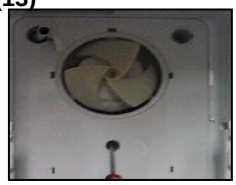

* Remove 3 screws of F-Louver A.

(14)



* Hold the end of F-Louver A and pull forward slowly.

(15)



* Remove the housing.

(16)

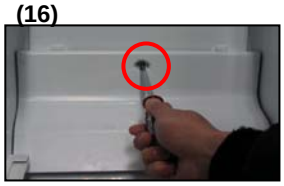

* Remove the screw of F-Return cover and pull out cover.

(17



* Hold the end of F-Louver B and pull forward slowly.

Removing and replacing Freezer parts

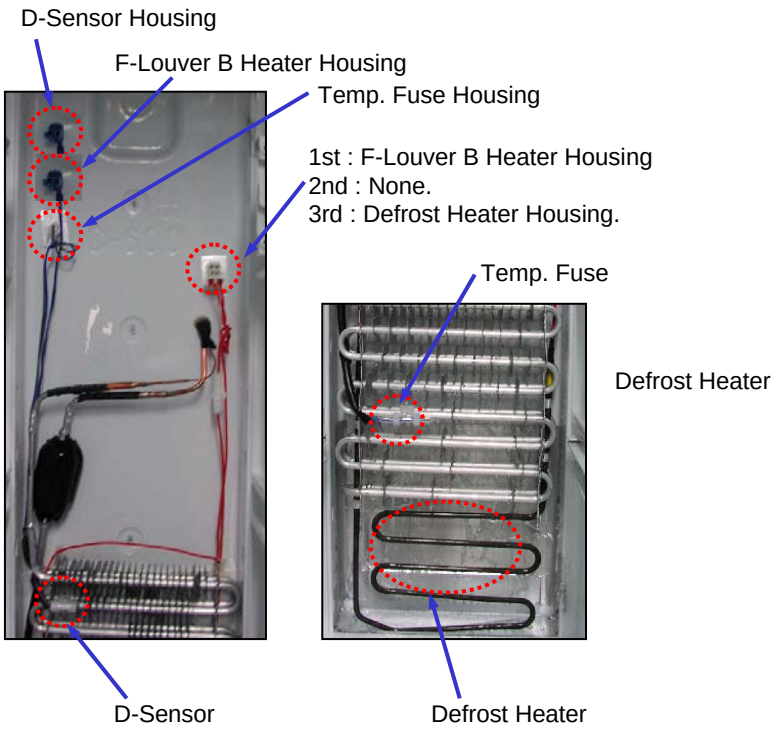

9-2-2. Ice Formation on F-Louver

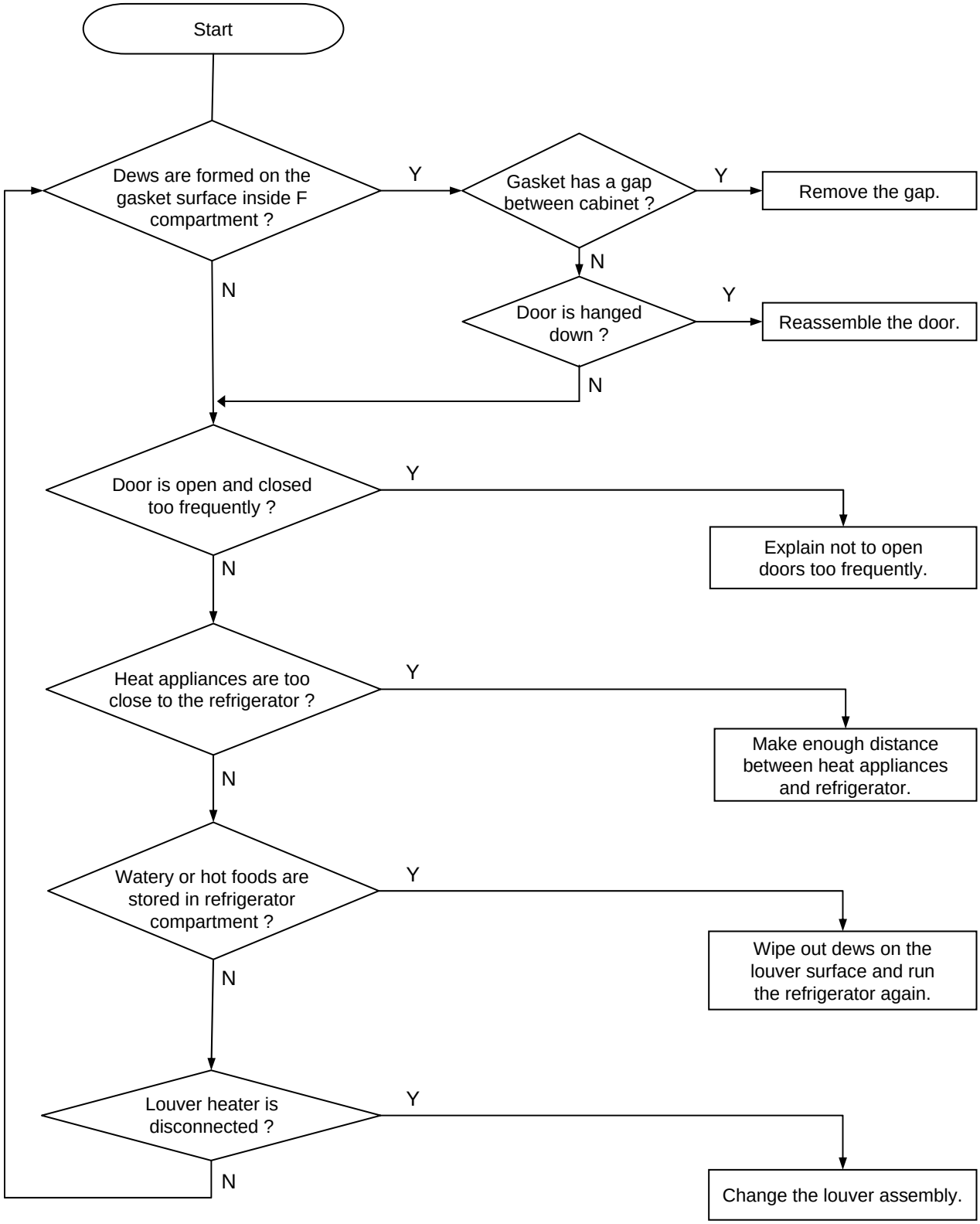

9-2-3. Disconnection / breaking of Freezer Lights Wires

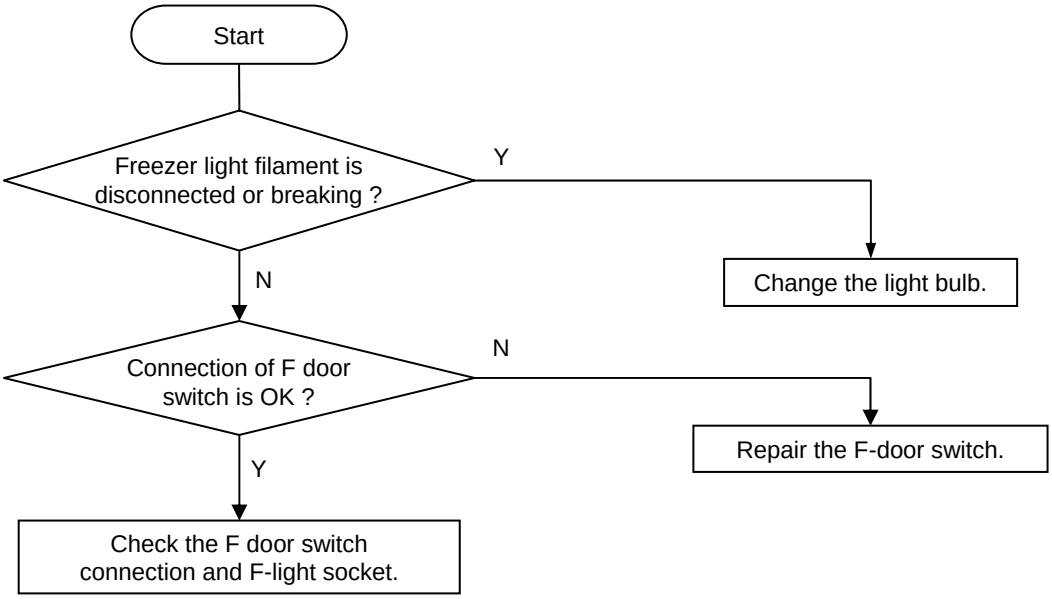

Change of F Lights

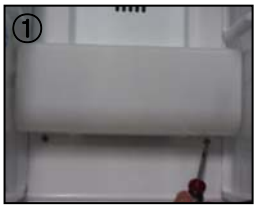

* Remove 2 screws of light cover.



* Hold the bottom of light cover and pull forward to remove.



* Change the light bulb. (AC240V 25W)

※ Follow the reverse order of disassembling after changing the light.

Change of F Door Switch



* Insert a flat tip screw driver Into a gap of door switch to pull forward.

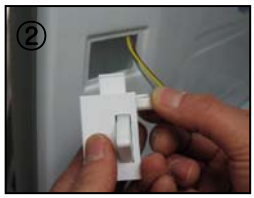

* Disconnect the housing and change the switch for a new one.

※ Be careful when changing the switch. F and R door switch are different in type and shape.

※ Follow the reverse order of disassembling after changing the switch.

9-3. Refrigerator Compartment

9-3-1. Refrigeration failure (Foods does not get cool or cold soon.)

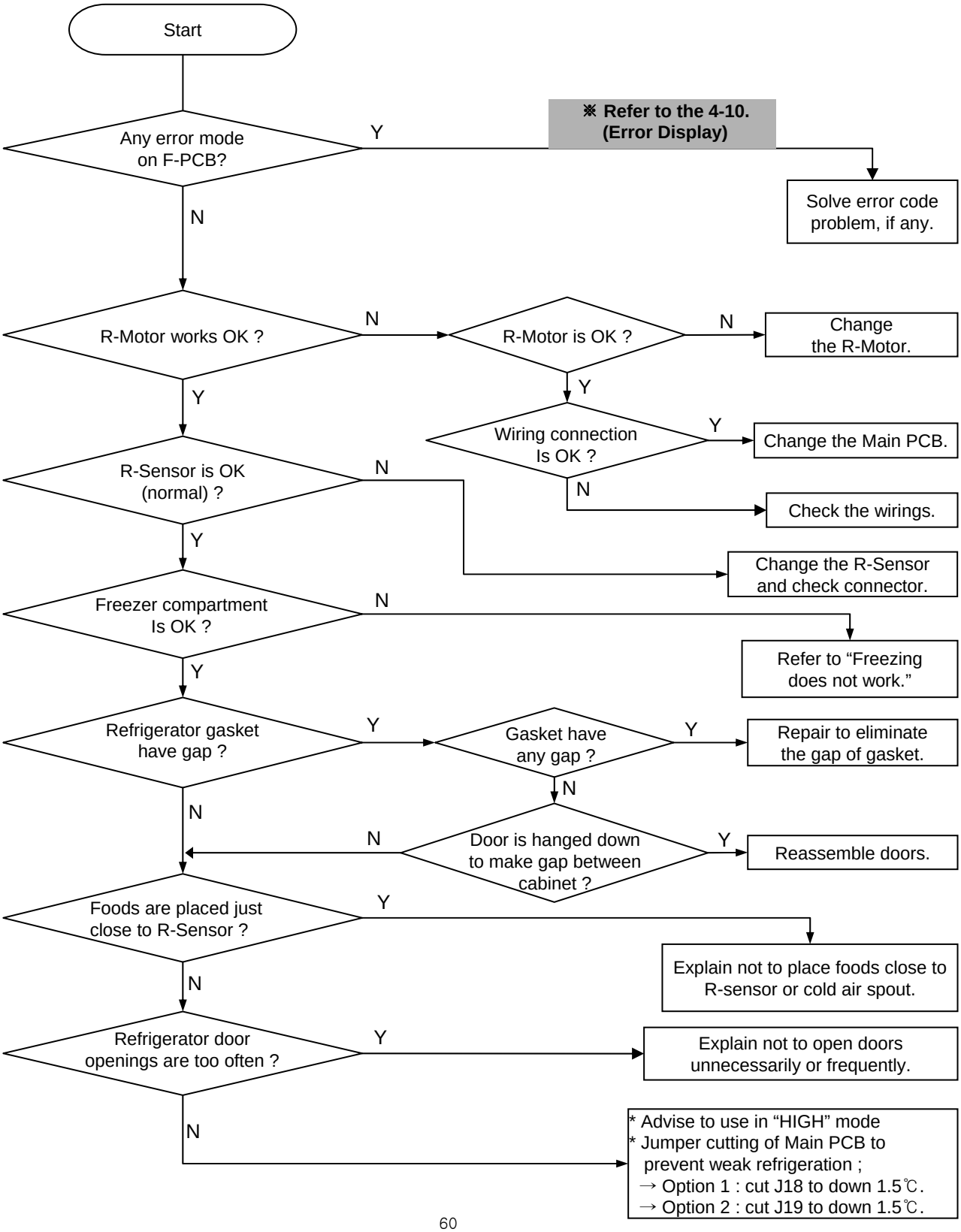

9-3-2. Disconnection / Breaking of Refrigerator Lights Wires

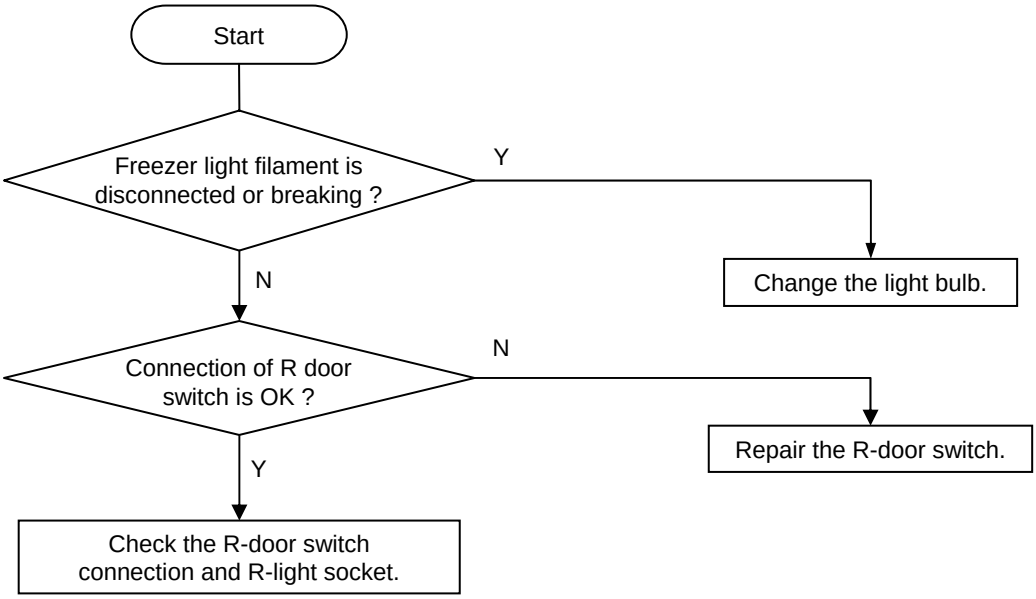

Change of R Lights

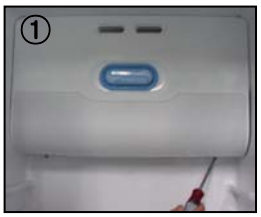

* Remove screws of light cover.



* Hold the bottom of cover and pull forward to remove.



* Change the light bulbs. (AC240V 25W)

※ Follow the reverse order of disassembling after changing the light.

Change of F Door Switch



* Insert a flat tip screw driver into a gap of door switch to pull forward.



* Disconnect the housing and change the switch for a new one.

※ Be careful when changing the switch. F and R door switch are different in type and shape.

※ Follow the reverse order of disassembling after changing the switch.

9-3-3. Dews on Refrigerator Compartment

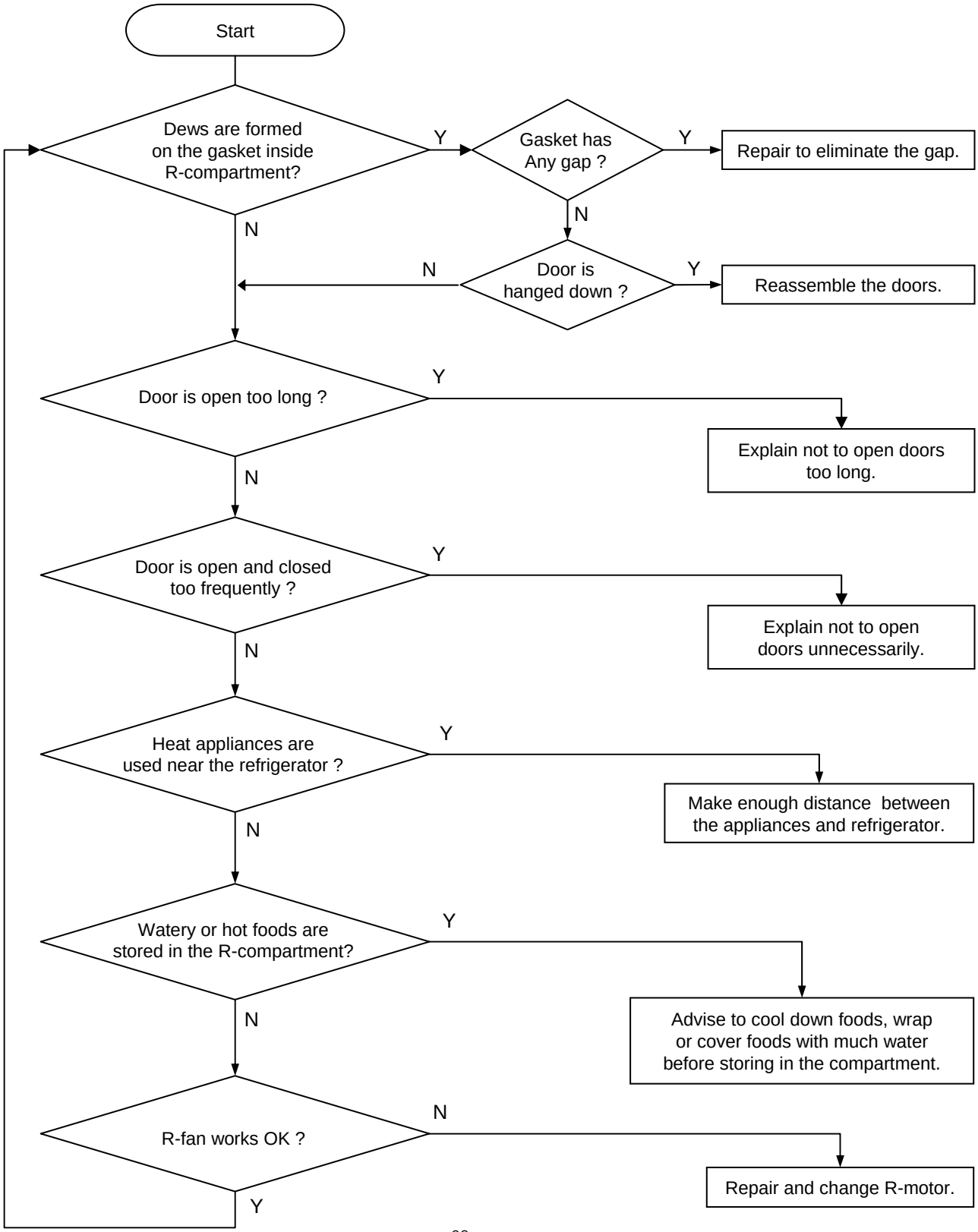

9-3-4. Excessive Refrigeration of Vegetable Case

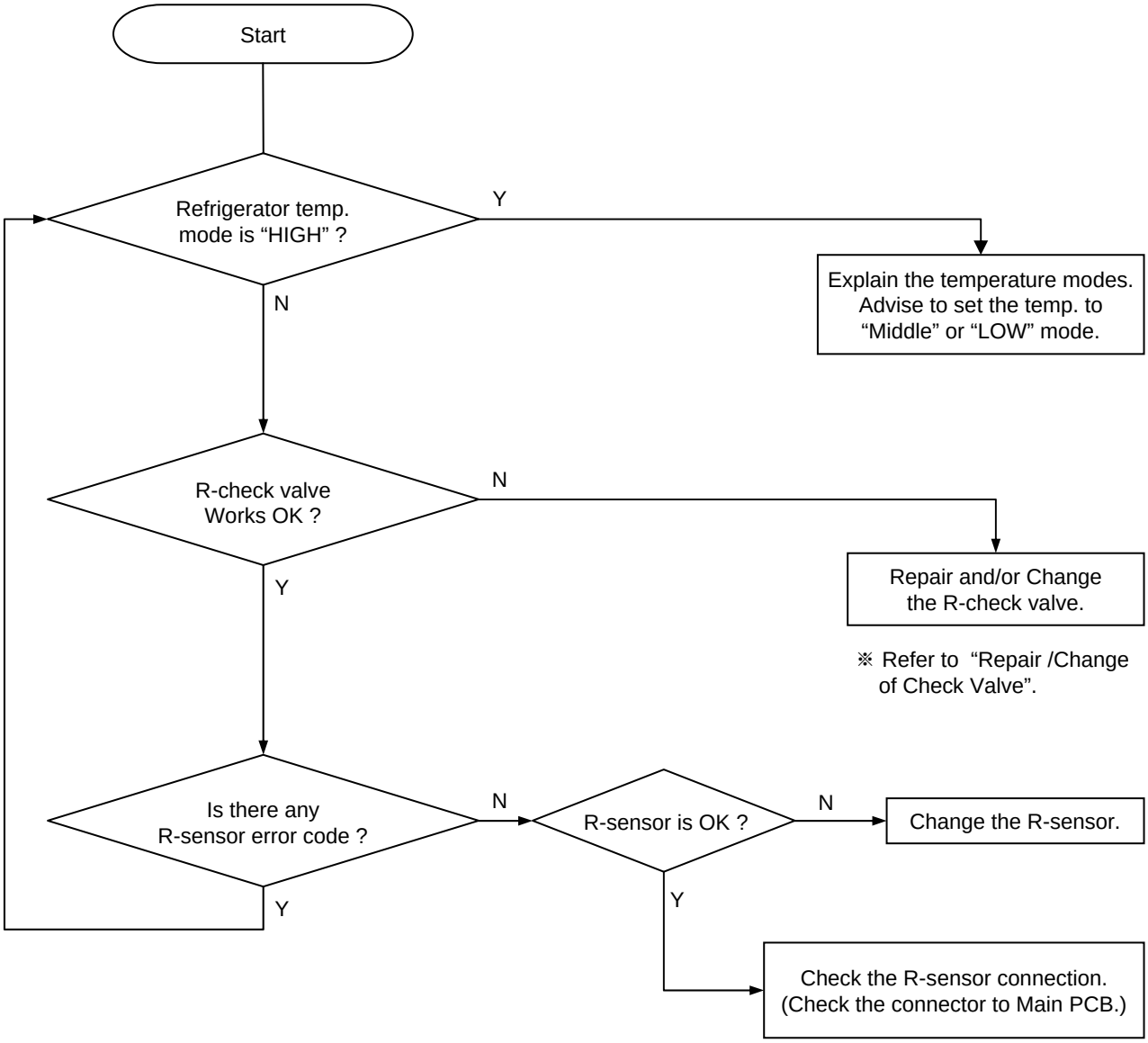

Removing of Check Valve

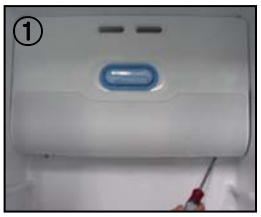

* Remove screws of light cover.

▼



* Hold the bottom of cover and pull forward to remove.

▼



* Disconnect light housing.

▼



* Remove screws with a (+)screw driver.



* Hold the bottom and right of damper to pull down to remove.

▼



* Lift up a piece of Check Valve Flap and insert a finger to the valve frame to hold out.

▼





9-4. Operation Noise of Refrigerator

9-4-1. Comp. operation Noise

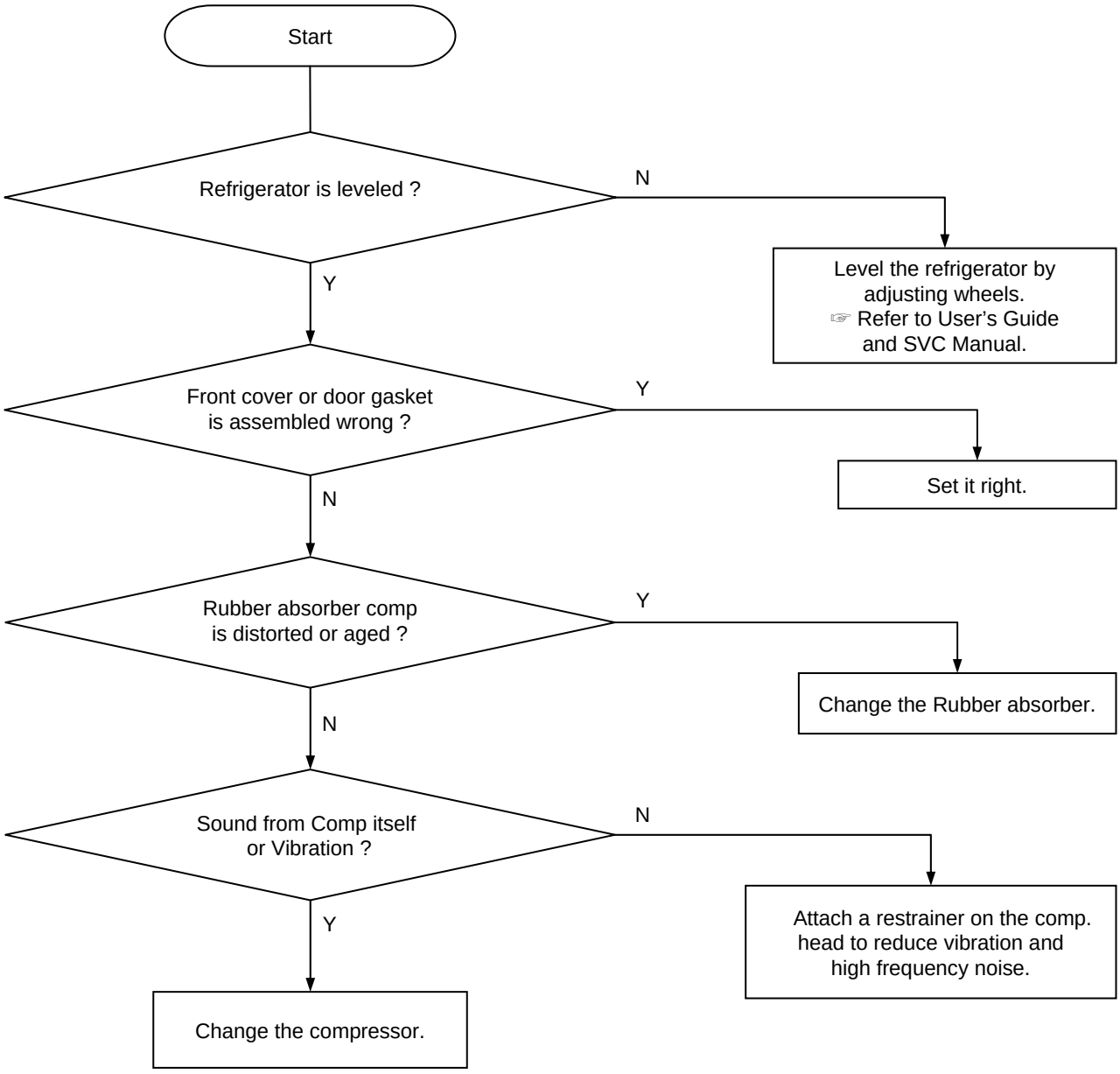

Remarks
● Compressor sound is somewhat normal because it works like a heart to circulate the refrigerant in the pipes during the refrigerator operation. ● Rattling or metallic touch sound of motor, piston of comp. can be heard when it starts or stops.

9-4-2. Refrigerant Flow Sound

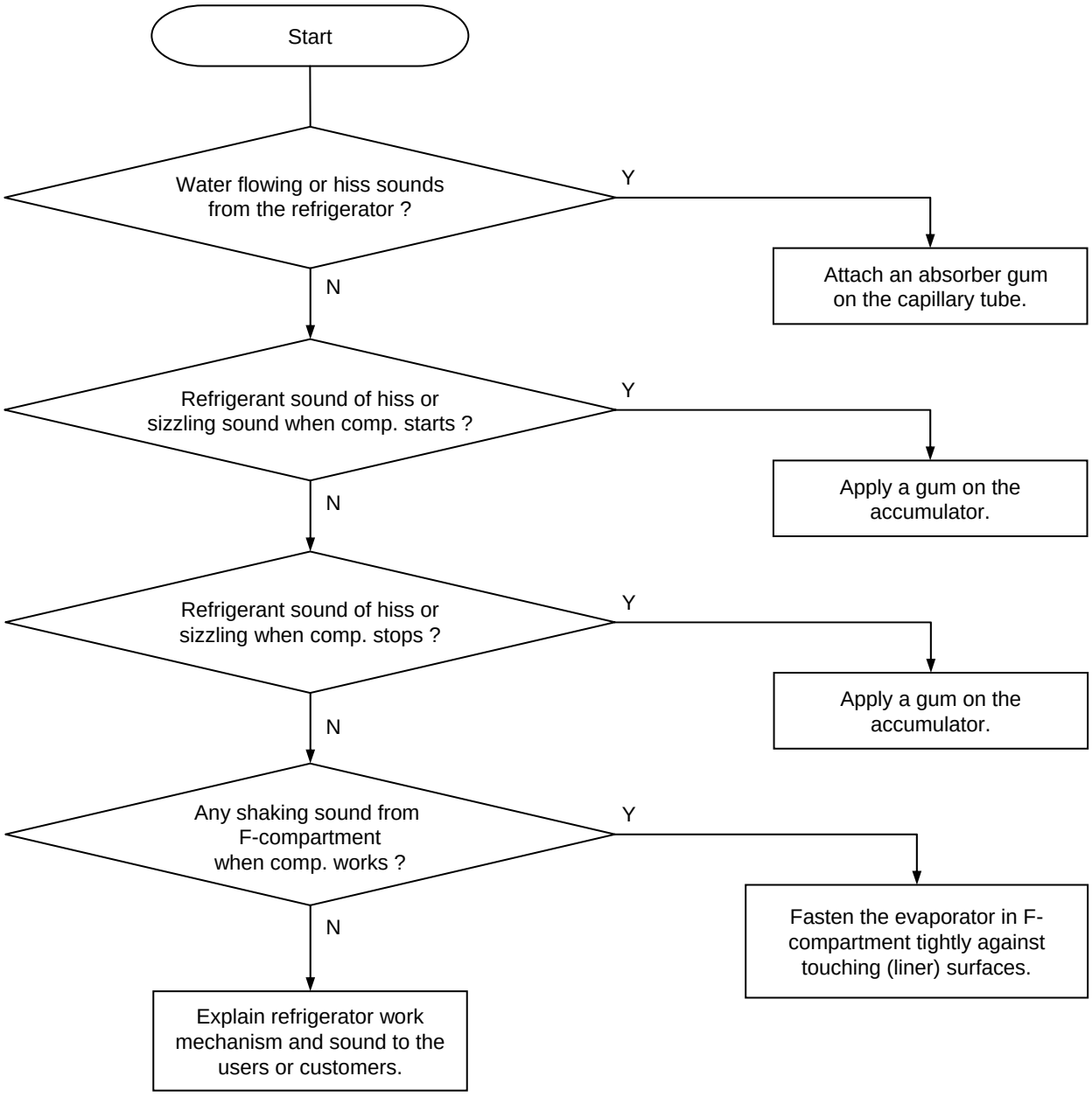

Remarks

● Water flowing sound, hiss or sizzling sound can make while refrigerant in the pipes is changing from liquid to gas state when comp. starts or stops.
It is normal to the refrigerator.

Troubleshooting of Evaporator Sound

1. Hiss Sound from Capillary Tube

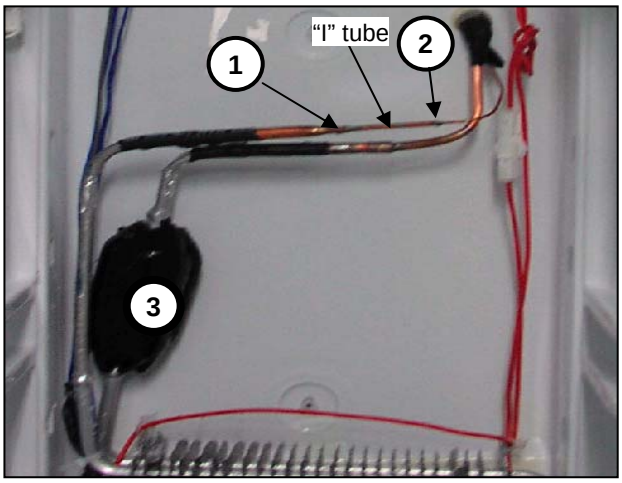

1) "I" tube is used to connect the capillary tube and evaporator. (2 welding points : ①, ②)

2) When such a sound is made, attach a absorber on the tube including 2 welding points.

2. Sizzling Sound from Accumulator

Attach a absorber on point ③ (accumulator).

3. Shaking or trembling Sound of Evaporator

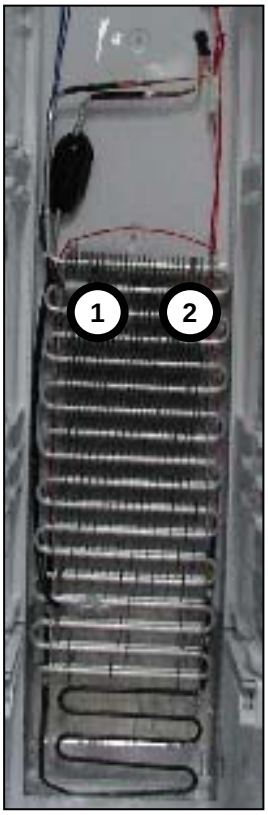

1) Check whether evaporator is fastened tight with the fasteners of ①, ②.

2) Insert a soft spacer (EPS) between left and right wall. Evaporator not to be shaken or trembled during refrigerator operation.

9-4-3. Fan Noise

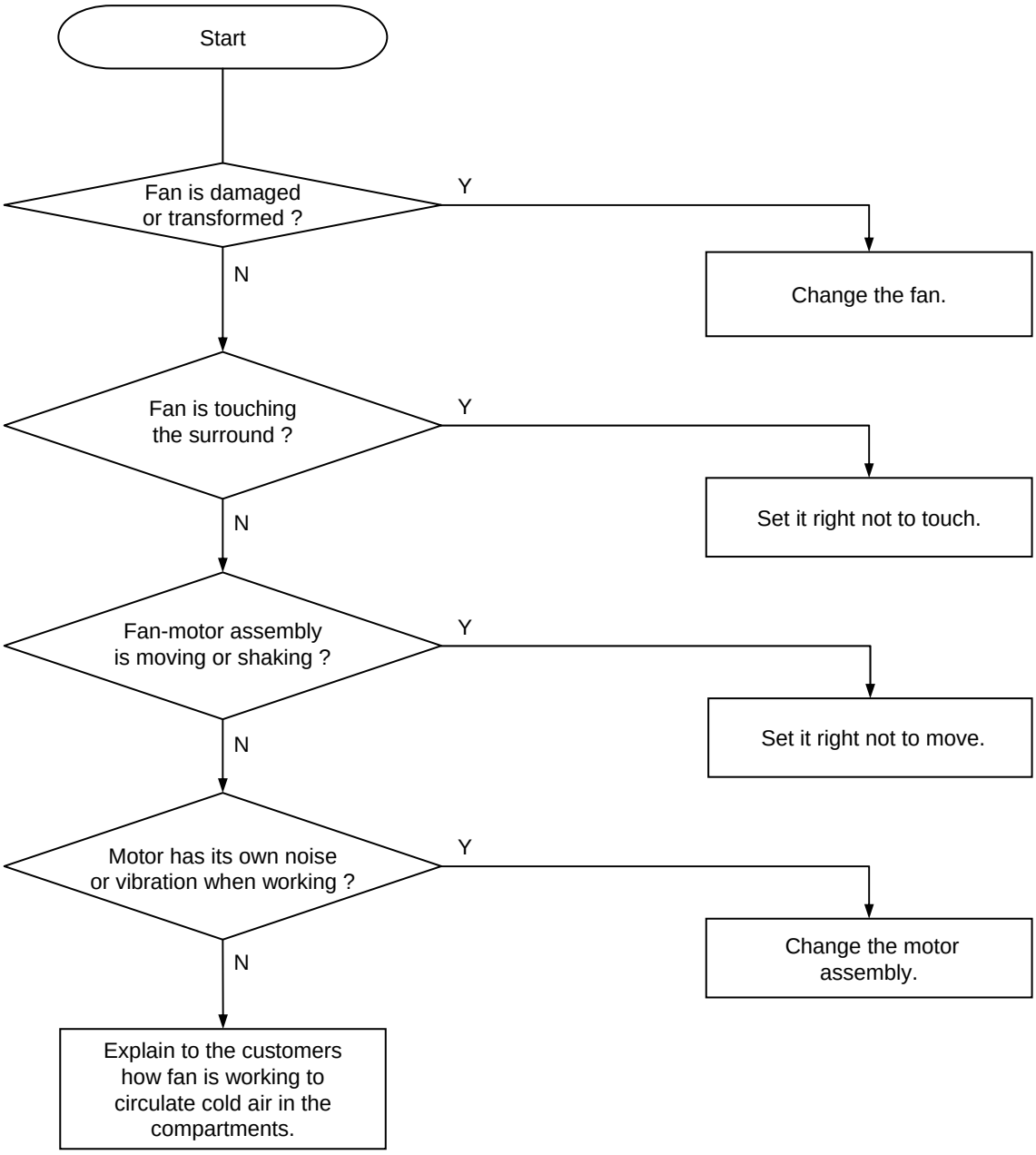

Remarks

● The fan is sending out cold air to circulate it through the compartments.
When the air is touching the surface of louver or liner wall, such sound can make.

Troubleshooting of Fan Noise

1. Fixing or Fastening of Fan Motor



1) Check if fan motor frame of the assembly is fastened tightly with screws to the liner wall. Unless it is tight, vibration of shaking can make.

2) Check if fan motor and fan are hanged down. Fan working sound can be louder if they are not set right.

2. Any Touch Sound from Fan

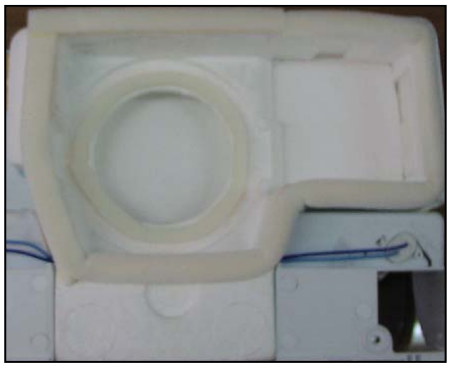

1) Check if sealing sponge on the insulator touches the fan.
If so, set it again not to touch it.

2) If any damage on the insulator around the fan rotation is found, set the fan motor assembly right not to touch it.

9-4-4. Pipe Noise

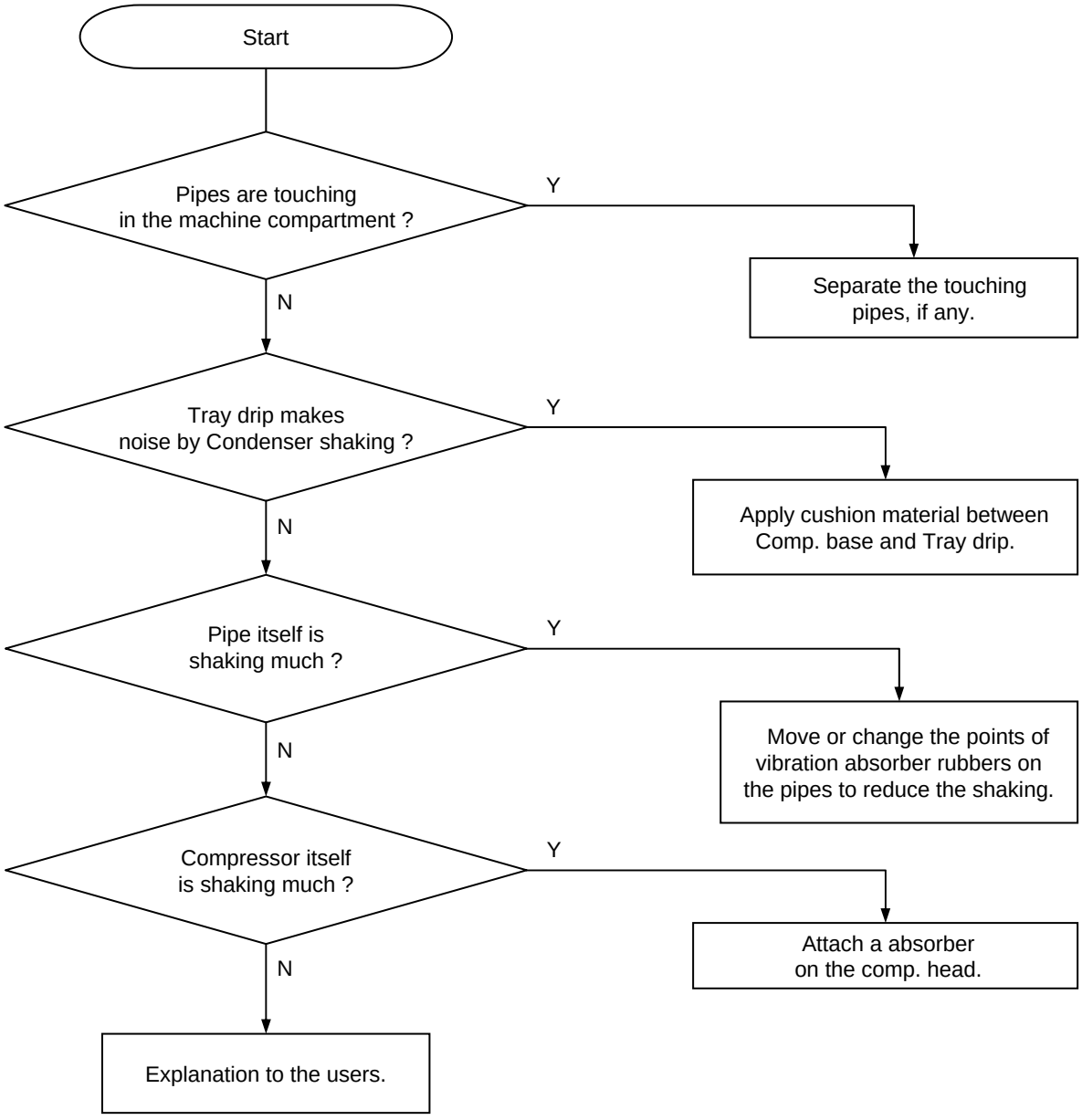

Remarks

- Refrigerant is erupting rapidly from the compressor to circulate pipes, so pipe shaking noise can make to some degree.
- In case compressor vibration is sent to a pipe directly, apply vibration absorber rubbers to welding points of the pipe and comp. or to a much bent point on the pipe.

9-5. Door

9-5-1. Door Opening Alarm Continues though the door is closed.

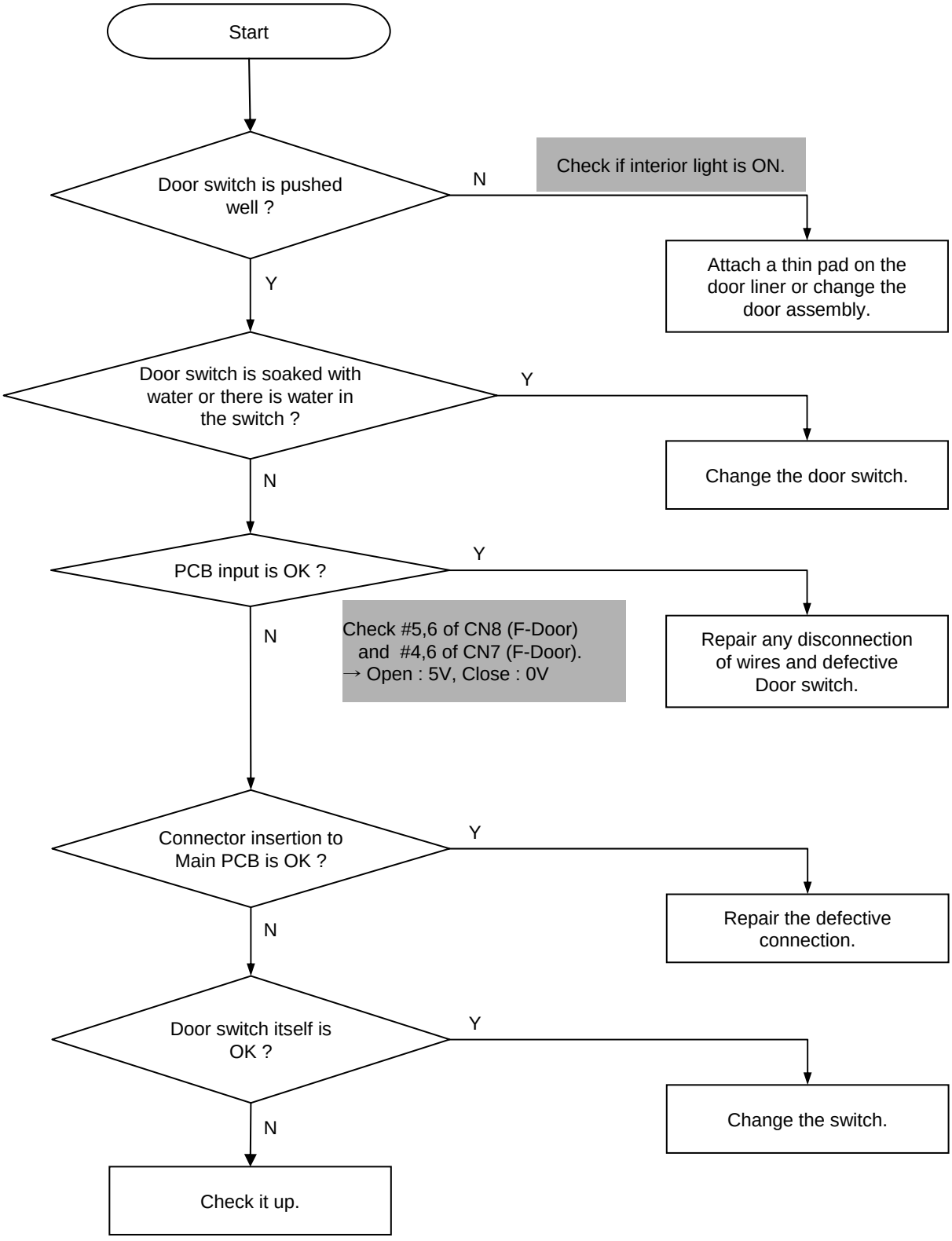

10. COOLING CYCLE HEAVY REPAIR

10-1. Summary of Heavy Repair

Process	Contents	Tools
Remove refrigerant Residuals	* Cut charging pipe ends (Comp. & Dryer) and discharge refrigerant from drier and compressor.	* Nipper, side cutters
Parts replacement and welding	* Confirm refrigerant (R-134a or R-600a) and oil for compressor and drier. * Confirm N2 sealing and packing conditions before use. Use good one for welding and assembly. * Weld under nitrogen gas atmosphere. * Repair in a clean and dry place.	* Pipe Cutter, Gas welder, N2 gas
Vacuum	* Evacuate for more than forty minutes after connecting manifold gauge hose and vacuum pump to high (drier) and low (compressor) pressure sides.	* Vacuum pump , Manifold gauge.
Refrigerant charging and charging inlet welding	* Weigh and control the bombe in a vacuum conditions with electronic scales and charge through compressor inlet (Process tube). * Charge while refrigerator operates). * Weld carefully after inlet pinching.	* Bombe (mass cylinder), refrigerant manifold gauge, electronic scales, punching off flier, gas welding machine
Check refrigerant leak and cooling capacity	* Check leak at weld joints. Note :Do not use soapy water for check. * Check cooling capacity → Check condenser manually to see if warm. → Check hot pipe manually to see if warm. → Check frost formation on the whole surface of the evaporator.	* Electronic Leak Detector, Driver.
Compressor compartment and tools arrangement	* Remove flux from the silver weld joints with soft brusher wet rag. (Flux may be the cause of corrosion and leaks.) *Clean tools and store them in a clean tool box or in their place.	* Copper brush, Rag, Tool box
Transportation and installation	* Installation should be conducted in accordance with the standard installation procedure. (Leave space of more than 5 cm from the wall for compressor compartment cooling fan mounted model.)	

10-2. Precautions During Heavy Repair

Items	Precautions
Use of tools.	1) Use special parts and tools for R-134a or R-600a
Removal of retained refrigerant.	1) Remove retained refrigerant more than 5 minutes after turning off a refrigerator. (If not, oil will leak inside.) 2) Remove retained refrigerant by cutting first high pressure side (drier part) with a nipper and then cut low pressure side. (If the order is not observed, oil leak will happen.) 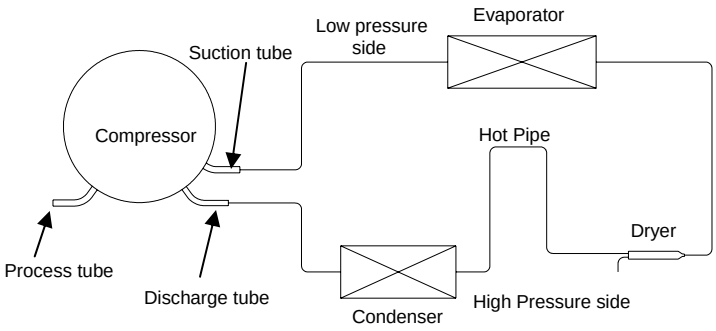
Replacement of drier.	1) Be sure to replace drier when repairing pipes and injecting refrigerant.
Nitrogen blowing welding.	1) Weld under nitrogen atmosphere in order to prevent oxidation inside a pipe. (Nitrogen pressure : 0.1~0.2 kg/cm2.)
Others.	1) Nitrogen only should be used when cleaning inside of cycle pipes inside and sealing. 2) Check leakage with an electronic leakage tester. 3) Be sure to use a pipe cutter when cutting pipes. 4) Be careful not the water let intrude into the inside of the cycle.

10-3. Practical Work for Heavy Repair

Items	Precautions
1. Removal of residual refrigerant.	1) Remove residual refrigerant more than 5 minutes later after turning off the refrigerator. (If not, compressor oil may leak inside.) 2) Remove retained refrigerant slowly by cutting first high pressure side (drier part) with a nipper and then cut low pressure side. 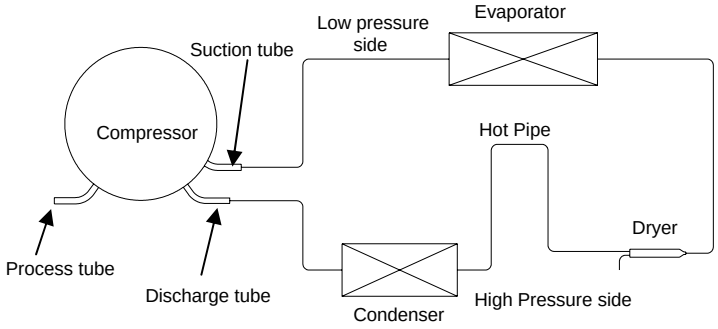
2. Nitrogen blowing welding.	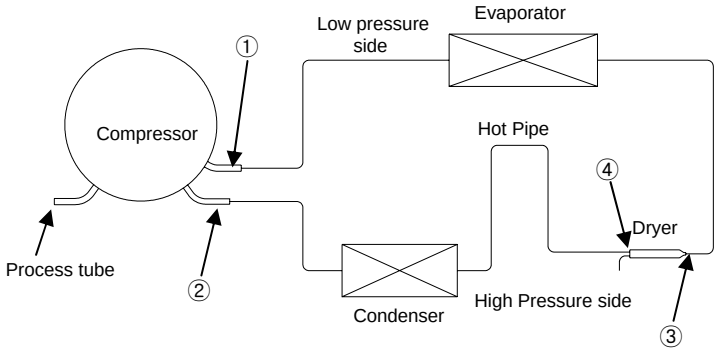 *** When replacing a drier:** Weld ①and② parts by blowing nitrogen (0.1~0.2kg/cm2) to high pressure side after assembling a drier. *** When replacing a compressor:** Weld ③and④ parts by blowing nitrogen to the low pressure side. Note) For other parts, nitrogen blowing is not necessary because it does not produce oxidized scales inside pipe because of its short welding time. **※ KEYPOINTING** Welding without nitrogen blowing produces oxidized scales inside a pipe, Which affect on performance and reliability of a product.

Items	Precautions
3.Vacuum degassing.	*** Pipe Connection** Connect a red hose to the high pressure side and a blue hose to the low pressure side. *** Vacuum Sequence** Open ①,② valves and evacuate for 40 minutes. Close valve ①. 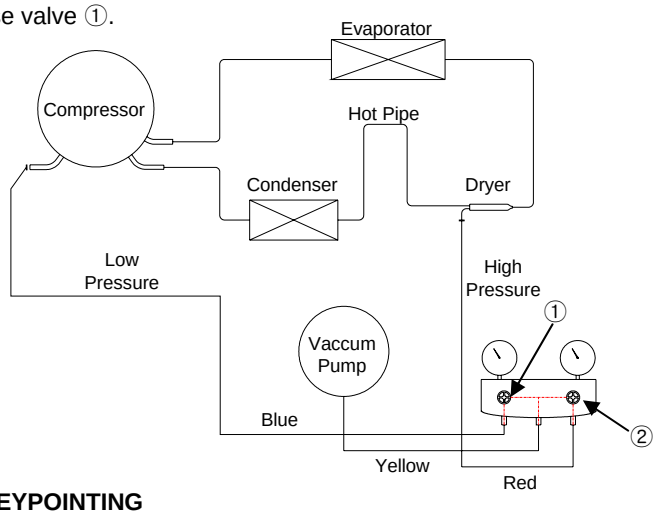 **※ KEYPOINTING** 1) If power is applied during vacuum degassing, vacuum degassing shall be more effective. 2) Operate compressor while charging refrigerant. (It is easier and more certain to do like this.)
4.Refrigerant charging.	*** Charging sequence** 1) Check the amount of refrigerant supplied to each model after completing vacuum degassing. 2) Evacuate bombe with a vacuum pump. 3) Measure the amount of refrigerant charged. - Measure the weight of an evacuated bombe with an electronic scale. - Charge refrigerant into a bombe and measure the weight. Calculate the weight of refrigerant charged into the bombe by subtracting the weight of an evacuated bombe. 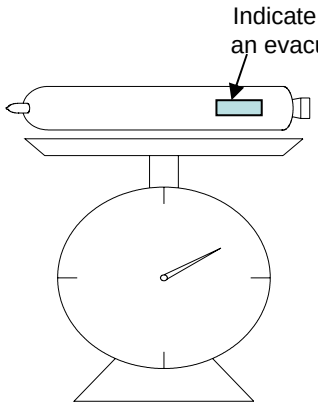 **※ KEYPOINTING** 1) Be sure to charge the refrigerant at around 25°C. 2) Be sure to keep -5g in the winter and +5g in summer. Calculation of amount of refrigerant charged the amount of refrigerant charged = a weight after charging - a weight before charging (a weight of an evacuated cylinder)

Items	Precautions
4.Refrigerant charging.	4) Refrigerant Charging Charge refrigerant while operating a compressor as shown above. 5) Pinch a charging pipe with a pinch-off plier after completion of charging. 6) Braze the end of a pinched charging pipe with copper brazer and take a gas leakage test on the welded parts. 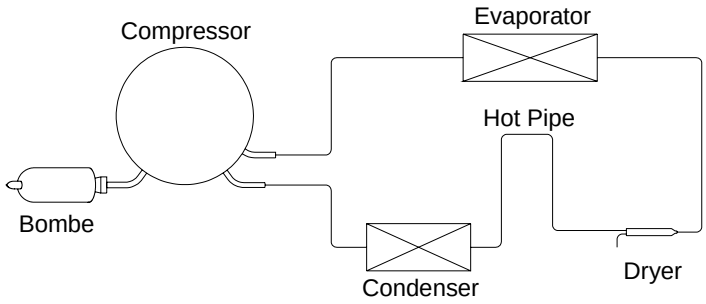
5. Gas-leakage test	* Take a leakage test on the welded or suspicious area with an electronic leakage tester.
6. Pipe arrangement in each cycle	* Check each pipe is placed in its original place before closing a cover back-M/C after completion of work.

10-4. Standard Regulations for Heavy Repair

1) Observe the safety precautions for gas handling.
2) Use JIG (or wet towel) in order to prevent electric wires from burning during welding.
(In order to prevent insulation break and accident.)
3) The inner case shall be melted and insulation material (polyurethane) shall be burnt if not cared during welding inner case parts.
4) The copper pipe shall be oxidized by overheating if not cared during welding.
5) Not allow the aluminum pipes to contact to copper pipes. (In order to prevent corrosion.)
6) Make sure that the inner diameter should not be distorted while cutting a capillary tube.
7) Be sure that a suction pipe and a filling tube should not be substituted each other during welding.
(High efficiency pump.)

10-5. Brazing Reference Drawings.

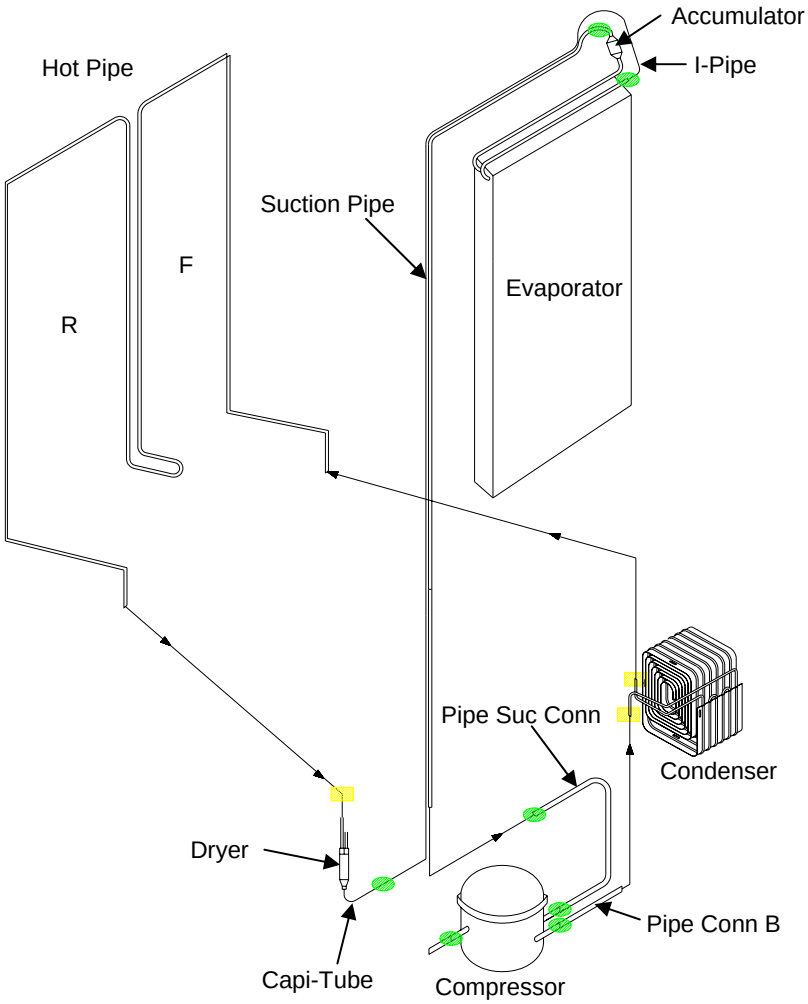

▶ Welding Point

●	Copper Welding (Ag 5%)	7 Points
■	Silver Welding (Ag 35%)	3 Points

▶ Flow of Refrigeration Cycle

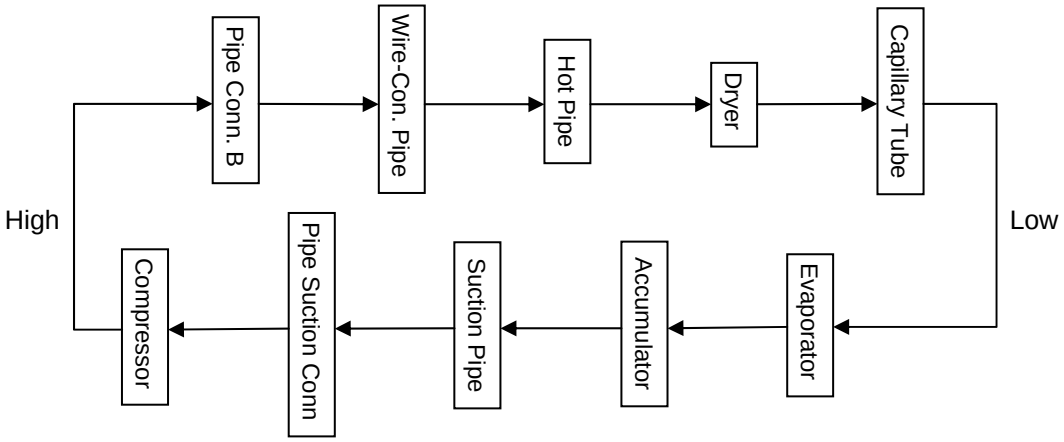

11. INSTALLATION GUIDE

11-1. Installation Preparation

Check if the refrigerator can pass a doorway or enter a door first.

Dimensions(including Door Handles)
(Width*Depth*Height) 903mm X 734.5mm X 1790mm

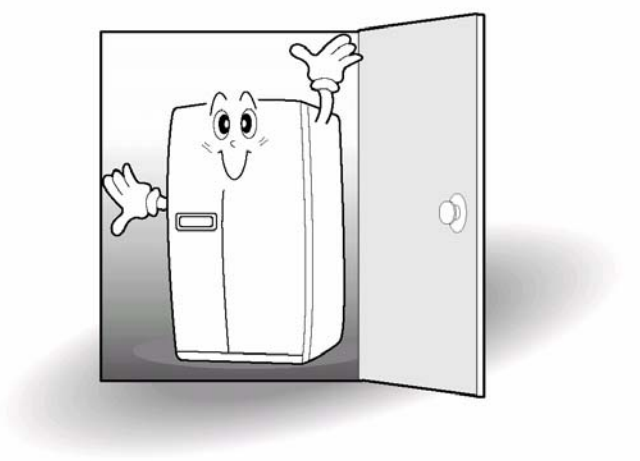

Find a suitable place to install

Sufficient space from refrigerator back to the
※wall for free air ventilation

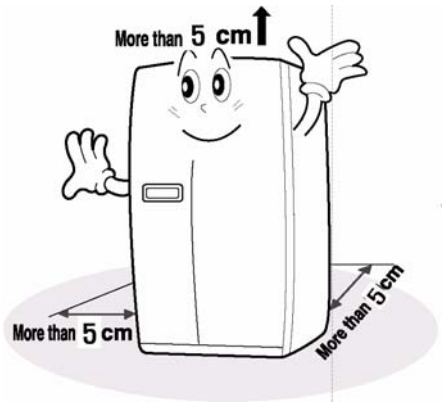

※Avoid direct sunlight.

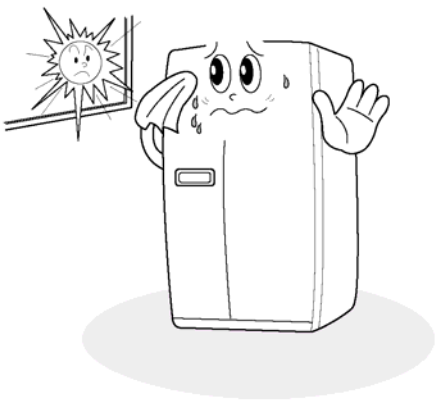

Note

Once the installation place is ready follow the installation instructions.
If surround temperature of refrigerator is low (below 10℃)),
foods can be frozen or the refrigerator can work in abnormal way**.**

11-2. If the refrigerator can not enter the door

Removing Freezer Door

※Remove front bottom cover first, if it is attached.

1 Remove front bottom cover first, Pull out the left collar of the coupling first, then hold the coupling and pull out the left water tube.

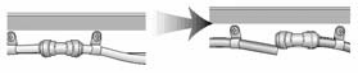

2 Unscrew top hinge cover with a screw driver.
Remove the hinge cover.

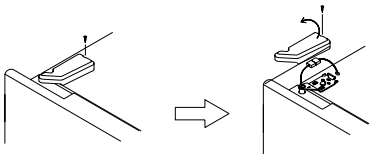

3 Turn top hinge bolt counterclockwise .
Disconnect the harness wires.

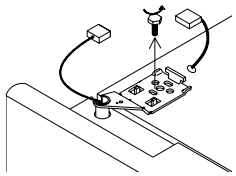

4 Lift up the front of hinge to remove.
(After the hinge is removed the door can fall down forward.
Be careful !)

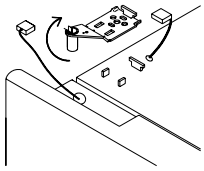

5 Be careful not to damage the water line when removing the door.

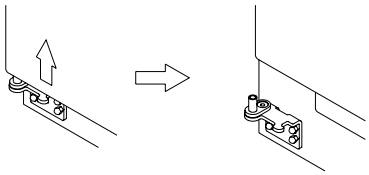

Removing Refrigerator Door

1 Unscrew top hinge cover with a screw driver.
Remove the hinge cover.

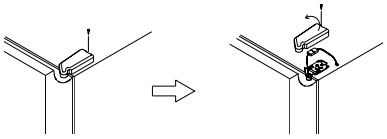

2 Turn top hinge fastener counterclockwise.
Disconnect harness wires.

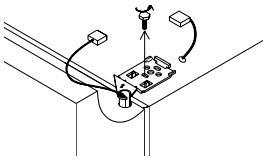

3 Lift up the front of hinge to remove.
(After the hinge is removed the door can fall down forward.
Be careful !)

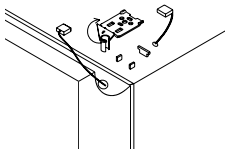

4 Lift the door straight up to remove.

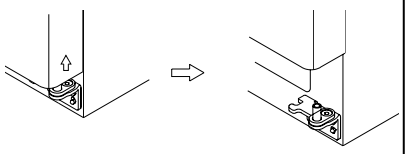

Replacing Freezer Door

1 Insert the water tube into the hole Of the bottom hinge pin first, then Insert the bottom of freezer door Into the bottom hinge pin.

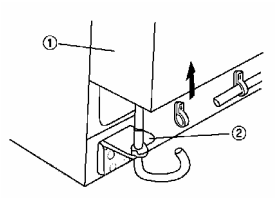

2 Insert the bottom hole of freezer door straight to the bottom hinge pin.

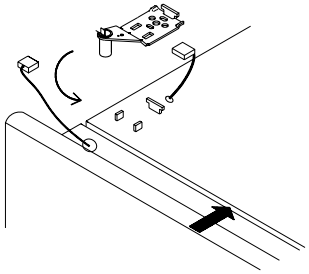

3 Let the top of door close to the cabinet and insert the top hinge pin to the top hole of freezer door.
(Insert the back of hinge to the groove of protrusion first, then front to the top hole of door.)

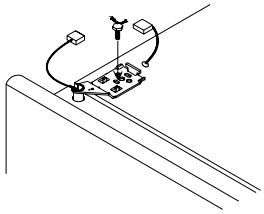

4 Turn the hinge fastener tightly to The end.
Connect harness wire and screw ground wire.

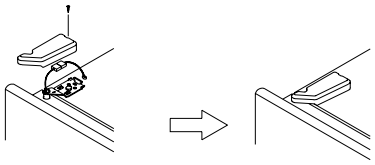

5 Insert the water tube far into the coupling.

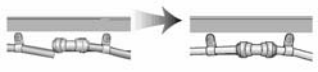

Replacing Refrigerator Door

1 Insert the bottom hole of refrigerator door straight to the bottom hinge pin.

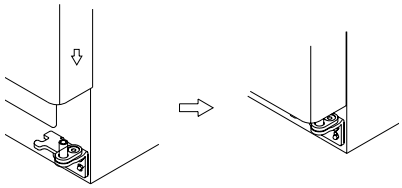

2 Let the top of door close to the cabinet and insert the top hinge pin to the top hole of refrigerator door.
(Insert the back of hinge to the groove of protrusion first, then front to the top hole of door.)

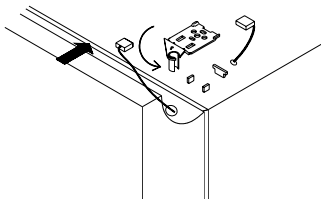

3 Turn the hinge fastener tightly to the end.
Connect harness wirings and screw ground wire.
Click and screw the top hinge cover.

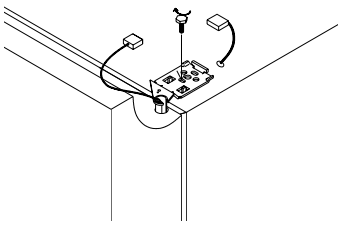

11-3. Refrigerator Leveling & Door Adjustment

※ Refrigerator must be level in order to maintain optimal performance and desirable front appearance.
(If the floor beneath the refrigerator is uneven, freezer and refrigerator doors look unbalanced.)

In case freezer door is lower than refrigerator door

Insert a screw driver (flat tip) into a groove of the left wheel (bottom of freezer) and turn it clockwise until the door is balanced.
(clockwise to raise freezer door ; counterclockwise to lower)

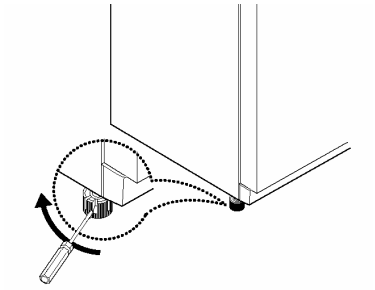

In case refrigerator door is lower than refrigerator door

Insert a screw driver (flat tip) into a groove of the right wheel (bottom of refrigerator) and turn it clockwise until the door is balanced.
(clockwise to raise refrigerator door ; counterclockwise to lower)

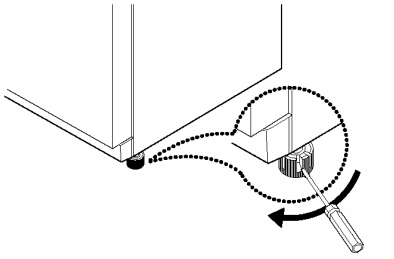

Caution The front of refrigerator needs to be higher just a little than the back for easy door closing, but if the wheel is raised too much for door balance, i.e. front of refrigerator is too higher than the back, it can be difficult to open the door.

11-4. Water Line Installation

How to install Water Line

1.The water pressure should be 3kgf/cm2 or more to run the automatic icemaker.
※Checkup your tap water pressure ; if a cup of 180cc is full within 10 seconds, the pressure is OK.
2.When installing the water tubes, ensure they are not close to Any hot surface.
3.The water filter only “filters” water ; it does not eliminate any bacteria or microbes.
4.If the water pressure is not so high to run the icemaker, call the local plumber to get an additional water pressure pump.
5.The filter life depends on the amount of use. We recommend you replace the filter at least once every 6months.
※When attaching the filter, place it for easy access (removing & replacing)
6.After installation of refrigerator and water line system, select [WATER] on your control panel and press it for 2~3 minutes to supply water into the water tank and dispense water.
7.Use sealing tape to every connection of pipes/tubes to ensure there is no water leak.
8.The water tube should be connected to the cold water line.

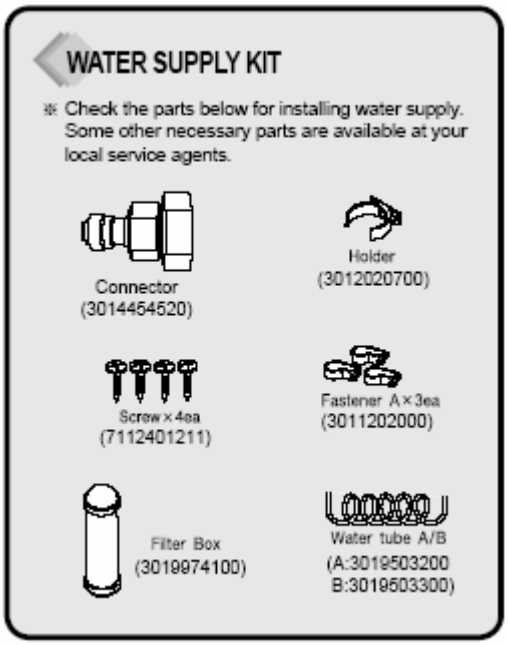

Installation Procedure

1. Join connector to water tap

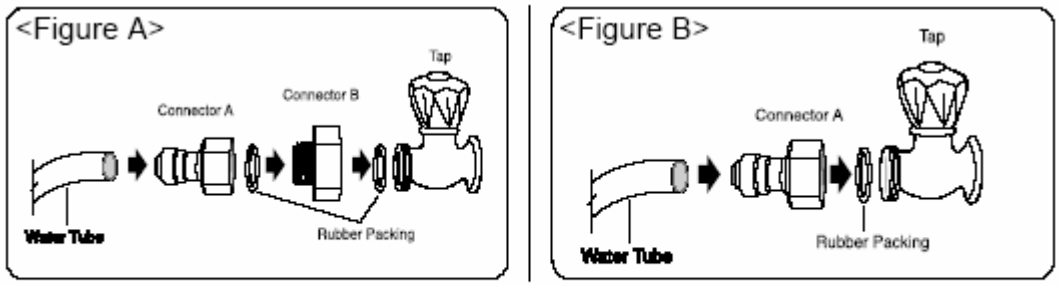

NB Place the rubber washer inside the tap connector and screw onto the water tap.

2. Get ready to install water line

1) Measure an approximate distance between the filter and the Water Tube and cut the tube off filter vertically.
2) Connect the tubes to the filter as the figure shows.

Leave a sufficient distance when cutting the tubes.

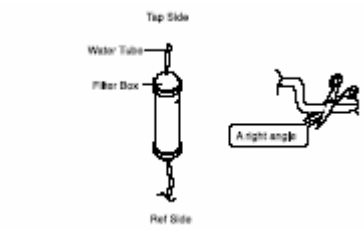

3. Remove any substance from filter

1) Open the main tap water valve and check if water comes out of the Water Tube.
2) Check if the Water Valve is open in case water does not come out.
3) Leave the valve open until clean water is coming out.
※Initial water may contain some substances out of filter (manufacturing process).

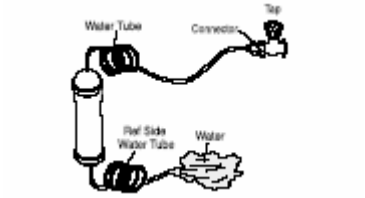

4. Attach the filter box

1)Screw and fasten the filter holder to the left/right side of the back of refrigerator.
※In case the holder is not fastened well, remove the back paper of the tape on the filter holder and attach it.
2)Insert the filter box into the holder.

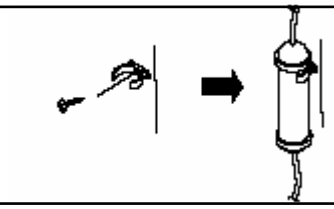

5. Connect water tube

1)Remove the rear cover at the bottom back of the refrigerator.
2)Insert the fastening ring into the Water tube.
(Be careful to follow the direction of the nut.)
3)Insert the Water Tube into the top of Water Valve, turn the nut clockwise to fasten it. (The Water valve is to the right of the motor.)
4)Check for any bent tubes or water leaks; if so, re-check installation procedure.
5)Replace the rear cover. (The Water Tube should be placed between the groove of the refrigerator back and motor cover.)

Set the tube upright as the figure shows.

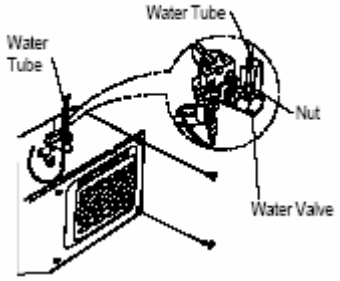

6. Fasten water tube

1) Fasten the Water Tube with the [Fastener A] .
2) Check if the tube is bent or sqeezed. If so, set it right to prevent any water leak.

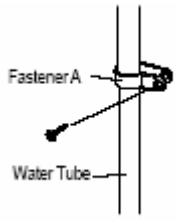

7. After installation

1) Plug the refrigerator, press the [WATER] button on the control panel for 2~3 minutes to remove any air (bubble) in the pipes and drain out the initial water.
2) Check the water leak again through the water supply system (tubes, connectors and pipes) Rearrange the tubes again and do not move the refrigerator.

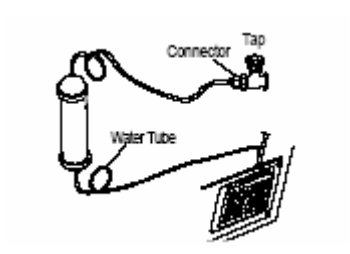

11-5. Dispenser Water Flow

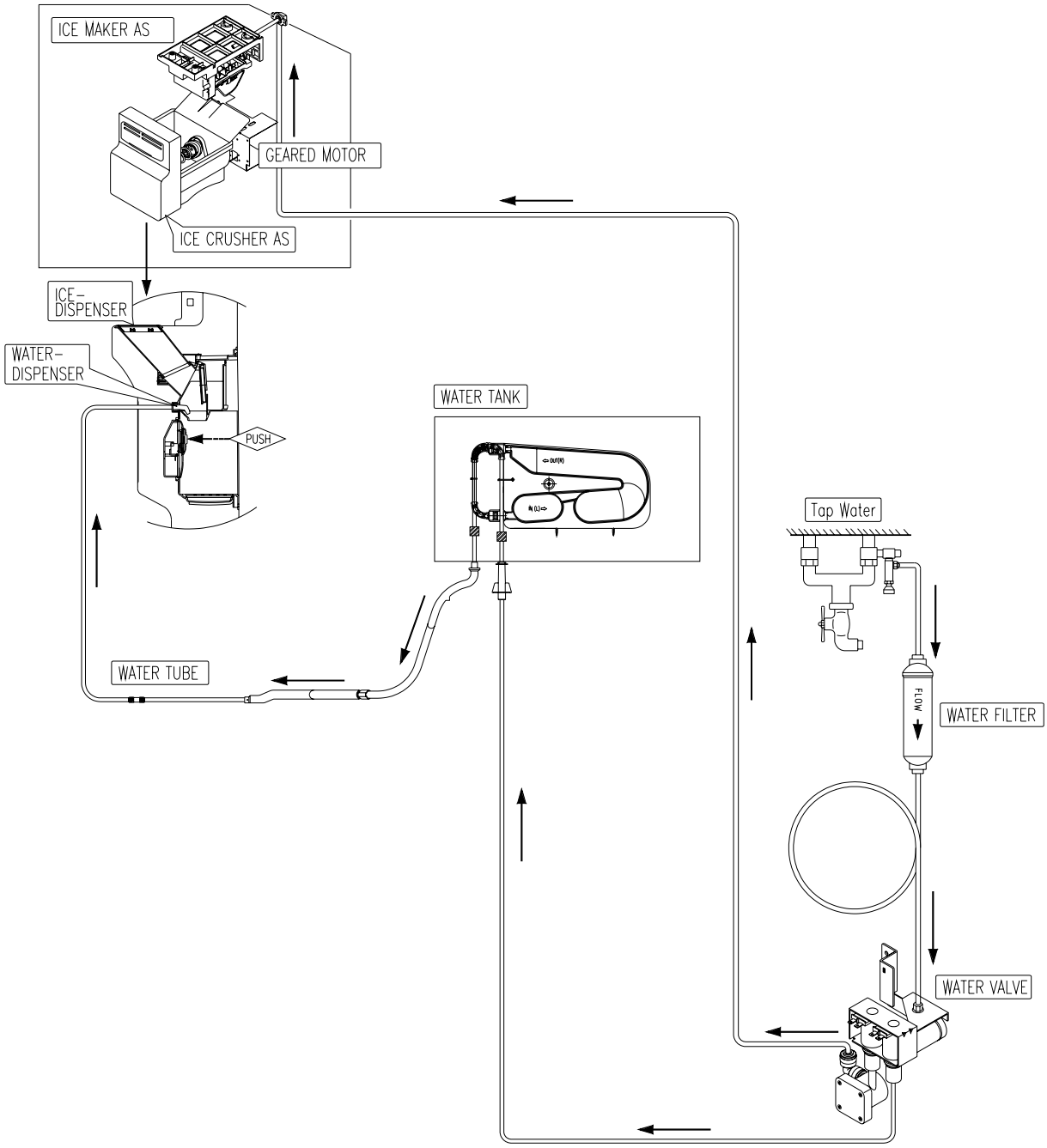

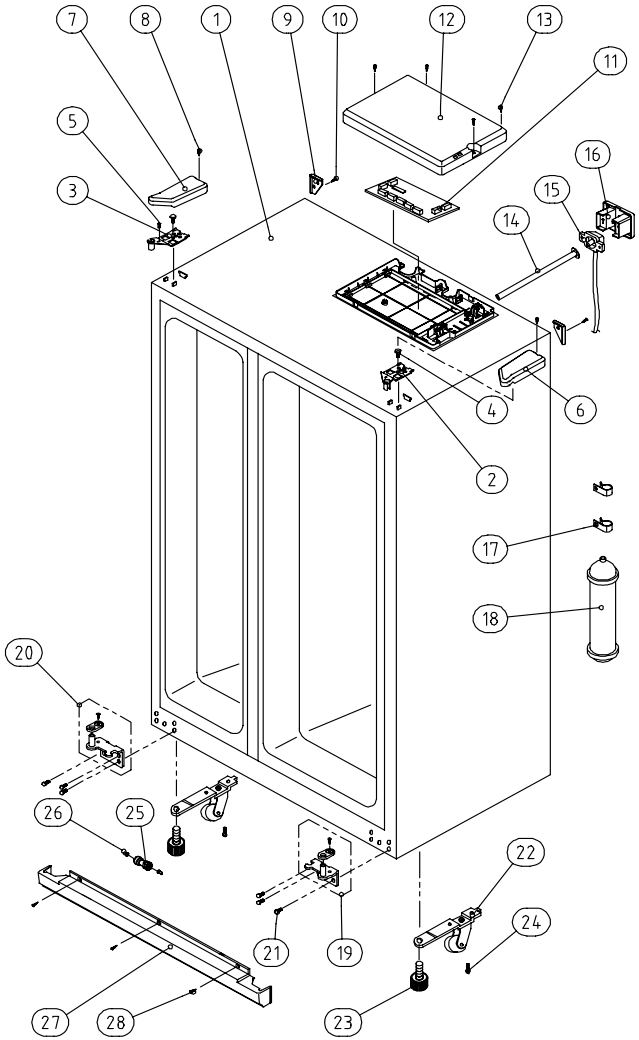

NO	PART-CODE	PART NAME	SPEC.	Q'ty				
				20IB	20DB	20EB	20FB	20GB
1		ASSY CAB URT		1	1	1	1	1
2	3012924400	HINGE *T *R AS	PO T3.0+PAINT	1	1	1	1	1
3	3012924300	HINGE *T *L AS	PO T3.0+PAINT	1	1	1	1	1
4	3016042300	SPECIAL *T HI BOLT	6X13 SWCH18A	2	2	2	2	2
5	7051401065	SCREW MACHINE	PAN 4X10 SW BSNI	1	1	1	1	1
6	3011446200	COVER *T HI *R	PP	1	1	1	1	1
7	3011446100	COVER *T HI *L	PP	1	1	1	1	1
8	7112401211	SCREW TAPPING	T1 TRS 4X12 MFZN	2	2	2	2	2
9	3010968400	CAP CAB COVER	PP	2	2	2	2	2
10	7112401211	SCREW TAPPING	T1 TRS 4X12 MFZN	2	2	2	2	2
11	30143D6061	PCB MAIN AS	FRU-571I (R-134a)	1	-			
	30143D5072	PCB MAIN AS	FRU-541F (R-134a)	-	1	1	1	1
12	3011446000	COVER MAIN PCB BOX	PP(V-235)	1	1	1	1	1
13	7112401211	SCREW TAPPING	T1 TRS 4X12 MFZN	4	4	4	4	4
14	3013224800	HOSE ICE MAKER TUBE AS	FRU-541D	-	1	1	1	1
15	3012530200	GUIDE CAB W/TUBE A AS	FRU-541D		1	1	1	1
16	3011444100	COVER GUIDE CAB W/T A	HIPS		1	1	1	1
17	3011202000	CLAMP WATER TUBE A	PA-66, 5N		2	2	2	2
18	3019974800	S/PAER FILTER WATER AS	FR-S660CW		1	1	1	1
19	3012924000	HINGE *U *R AS	P/O T5.0 + PAINT	1	1	1	1	1
20	3012923900	HINGE *U *L AS	P/O T5.0 + PAINT	1	1	1	1	1
21	3016001240	SPECIAL BOLT *T	6X22 SWCH22A(YL)	6	6	6	6	6
22	3010657200	BRACKET ADJ FOOT	SPCC T3.0	2	2	2	2	2
23	3012105100	FOOT ADJ AS	PP	2	2	2	2	2
24	3016001240	SPECIAL BOLT *T	6X22 SWCH22A(YL)	2	2	2	2	2
25	3013064200	HOLDER TUBE A	ACETAL	1	1	1	1	1
26	3012019500	FIXTURE TUBE FIT B	PP	2	2	2	2	2
27	3011447200	COVER CAB BRKT	PP	1	1	1	1	1
28	7142401511	SCREW TAPPING	T2 TRS 4X16 MFZN	3	3	3	3	3

- ***Some parts can be chaged for improving their perfomance without notice.***
- ***Above parts number doesn't describe your own colour & printing. Please remind!***

Date	Amendment Note

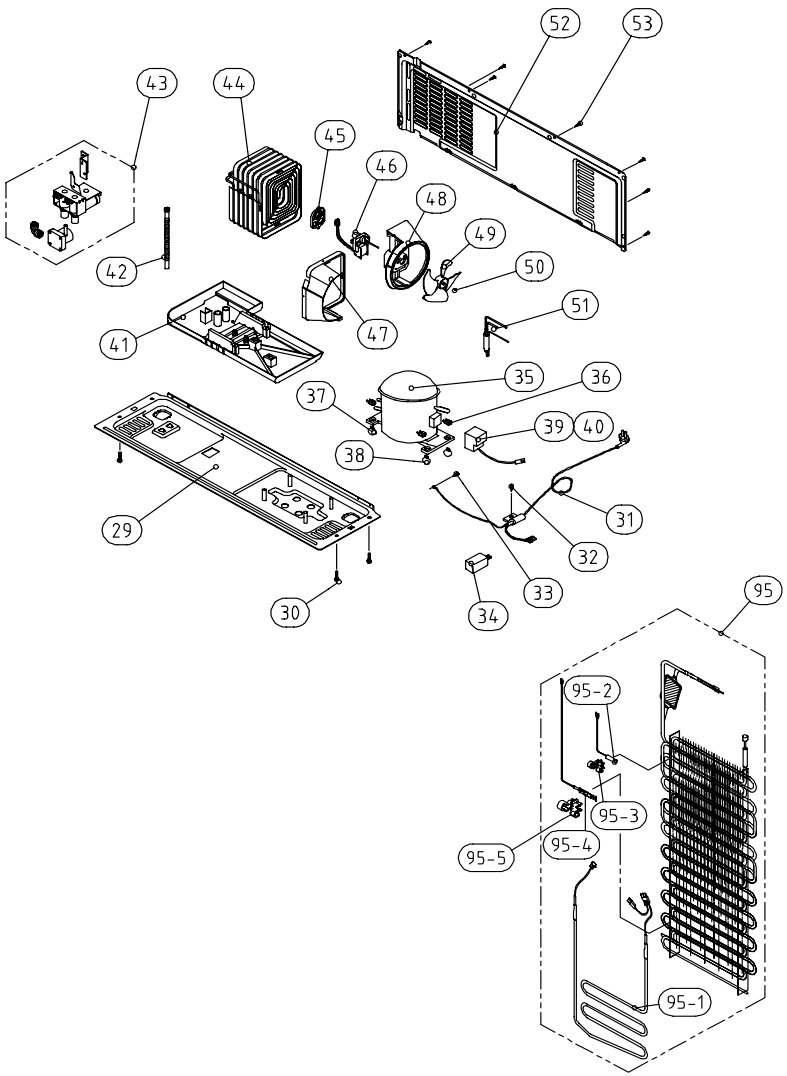

NO	PART-CODE	PART NAME	SPEC.	Q'ty				
				20IB	20DB	20EB	20FB	20GB
29	3010340400	BASE COMP AS	FRU-571I	1	1	1	1	1
30	3016003300	SPEICAL BOLT	T2 M6.5X20	4	4	4	4	4
31		CORD POWER AS		1	1	1	1	1
32	7112401211	SCREW TAPPING	T1 TRS 4X12 MFZN	1	1	1	1	1
33	7051401065	SCREW MACHINE	PAN 4X10 SW BSNI	1	1	1	1	1
34		CAPACITOR RUN	Model dependent	1	1	1	1	1
35		COMP	Model dependent	1	1	1	1	1
36	3016002500	SPECIAL WASHER	SK-5, T0.8	4	4	4	4	4
37	3010101600	RUBBER ABSORBER COMP	NBR	2	2	2	2	2
38	3010101480	ABSORBER COMP AS	FRU-541D	2	2	2	2	2
39		SWITCH P RELAY AS	Model dependent	1	1	1	1	1
40		COVER RELAY	Model dependent	1	1	1	1	1
41	3011181300	CASE VAPORI AS	PP	1	1	1	1	1
42	3013201710	HOSE DRN B	PE FRB-5350NT	1	1	1	1	1
43	3015402800	VALVE WATER AS	110~127V 60Hz	-	1	1	1	1
	3015402300		220~240V 50,60Hz					
44	3014461510	PIPE WICON AS	TSW OD4.76XT0.7	1	1	1	1	1
45	3012021700	FIXTURE MOTR	PP	1	1	1	1	1
46	3015916100	MOTOR C FAN AS	DC-2213DWCA-3	1	1	1	1	1
47	3018500300	M/BELL B	PP	1	1	1	1	1
48	3018500200	M/BELL A	PP	1	1	1	1	1
49	3011834700	FAN	ABS OD3.17XD150	1	1	1	1	1
50	3011200500	CLAMP FAN	SUS 304	1	1	1	1	1
51	3016808100	DRYER AS	C1220T	1	1	1	1	1
52	3011497000	COVER MACH ROOM AS	SBHG T0.35	1	1	1	1	1
53	7112401211	SCREW TAPPING	T1 TRS 4X12 MFZN	7	7	7	7	7

95	3017053500	EVA AS	FRU-571I	1	1	1	1	1
95-1	3012818300	HEATER SHEATH AS	AC220V/ 192W	1	1	1	1	1
	3012818400		AC115V/ 192W					
95-2	3014806900	SENSOR D AS	PBN-43	1	1	1	1	1
95-3	3012023600	FIXTURE D SENS	PP	1	1	1	1	1
95-4	301720200	FUSE TEMP AS	AC250V 10A 77C	1	1	1	1	1
95-5	4017Z90590	FIXTURE FUSE TEMP	PP	1	1	1	1	1

- ***Some parts can be chaged for improving their perfomance without notice.***
- ***Above parts number doesn't describe your own colour & printing. Please remind!***

Date	Amendment Note

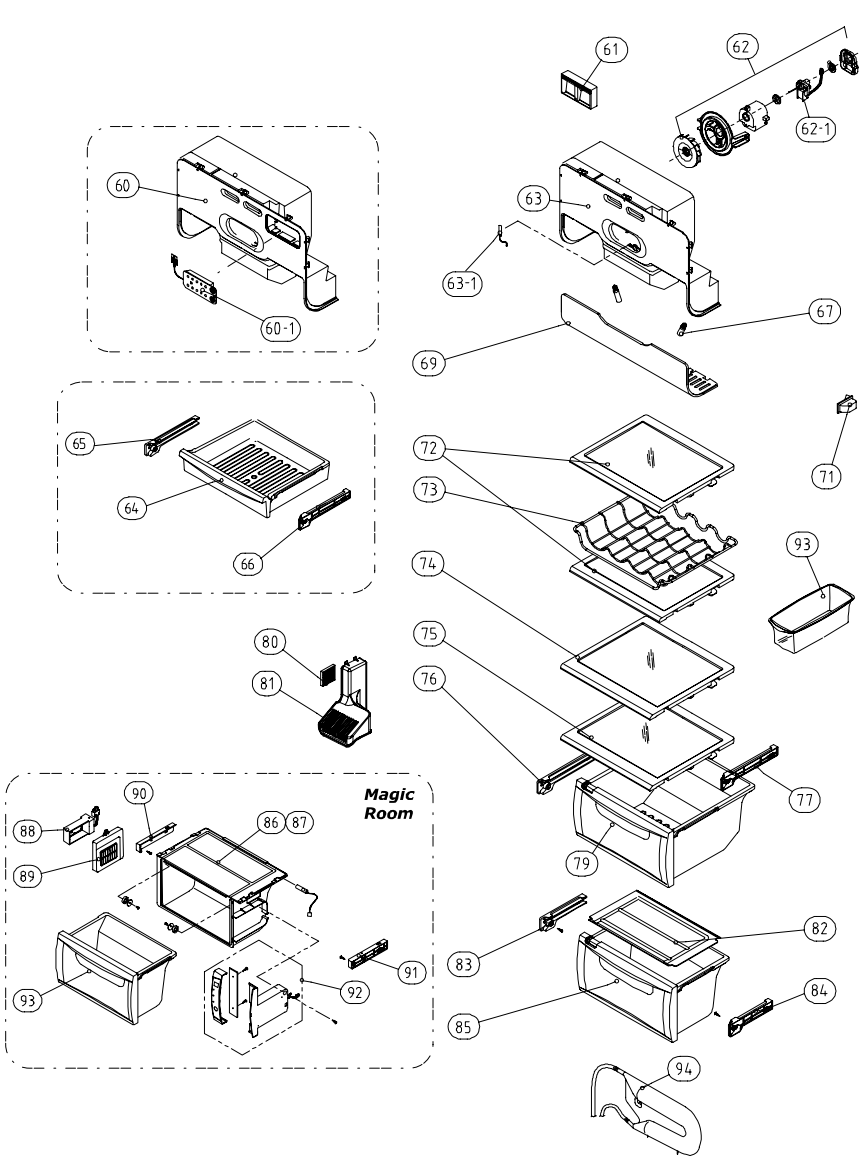

NO	PART-CODE	PART NAME	SPEC.	Q'ty				
				20IB	20DB	20EB	20FB	20GB
60	3011492810	COVER DAMP AS	FRU-571I	1				
60-1	3014235200	PANEL CONTL *I AS		1		-		
61	3012214100	FRAME CHECK VALVE AS	FRU-571I	1	1	1	1	1
62	3012024200	FIXTURE MOTR AS		1	1	1	1	1
62-1	3015916000	MOTOR R FAN	D4612AAA20	1	1	1	1	1
63	3011495100	COVER DAMP AS	FRU-541D	-	1	1	1	1
63-1	3014807100	SENSOR R AS	PBN-43B	1	1	1	1	1
64	3012514500	GUIDE CASE A *L AS	ABS	1				
65	3011185740	CASE CHILD	GPPS(CRYSTAL)	1		-		
66	3012514600	GUDIE CASE A *R AS	ABS	1				
67	3013602500	LAMP F/R	AC 240V 25W(S)	2	2	2	2	2
	3013602800		AC 125V 25W					
69	3015510800	WINDOW R LAMP	MIPS	1	1	1	1	1
71	3018124000	SWITCH DR	SP201R-7DR (R-134a)	1	1	1	1	1
72	3017842810	SHELF R A AS	NUDE GLASS	2		-		
	3017842800		PRINTED GLASS	-	2	2	2	2
73	3017844220	SHELF WINE	FRU-54,57 SUS304	Option				
74	3017843300	SHELF R C AS	NUDE GLASS	1		-		
	3017843310		PRINTED GLASS	-	1	1	1	1
75	3017842910	SHELF R B AS	NUDE GLASS	1		-		
	3017842900		PRINTED GLASS	-	1	1	1	1
76	3012514500	GUIDE CASE A *L AS	ABS	1	1	1	1	1
77	3012514600	GUDIE CASE A *R AS	ABS	1	1	1	1	1
79	3011114630	CASE VEGETB B AS	NANO	1	1	1	1	1
80	3018701800	DEO ANTI AS	W40XT5XL40	1	1	1	1	1
81	3011445900	COVER RETURN DUCT	PP	1	1	1	1	1
82	3011446700	COVER VEGETB CASE B	GPPS	1	1		1	
83	3012529700	GUIDE CASE C *L AS	ABS	1	1	-	1	-
84	3012529800	GUIDE CASE C *R AS	ABS	1	1		1	
85	3011114730	CASE VEGETB C AS	NANO	1	1		1	
86	3011446800	COVER CHANGE RM	GPPS			1		1
87	3010548200	BOX CHANGE RM	HIPS			1		1
88	3016767100	DAMPER AS	DU24-012			1		1
89	3011450901	COVER DUCT CH RM AS	PP+SEAL	-	-	1	-	1
90	3012529500	GUDIE CHANGE RM *L	ABS			1		1
91	3012529600	GUDIE CHANGE RM *R	ABS			1		1
92	3010551000	BOX CONTL CH RM AS				1		1
93	3011115040	CASE CHANGE RM AS	FRU-547E, CASE+FRAME			1		1
93	3011170050	CASE EGG AS	CASE+TRAY+VINYL	1	1	1	1	1
94	3018201000	TANK WATER AS	FRU-541D	-	1	1	1	1

- ***Some parts can be chaged for improving their perfomance without notice.***
- ***Above parts number doesn't describe your own colour & printing. Please remind!***

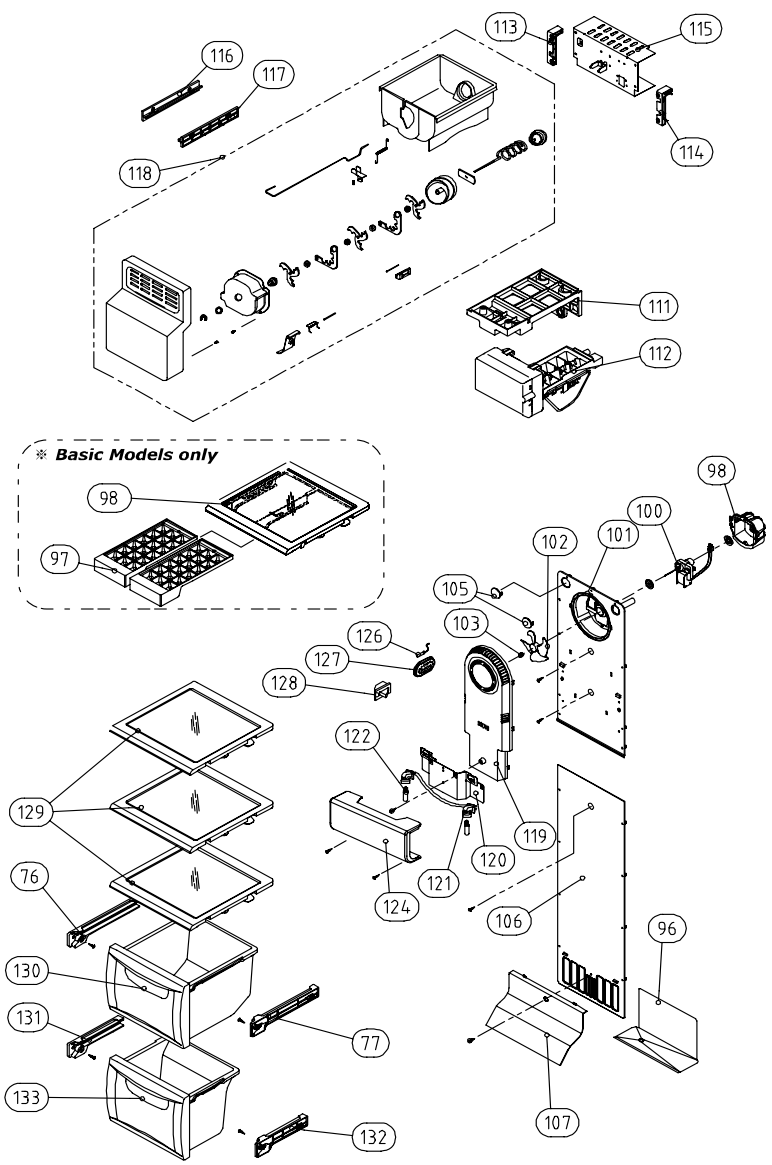

NO	PART-CODE	PART NAME	SPEC.	Q'ty				
				20IB	20DB	20EB	20FB	20GB
76	3012514500	GUIDE CASE A *L AS	ABS	1	1	1	1	1
77	3012514600	GUDIE CASE A *R AS	ABS	1	1	1	1	1
96	3012529000	GUIDE DRN	GA	1	1	1	1	1
97	3017842700	SHELF F ICE AS	NUDE GLASS	1	-			
98	3011186300	CASE ICE	PP	1				
100	3015915900	MOTOR F FAN	D4612AAA21	1	1	1	1	1
101	3018921300	LOUVER F A	ABS	1	1	1	1	1
102	3011834500	FAN	ABS OD3.17XD130	1	1	1	1	1
103	3011200510	CLAMP FAN	SUS 304	1	1	1	1	1
105	3010968600	CAP F LOUVER B	HIPS	2	2	2	2	2
106	3018921500	LOUVER F B AS	HIPS	1	1	1	1	1
107	3011443200	COVER F RETURN	HIPS	1	1	1	1	1
111	3012205600	FRAME ICE MAKER	HIPS	-	1	1	1	1
112	3000025910	CASE I/MAKER AS	FRU-541D		1	1	1	1
113	3012517800	GUIDE G/MOTR BRKT *L	ABS		1	1	1	1
114	3012517900	GUIDE G/MOTR BRKT *R	ABS		1	1	1	1
115	3010656500	BRACKET GEARED MOTR AS	120V/60Hz		1	1	1	1
	3010658110		220~240/50Hz					
116	3012520510	GUIDE ICE CRUSHER *L	ABS		1	1	1	1
117	3012517710	GUIDE ICE CRUSHER *R	ABS		1	1	1	1
118	3011115202	CASE I/CRUSHER AS	FRU-541D		1	1	1	1
119	3001401701	COVER F FAN AS	FRU-571I	1	-			
	3001401711	COVER F FAN AS	FRU-541D	-	1	1	1	1
120	3014531900	PLATE F LAMP	SGCC T0.8	1	1	1	1	1
121	3017906600	SOCKET F LAMP AS	FRU-571I	1	1	1	1	1
122	3013602500	LAMP F/R	AC 240V 25W(S)	2	2	2	2	2
	3013602800		AC 125V 25W					
124	3015510700	WINDOW F LAMP	MIPS	1	1	1	1	1
126	3014807000	SENSOR F AS	PT-38	1	1	1	1	1
127	3011442600	COVER F SENS	ABS	1	1	1	1	1
128	3018124010	SWITCH DR	SP201R-7DL (R-134a)	1	1	1	1	1
129	3017842610	SHELF F AS	NUDE GLASS	3	-			
	3017842600	SHELF F AS	PRINTED GLASS	-	3	3	3	3
130	3011114800	CASE F A AS	NANO	1	1	1	1	1
131	3012529700	GUIDE CASE C *L AS	ABS	1	1	1	1	1
132	3012529800	GUIDE CASE C *R AS	ABS	1	1	1	1	1
133	3011114900	CASE F B AS	NANO	1	1	1	1	1

- ***Some parts can be chaged for improving their perfomance without notice.***
- ***Above parts number doesn't describe your own colour & printing. Please remind!***

※ **Basic Model**

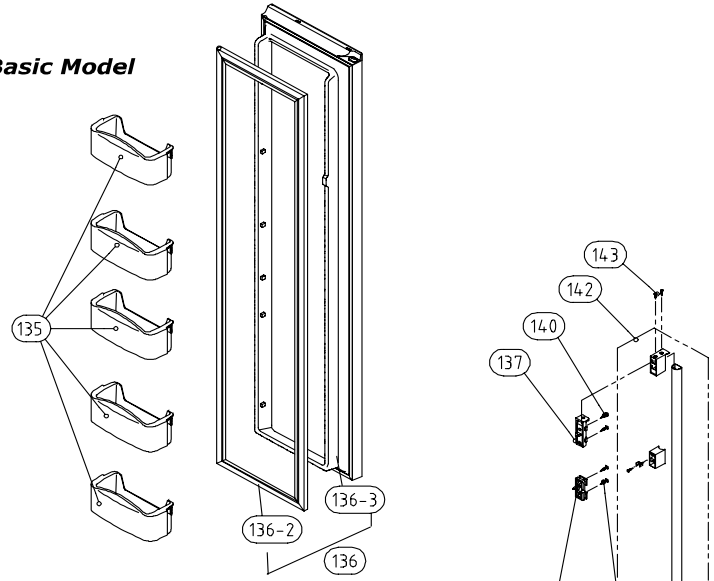

※ **Dispenser Model**

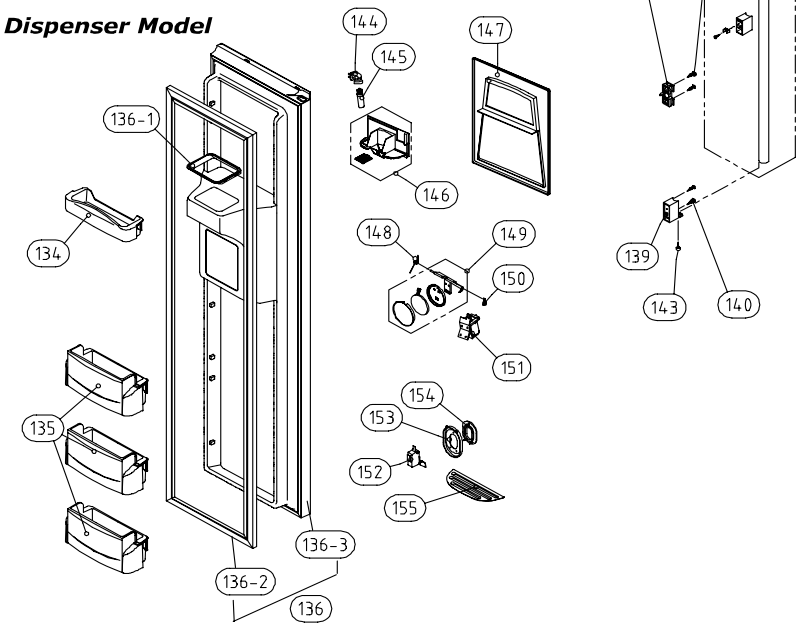

NO	PART-CODE	PART NAME	SPEC.	Q'ty				
				20IB	20DB	20EB	20FB	20GB
134	3019026700	POCKET F *T	HIPS	1	1	1	1	1
135	3019027401	POCKET F AS	FRU-541D	-	3	3	3	3
	3019026600	POCKET F	FRU-571I	5	-			
136	3000067600	ASSY F DR	FRU-547E, SUS	-	1	1	1	1
	3000067610	ASSY F DR	FRU-577I, SUS	1	-			
136-1	3010964600	CAP ICE PATH FRAME	HIPS	-	1	1	1	1
136-2	3012318800	GASKET F DR AS	PVC	1	1	1	1	1
136-3	3000057940	ASSY F DR URT	FRU-547F	-	1	1	1	1
	3000057930	ASSY F DR URT	FRU-577I	1	-			
137	3012027200	FIXTURE HNDL SUPORT *T	HIPS	1	1	1	1	1
138	3012018700	FIXTURE HNDL SUPORT *M	HIPS	2	2	2	2	2
139	3015311500	SUPPORTER HNDL *U	ABS+SPRAY	1	1	1	1	1
140	7002401011	SCREW MACHINE	TRS 4X10 MFZN	4	4	4	4	4
141	3016040100	SPECIAL SCREW HNDL	M5X20	4	4	4	4	4
142	3012645300	HANDLE BAR AS	FRU-577/547	1	1	1	1	1
143	3016040200	SPECIAL SCREW FRAME	4X14, S18C	2	2	2	2	2
144	3017903702	SOCKET DISP LAMP AS	250V 1A 14BASE	-	1	1	1	1
145	3013600020	LAMP AS	240V/15W		1	1	1	1
	3013600050		110V/15W					
146	3010544000	BOX DISPNS ICE SHUT AS	FRU-541D		1	1	1	1
147	3011494700	COVER DISPNS BOX AS	FRU-541D		1	1	1	1
148	3015102200	SPRING ICE D/LEVER	SUS		1	1	1	1
149	3011495300	COVER ICE FLAP AS	FRU-541D		1	1	1	1
150	3012019700	FIXTURE ICE SHUT LVR	SUS		1	1	1	1
151	3015404100	VALVE SOL DISP	110~115V/60Hz		1	1	1	1
	3015403200	VALVE SOL DISP	230V/50Hz					
152	3018125800	SWITCH MICRO	VP333A-2D		1	1	1	1
153	3012213200	FRAME DISPNS BUTTON	ABS		1	1	1	1
154	3016304600	BUTTON DISPNS	SILICON		1	1	1	1
155	3012406900	GRILL DISPENSER	ABS		1	1	1	1

- ***Some parts can be chaged for improving their perfomance without notice.***
- ***Above parts number doesn't describe your own colour & printing. Please remind!***

Date	Amendment Note

※ **Basic Model**
(20IB, 20DB, 20EB)

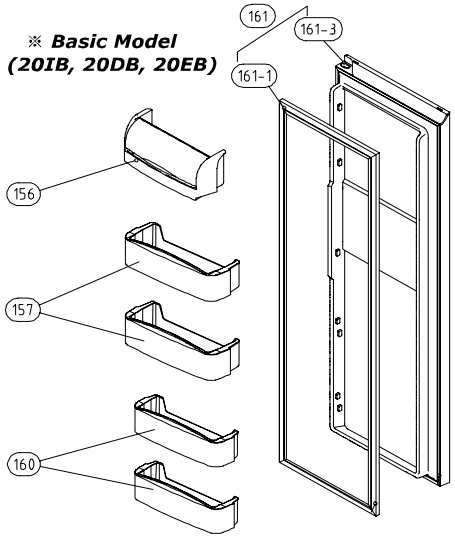

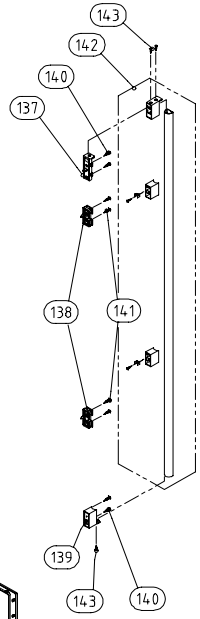

※ **Homebar Model**
(20FB, 20GB)

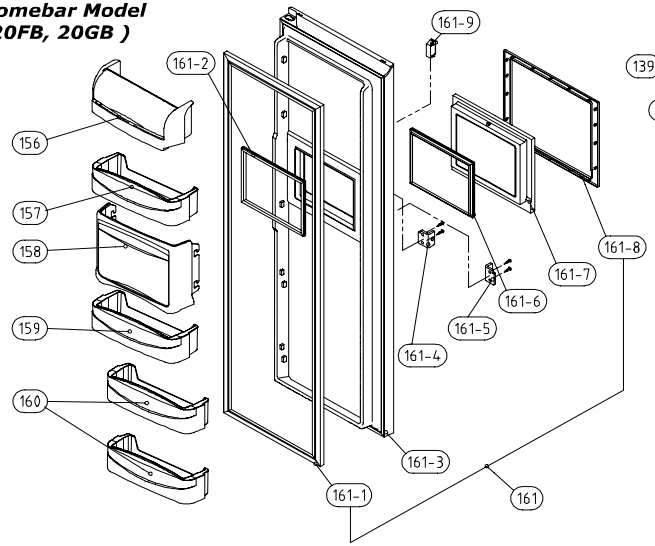

NO	PART-CODE	PART NAME	SPEC.	Q'ty				
				20IB	20DB	20EB	20FB	20GB
137	**3012027200**	FIXTURE HNDL SUPORT *T	HIPS	1	1	1	1	1
138	**3012018700**	FIXTURE HNDL SUPORT *M	HIPS	2	2	2	2	2
139	**3015311500**	SUPPORTER HNDL *U	ABS+SPRAY	1	1	1	1	1
140	**7002401011**	SCREW MACHINE	TRS 4X10 MFZN	4	4	4	4	4
141	**3016040100**	SPECIAL SCREW HNDL	M5X20	4	4	4	4	4
142	**3012645300**	HANDLE BAR AS	FRU-577/547	1	1	1	1	1
143	**3016040200**	SPECIAL SCREW FRAME	4X14, S18C	2	2	2	2	2
156	**3019027500**	POCKET DAIRY AS	FRU-571I	1	1	1	1	1
157	**3019027200**	POCKET R *M AS	FRU-541D	-	2	2	1	1
	3019026800	POCKET R	FRU-571I	2	-			
158	**3011187000**	CASE H/BAR AS	FRU-541F	-			1	1
159	**3019027700**	POCKET R H/BAR AS	FRU-541F				1	1
160	**3019027300**	POCKET R *S AS	FRU-541D	-	2	2	2	2
	3019026900	POCKET R *S	FRU-571I	2	-			
161	**3000067700**	ASSY R DR	FRU-547F, SUS	-			1	1
	3000067710	ASSY R DR	FRU-571I, SUS	1	1	1	-	
161-1	**3012318900**	GASKET R DR AS	PVC	1	1	1	1	1
161-2	**3012319300**	GASKET H/BAR B AS	PVC	-			1	1
161-3	**3000058050**	ASSY R DR URT	FRU-547F				1	1
	3000058060	ASSY R DR URT	FRU-577I	1	1	1	-	
161-4	**3015204500**	STOPPER H/BAR DR *R	PO T4.0	-			1	1
161-5	**3015204400**	STOPPER H/BAR DR *L	PO T4.0				1	1
161-6	**3012319400**	GASKET H/BAR A AS	PVC				1	1
161-7	**3011765000**	DOOR H/BAR URT AS	FRU-541F				1	1
161-8	**3011497200**	COVER FRAME H/BAR	ABS				1	1
161-9	**3018125600**	SWITCH H/BAR DR AS	SP101B-2D1(T)				1	1

- ***Some parts can be chaged for improving their perfomance without notice.***
- ***Above parts number doesn't describe your own colour & printing. Please remind!***

Date	***A*** *mendment Note*

Reference

1. Electric Device

Compressor		Capacitor Run		Switch P Relay AS		Remark
Specification	Part Code	Specification	Part Code	Specification	Part Code	
HPL30YG-5	395S130R50	400VAC/ 5㎌	3016401920	308NHB, S330	3018129810	220~240V/50Hz
MK183Q-L2U	3956183D50	350VAC/ 5㎌	3016401170	265RHB, S330	3018129600	220~240V/50Hz
MK183C-L2U	3956183D10	250VAC/ 12㎌	3016405000	445PHB, 4R7M	3018129610	110`115V/60Hz
MK4A5Q-R1U	3956145250	350VAC/ 5㎌	3016401170	265RHB, S330	3018129600	220~240V/50Hz(R-600a)

2. Power Cord

Shape	Description	Part Code	Shape	Description	Part Code
	CP-2PIN	3011304100		KP-550 (China)	3011301070
	CP-2PIN(Ferrite)	3011346701		KP-550 (Australia)	3011301080
	KP-30	3011348300		MP5004 (SINGAPORE)	3011302870
	KP-211				
	SA16A (South Africa)	3011302170			
	BS-1363 (U.K)	3011347300			