# Service Manual

## SBSSERIES

| Applicable Models | Model Code | Applicable Models |
|---|---|---|
| HC-957WEN | UR-BCD746WE-DT | 22031050000741 |
| | | |
| | | |

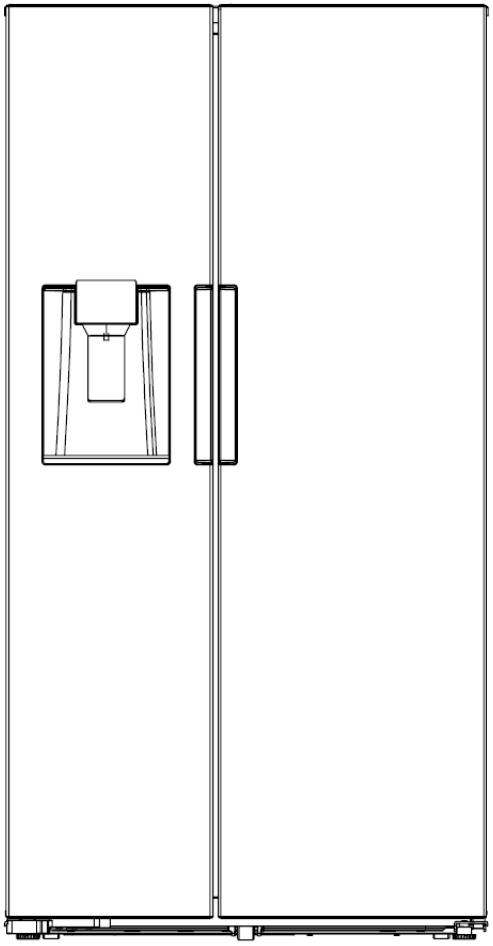

The picture in this service manual is only for reference, and specific appearance and configuration are subject to the real product.
This manual mainly teaches the method, the specific work skill needs engineer to accumulate through the daily work.

## ⚠ WARNING

### Important Safety Notice

There are special components used in this equipment which are important for safety. These parts are marked by ⚠ in the Schematic Diagrams, Circuit Board Diagrams, Exploded Views and Replacement Parts List. It is essential that these critical parts should be replaced with manufacturer's specified parts to prevent shock, fire or other hazards. Do not modify the original design without permission of manufacturer.

## ⚠ WARNING

### Important Safety Notice

The Maintenance Manual is only for the use of maintenance personnel with certain experience and background in electrical, electronic and mechanical field.

Any attempt to repair main devices may lead to personal injury and property loss.

Manufacturers or distributors are not responsible for the content of the Manual and interpretation thereof.

**Midea Refrigerators**

Technical Maintenance Manual

Copyright @2017

All rights reserved. Replication of all or part of the Manual in any forms shall not be allowed without written approval by the Overseas Sales Corporation of Midea Refrigerators.

# Contents


**1. SIGNIFICANT UPDATE NOTES(NONE) ..... 5**

**2. SAFETY WARNING CODE ..... 6**

2.1 WARNING FOR OPERATION SAFETY ..... 6
2.2 SAFETY INSTRUCTION FOR REFRIGERANT ..... 8

**3. TRANSPORT ..... 9**

3.1HANDLING ..... 9

**4. INSTALLATION AND COMMISSIONING ..... 10**

4.1DOOR DISASSEMBLY AND ASSEMBLY ..... 10
4.2INSTALLATION LOCATION ..... 13
4.3LEVELING OF THE REFRIGERATOR ..... 13
4.4LEFT OR RIGHT OPEN DOOR REVERSAL(NONE) ..... 14
4.5INSTALLATION OF HANDLE(NONE) ..... 14
4.6INSTALLATION OF DOOR LOCK（NONE） ..... 14
4.7ADJUSTMENT TO LEVEL THE DOOR ..... 14

**5. PRODUCT CONFIGURATION AND DIMENSION ..... 16**

5.1 MAIN PARTS AND THEIR NAMES ..... 16
5.2 EXTERNAL DIMENSION ..... 17
5.3LOCATION OF S/N ..... 18

**6. PRODUCT SPECIFICATION ..... 19**

6.1ELECTRICAL PARAMETERS ..... 19
6.2COOLING TEMPERATURE SETTING RANGE ..... 20
6.3DEFROSTING PARTS ..... 20
6.4CIRCUIT DIAGRAM ..... 20
6.5MAIN CONTROL BOARD STRUCTURE DIAGRAM ..... 20
6.5.1 ICE MAKER CONTROL BOARD STRUCTURE DIAGRAM ..... 21
6.6ELECTRIC EXCHANGE VALVE (NONE) ..... 21
6.7WATER VALVE ..... 22

**7.REFRIGERATING PIPING SYSTEM AND CIRCULATING ROUTE OF COOLING AIR ..... 23**

7.1 REFRIGERATING PIPING SYSTEM ..... 23
7.2SPECIAL SOLDERING POSITION (NONE) ..... 23
7.3CIRCULATING ROUTE OF COOLING AIR ..... 24

**8. DISMANTLING OF PARTS ..... 25**

8.1 PARTS ON THE DOOR ..... 25
8.2PARTS INSIDE THE REFRIGERATOR ..... 25
8.3 LIGHT SYSTEM ..... 26
8.4 AIR DUCT COMPONENTS IN REFRIGERATING CHAMBER AND FAN MOTOR ..... 27
8.5 AIR DUCT COMPONENTS IN FREEZING CHAMBER AND FAN MOTOR ..... 28

8.6 EVAPORATOR AND DEFROST SYSTEM ..... 30
8.7 COMPRESSOR CASE ..... 31
8.8 DISPLAY CONTROL BOARD ..... 36
8.9 MAIN CONTROL BOARD ..... 37
8.10 BAR COUNTER(NONE) ..... 37
8.11 WATER DISPENSER ..... 37
8.12ICE MAKER ..... 38
8.13WATER FILTER COMPONENT ..... 39

**9.TEMPERATURE SENSING SYSTEM ..... 41**

9.1 POSITION OF SENSORS ..... 41
9.2 REPLACEMENT OF SENSORS ..... 41
9.3SENSOR REPLACEMENT ..... 43
9.4SENSOR RESISTANCE(R/T) ..... 44

**10. FUNCTION AND OPERATION ..... 45**

10.1 OPERATION PANEL ..... 45
10.2 DISPLAY ..... 45
10.3TEMPERATURE CONTROL ..... 46
10.4 OPEN DOOR ALARM ..... 46
10.5FUNCTION SELECTION ..... 46
10.6CONTROL OF ICE MAKER ..... 47
10.7 CELSIUS FAHRENHEIT CONVERSION ..... 47
10.8FAULT CODE AND SOLUTIONS ..... 47
10.9DEFROSTING FUNCTION ..... 50
10.10 EYE ICE MACHINE TEST MODE ..... 50
10.11BACKUP DATA FOR POWER FAIL ..... 50

**11. COMPRESSOR ..... 51**

11.1COMPRESSOR ON AND OFF CONTROL SPECIFICATIONS ..... 51
11.2VARIABLE FREQUENCY DRIVER BOARD FAULT ANALYSIS ..... 51

**12. TROUBLESHOOTING METHOD ..... 52**

12.1 NO COOLING(AIR COOLING-ELECTRONIC) ..... 52
12.2 NO WORKING OF COMPRESSOR ..... 53
12.3 INSIDE FROSTING, NO DEFROSTING ..... 53
12.4 INSIDE FROSTING, NO DEFROSTING-MAINTENANCE GUIDELINES ..... 54
12.5 LIGHT IS NOT ON ..... 55
12.6FAN FAILURE ..... 55
12.7DEFECTIVE DEFROST CIRCUIT ..... 56
12.8NOISE ..... 56
12.9AIR DUCT NOT OPERATED(ELECTRONICALLY) ..... 57
12.10ICE MAKER NOT MAKE ICE ..... 57

**13. FIGURES AND DETAILS OF REPAIR PARTS ..... 58**

# 1. Significant update notes(None)

# 2. Safety Warning Code

## 2.1 Warning for operation safety

### Important Safety Instructions

| | |
|---|---|
| | **CAUTION**<br>**RISK OF ELECTRIC SHOCK**<br>**DO NOT OPEN** |
| | This symbol indicates that dangerous voltage constituting a risk of electric shock is present within your freezer. |
| | This symbol indicates that there are important operating and maintenance instructions in the literature accompanying your freezer. |

### WARNING

**1)** Read these instructions.

**2)** Keep these instructions.

**3)** Heed all warnings.

**4)** Follow all instructions.

**5)** Do not use this appliance near water.

**6)** Clean only with a damp cloth.

**7)** Do not block any ventilation openings.

**8)** Install in accordance with the manufacturer’s instructions.

**9)** Do not install near any heat sources, such as radiators, heat registers, stoves, or other apparatus that produce heat.

**10)** Do not defeat the safety purpose of the polarized or grounding-type plug. A polarized plug has two blades with one wider than the other. A grounding type plug has two blades and a third grounding prong. The wide blade or the third prong are provided for your safety. If the provided plug does not fit into your outlet, consult an electrician for replacement of the obsolete outlet.

**11)** Protect the power cord from being walked on or pinched, particularly at plugs, convenience receptacles, and the point where they exit from the appliance.

**12)** Do not attempt to modify or extend the power cord of this appliance.

**13)** Unplug this appliance during lightning storms or when it will not be used for long periods of time.

**14)** Make sure that the available AC power matches the voltage requirements of this appliance.

## CONNECTING ELECTRICITY

**WARNING** **Electrical Shock Hazard.**

Plug into a grounded 3-prong outlet.
Do not remove the ground prong.
Do not use an adapter.

Failure to follow these instructions can result in death, fire, or electrical shock.

### WARNING

**Electric Shock Hazard**
**Failure to follow these instructions can result in electric shock, fire, or death.**

**1) WARNING**–Keep ventilation openings, in both the freezer and the built-in structure, clear of obstruction.

**2) WARNING**–Do not touch the interior of the freezer with wet hands. This could result in frost bite.

**3) WARNING**–Do not use mechanical devices or other means to accelerate the defrosting process, other than those recommended by the manufacturer.

**4) WARNING**–Do not damage the refrigerant circuit.

**5)WARNING**–Do not damage the refrigerant tubing when handling, moving, or using the freezer.

**6) WARNING–DANGER**–Never allow children to play with, operate, or crawl inside the freezer. Risk of child entrapment. Before you throw away your old freezer:

**6-1)** Take off the doors

**6-2)** Leave the shelves in place so that children may not easily climb inside

**7)** Unplug the freezer before carrying out user maintenance on it.

**8)** This freezer can be used by children age eight years and older and persons with reduced physical or mental capabilities or lack of experience and knowledge if they are given supervision or instruction concerning the use of the freezer in a safe way and understand the hazards involved. Children should not play with the freezer. Cleaning and maintenance should not be performed by children without supervision.

**9)** If a component part is damaged, it must be replaced by the manufacturer, its service agent, or similar qualified persons in order to avoid a hazard.

**10)** Please dispose of the freezer according to local regulations as the freezer contains flammable gas and refrigerant.

**11)** Follow local regulations regarding disposal of the freezer due to flammable refrigerant and gas. All refrigeration products contain refrigerants, which under the guidelines of federal law must be removed before disposal. It is the consumer's responsibility to comply with federal and local regulations when disposing of this product.

**12)** This freezer is intended to be used in household and similar environments.

**13)** Do not store or use gasoline or any flammable liquids inside or in the vicinity of this freezer.

**14)** Do not use extension cords or ungrounded (two-prong) adapters with this freezer. If the power cord is too short, have a qualified electrician install an outlet near the freezer. Use of an extension cord can negatively affect the freezer's performance.

### Grounding requirement

This freezer must be grounded. This freezer is equipped with a cord having a grounding wire with a grounding plug. The plug must be inserted into an outlet that is properly installed and grounded.

Improper use of the grounding plug can result in a risk of electric shock. Consult a qualified electrician or service person if the grounding instructions are not completely understood, or if doubt exists as to whether the freezer is properly grounded.

## 2.2 Safety instruction for refrigerant




**Explosion Hazard.**

Keep flammable materials and vapors, such as gasoline, away from freezer. Failure to do so can result in fire, explosion, or death.



### Safety instruction for refrigerant

DANGER–Risk of Fire or Explosion. Flammable Refrigerant Used. To Be Repaired Only By Trained Service Personnel. Do Not Use Mechanical Devices. Do Not Puncture Refrigerant Tubing. CAUTION–Risk of Fire or Explosion. Flammable Refrigerant Used. Consult Repair Manual/Owner's Guide Before Attempting To Service This Product. All Safety Precautions Must be Followed. CAUTION–Risk of Fire or Explosion. Dispose of Properly In Accordance With Federal Or Local Regulations. Flammable Refrigerant Used. CAUTION–Risk of Fire or Explosion Due To Puncture Of Refrigerant Tubing; Follow Handling Instructions Carefully. Flammable Refrigerant Used.

# 3. Transport

## 3.1Handling

| Handling | |
|---|---|
| 1)Protect the refrigerator in moving it,Same as shown as left photo, please move it by handcart with cushion<br>2)Remove all packing materials and bottom cushion, the move into house for placement<br>3)After moving it to appropriate location, wait for 2 hours before power on. | 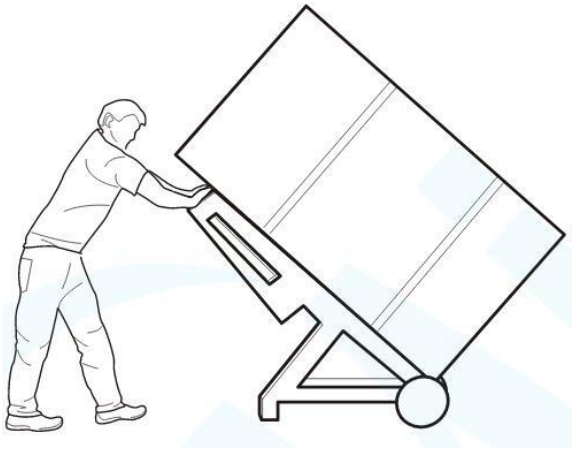 |

# 4. Installation and commissioning

## 4.1Door Disassembly and Assembly

The refrigerator door needs to be dismantled if it cannot enter the room in the whole.

| **Disassembly of Freezer door** | |
|---|---|
| 1) Use cross screwdriver to remove the screws by anticlockwise, and then take out the protective cover. | 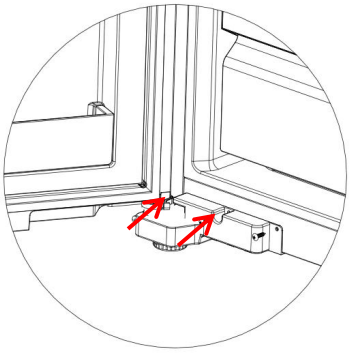 |
| 2) Pull out the spacing guard sheet at the two ends of water connector, and then push the locked cushion inwards, meantime pull out water pipe.<br>Note: please make sure the fast connector can't be left at the end of water pipe of door | 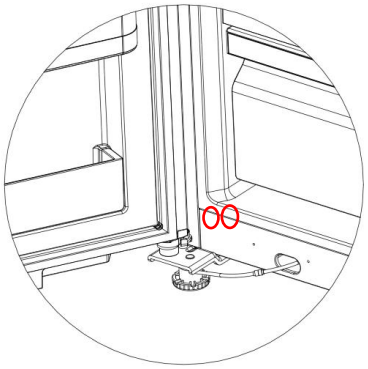 |
| 3) As shown as right photos, use screwdriver to remove the 5 pcs screws, and then remove the upper hinge cover. | 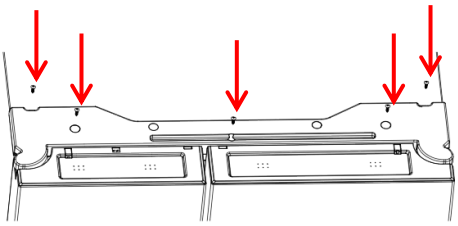 |
| 1) Disconnect the 5pcs fast connectors, then use cross screwdriver or socket spanner to remove the 2pcs M5 screws and 1 pc grounding screw by anticlockwise.<br>Note: please make sure the freezer door fit closely to the cabinet; otherwise the refrigerator door may fall down during above operation. | 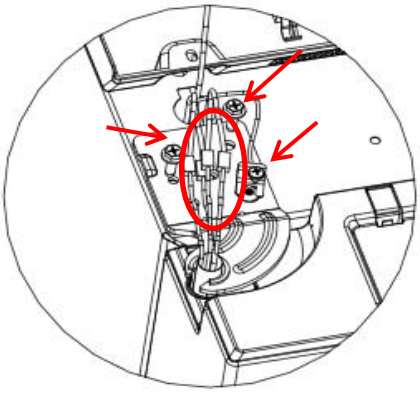 |

| | |
|---|---|
| 5) Lift up the freezer door until the hinge axis separated from the axis hole of door, then carry the door to a suitable place. | 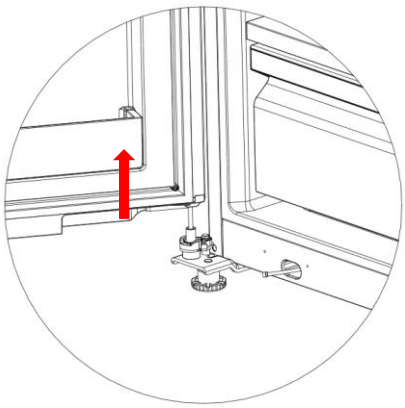 |
| **Disassembly of refrigerator door** | |
| 1) Use cross screwdriver or socket spanner to remove the 2 pcs M5 screws by anticlockwise, and then remove the upper hinge.<br>Note: please make sure the refrigerator door fit closely to the cabinet; otherwise the refrigerator door may fall down during above operation. | 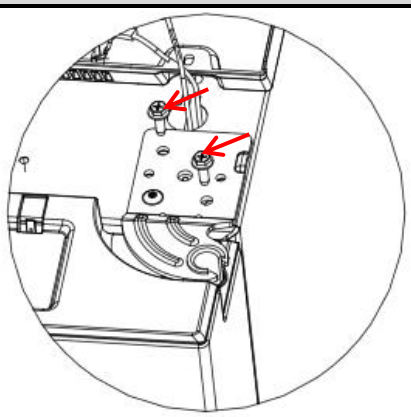 |
| 2) Lift up the refrigerator door until the hinge axis separated from the axis hole of door, then carry the door to a suitable place. | 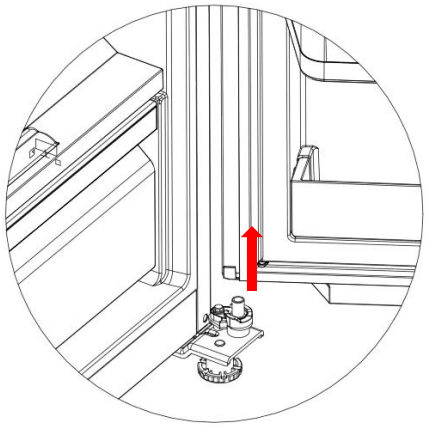 |
| **Assembly of freezer door** | |
| 1) Put the freezer door down gently until the axis of hinge inserted into the axis hole of door completely. | 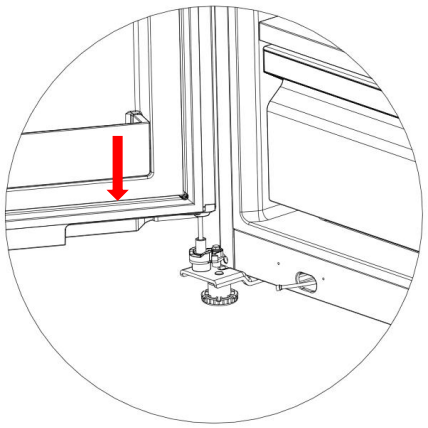 |

| | |
|---|---|
| 2) Put the upper hinge on suitable position, then use cross screwdriver or socket spanner to fix the 2 pcs M5 screws and 1 pc grounding screw by clockwise, and connect the 6 pcs fast connectors. | 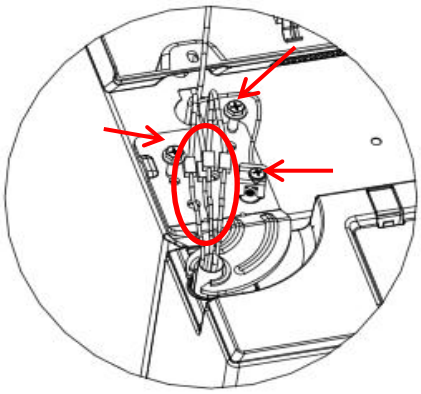 |
| 3) Push the locked cushion of water connector inwards, then insert the water pipe into the water connector to the end, and finally assemble the spacing guard sheet.<br>Note: the water pipe can't be connected incorrectly, only the water pipes in same color can be connected | 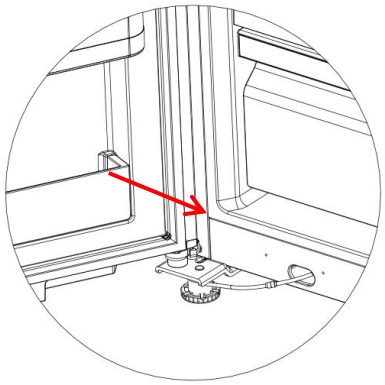 |
| 4) Assemble the protective cover and fix the screws | 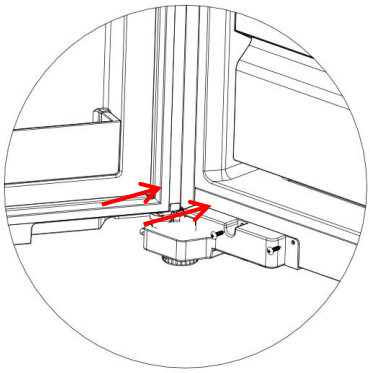 |
| **assembly of refrigerator door** | |
| 1) Put the refrigerator door down gently until the axis of hinge inserted into the axis hole of door completely, and then closes the door, to make sure the refrigerator door fit the cabinet closely. | 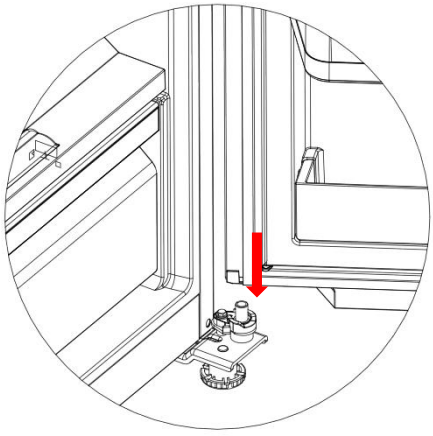 |

| | |
|---|---|
| 2) Put the upper hinge on suitable position, then use cross screwdriver or socket spanner to fix the 2 pcs M5 screws. | 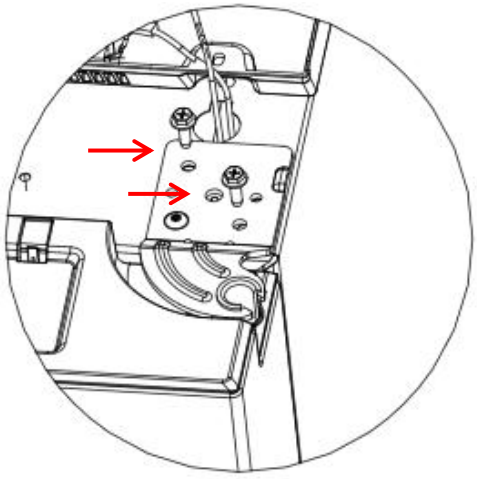 |
| 3) Put the hinge cover on suitable position, and then use the screwdriver to fix the 5 pcs screws. | 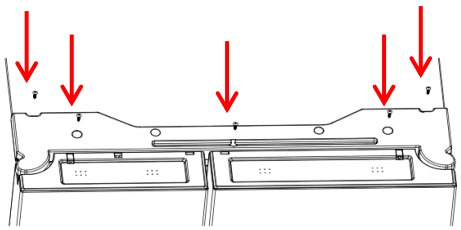 |

## 4.2Installation location

| **Installation location** | |
|---|---|
| Location that is easy for ventilation shall be chosen to facilitate heat dissipation, enhance its performance and reduce the energy consumption. | 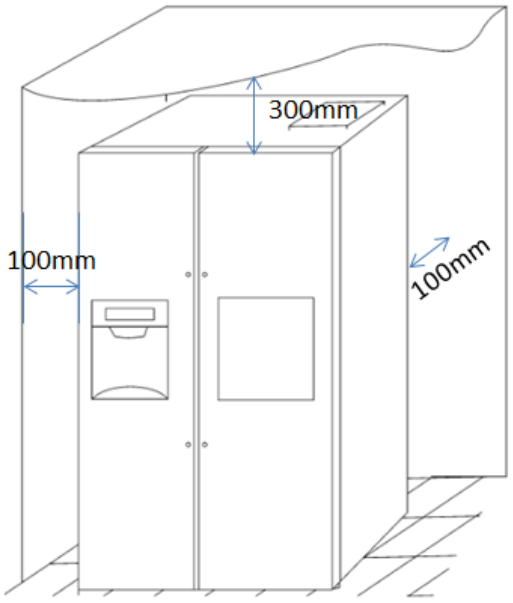 |

## 4.3Leveling of the refrigerator

| **Leveling of the refrigerator** |
|---|

| | |
|---|---|
| If the refrigerator cannot be placed steadily, adjust the footing to level it. | 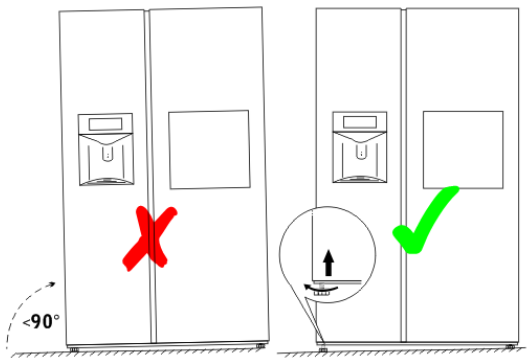 |

## 4.4Left or right open door reversal(None)

| **Door reversal** | |
|---|---|
| Door reversal | None |

## 4.5Installation of handle(None)

| **Installation of handle** | |
|---|---|
| Installation of handle | None |

## 4.6Installation of door lock（None）

| **Installation of door lock** | |
|---|---|
| Installation of door lock | None |

## 4.7Adjustment to level the door

| **Adjustment to level the door（Upanddown）** | |
|---|---|
| 1) Refrigerator door lower: loosen locking nut counterclockwise, then rotate the adjusting nut counterclockwise to adjust the height of door, at last tighten the locking nut clockwise.<br>2) Refrigerator door higher: loosen locking nut counterclockwise firstly, then rotate the adjusting nut clockwise, at last tighten the locking nut clockwise. | 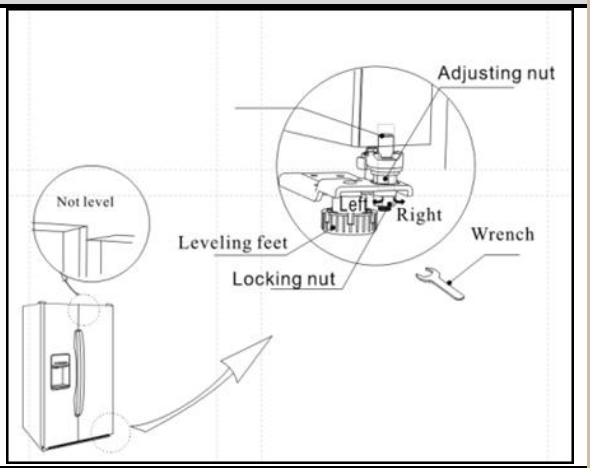 |
| **Adjustmenttoinhomogenousaperture the door(Upanddown)** | |

1) Use screwdriver to remove the 5 pcs screws, and then remove the upper hinge cover. Use screwdriver to loosen the 2 pcs screws, right and left adjust the upper hinge to make door aperture be homogeneity. Put the hinge cover on suitable position, and then use the screwdriver to fix the 5 pcs screws.

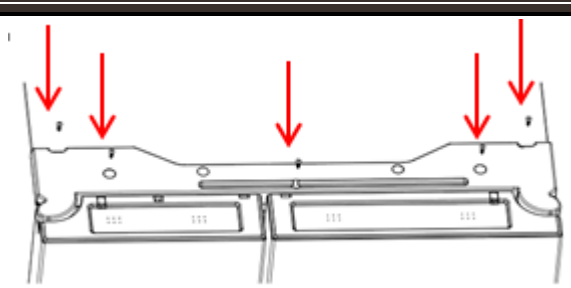

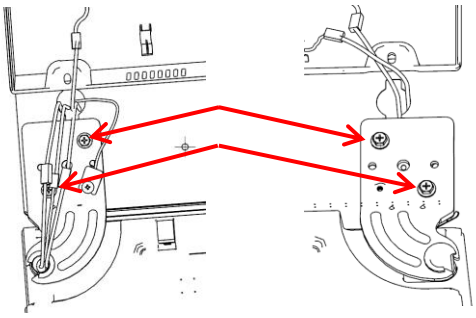

**Adjustmentto plane the door (left and right)**

1) Use screwdriver to remove the 5 pcs screws, and then remove the upper hinge cover. Use screwdriver to loosen the 2 pcs screws, front and backed just the upper hinge to make door aperture be homogeneity.
2) Put the hinge cover on suitable position, and then use the screwdriver to fix the 5 pcs screws.

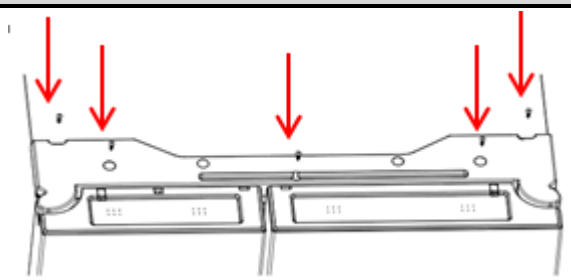

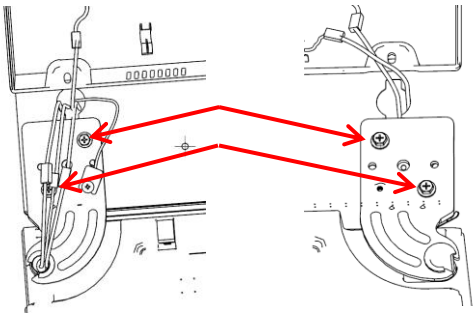

# 5. Product configuration and dimension

## 5.1 Main parts and their names

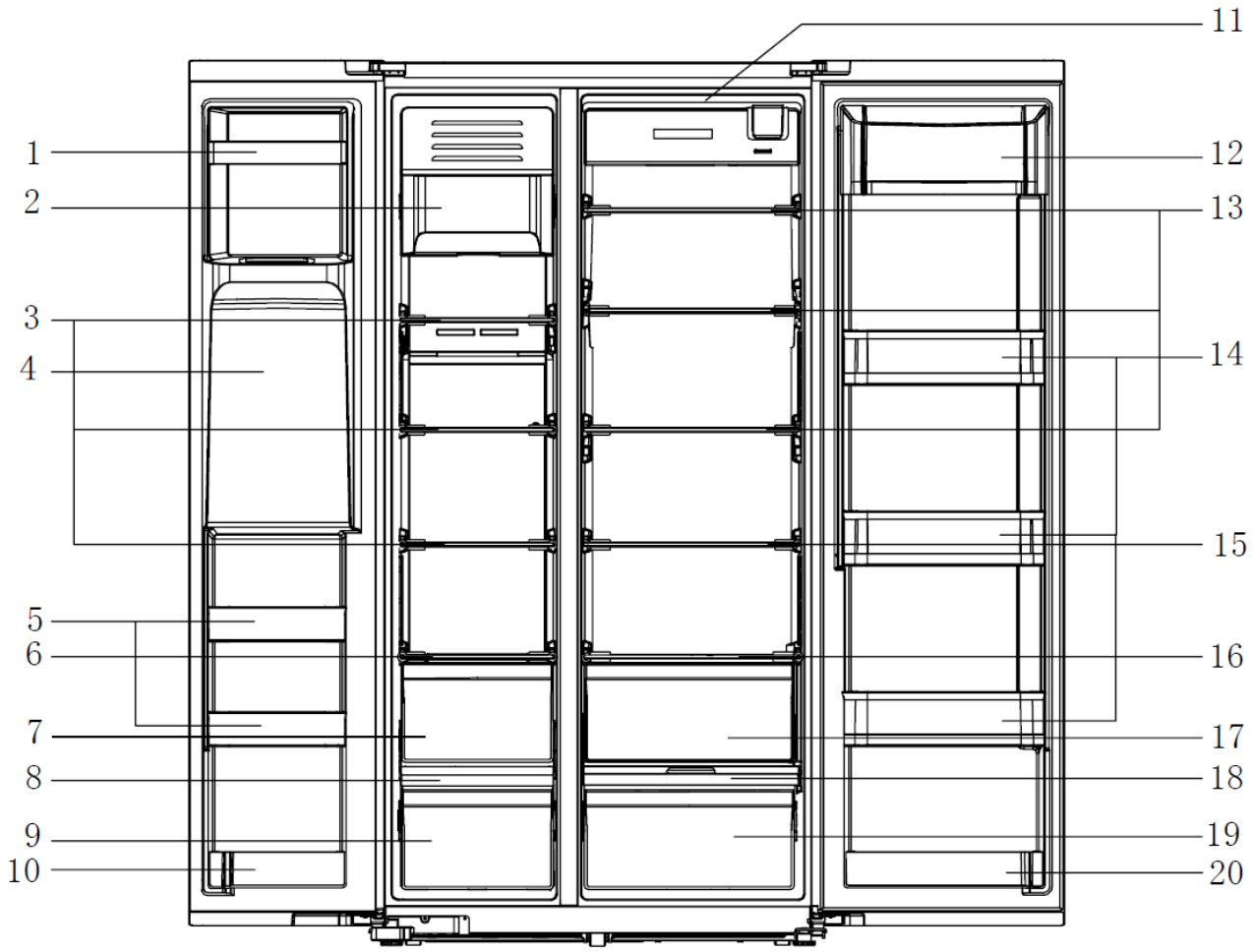


(The picture is only for reference, and specific appearance and configuration are subject to the real product)

| Freezer chamber | Refrigerator chamber |
|---|---|
| 1door rack | 11LED lighting |
| 2ice tank | 12door rack |
| 3shelf | 13shelf |
| 45door rack | 14door rack |
| 6shelf | 15shelf |
| 7drawer | 16shelf |
| 8shelf | 17vegetable crisper |
| 9drawer | 18shelf |
| 10door rack | 19vegetable crisper |
| | 20door rack |

## 5.2 External dimension

| Description | Code | HC-970WE<br>**Size** (mm) |
|---|---|---|
| Height to Top of Case | A | 1775 |
| Width | B | 911 |
| Depth w/Handle | C | 860 |
| Depth w/Handle | C1 | 860 |
| Depth (Door open 90 deg. w) | D | 1273 |
| Width (Door open 90 deg. w) | E | 1039 |
| Depth (Door open 135 deg. w) | F | 1226 |
| Width (Door open 135 deg. w) | G | 1560 |

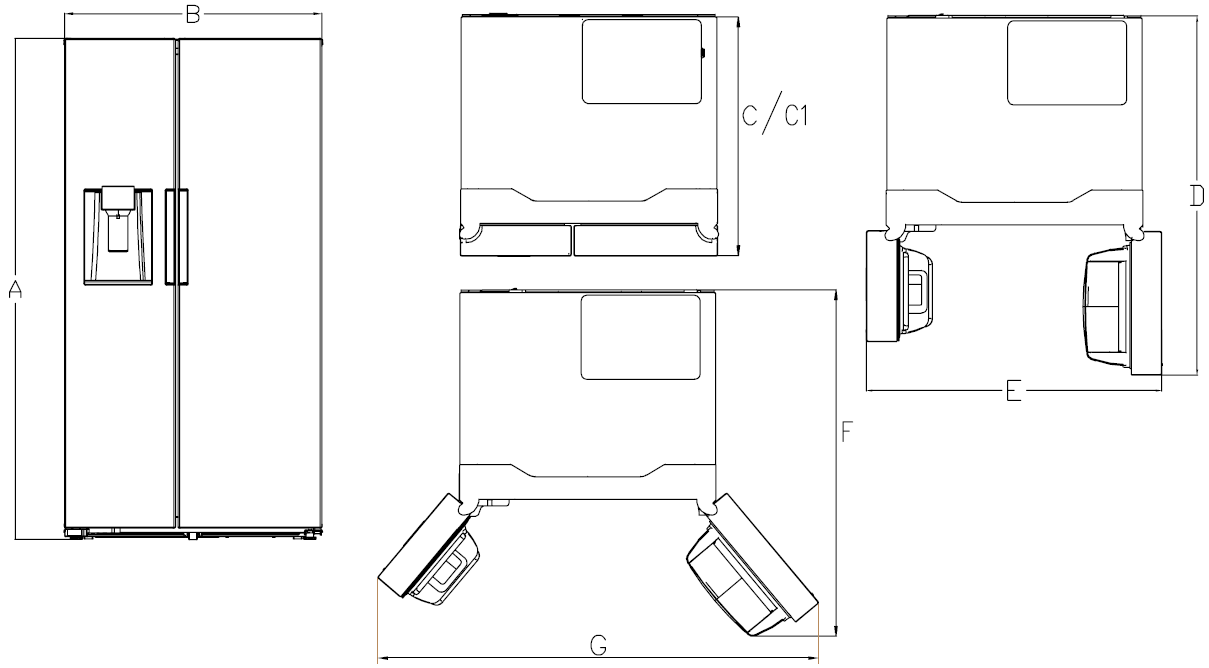


(The picture is only for reference)

## 5.3Location of S/N

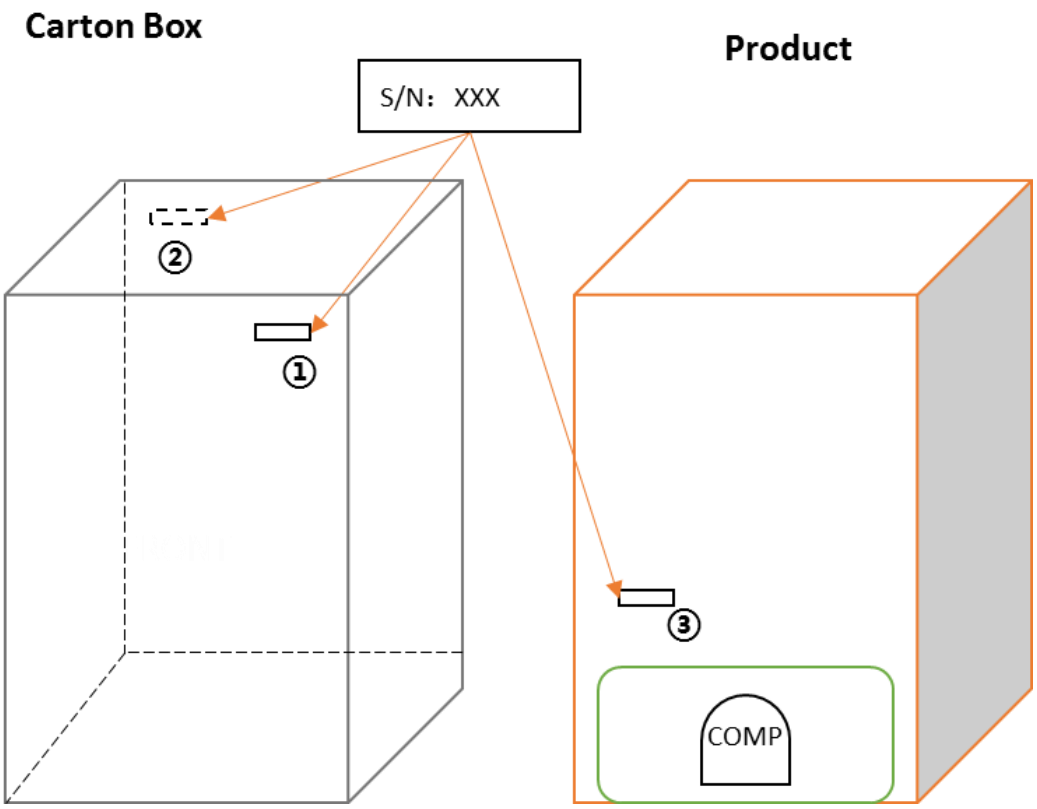


Some products also have S/N on the lower part of the right side of the Cabinet.

# 6. Product specification

## 6.1Electrical parameters

| Applicable Models | HC-957WEN | |
|---|---|---|
| **Product Name** | UR-BCD746WE-DT | |
| **Product Code** | 22031050000741 | |
| **Item** | **Specification** | **Specification** |
| **Refrigerant** | R600a | |
| **Compressor** | DZ120V1U | |
| **Starter(PTC)** | None | |
| **Overload protector(OLP)** | B110-105 | |
| **Integrate PTC+OLP** | None | |
| **Variable frequency driver board** | HGFM/220-240V(50/60)Hz | |
| **Capacitor** | None | |
| **Power filter** | Have | |
| **Power reactor** | None | |
| **Winding resistance of compressor wiring terminal** | Rmc: 9.30Ω±5%<br>Rsc: 9.30Ω±5%<br>Rms;9.30Ω±5% | |
| **Winding resistance picture** | 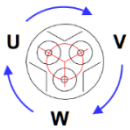 | |
| **The input power of compressor** | 165W | |
| **Motor** | | |
| **Fan motor of the freezing chamber** | DC12V/≤3.5W | |
| **Electric damperof the refrigerating chamber** | DC12V 60mA | |
| **Condensation fan** | DC12V 2.5W | |
| **separation the ice motor** | DC12V 6W | |
| **ice output motor** | DC165V | |
| **Open door motor** | DC12V | |
| **Lights inside the refrigerator** | | |
| **Lights inside the freezing chamber** | 12V≤2.5W | |
| **Lights inside the refrigerating chamber** | 12V≤2.5W | |
| **othersLights** | 5V≤1W | |
| **Switch of the refrigerator door** | □Mechanical switch<br>■Magnetism control switch | |

## 6.2Cooling temperature setting range

| Compartment | The highest (°C) | Lowest (°C) |
|---|---|---|
| **Freezing** | -14 | -22 |
| **Refrigerating** | 7 | 1 |

## 6.3Defrosting parts

**electronic type**

| Item | Specification |
|---|---|
| **Defrosting sensor** | NTC B3839 |
| **Fuse** | 77℃ |
| **Defrost heater in freezing chamber** | 115V 240W |

## 6.4Circuit diagram

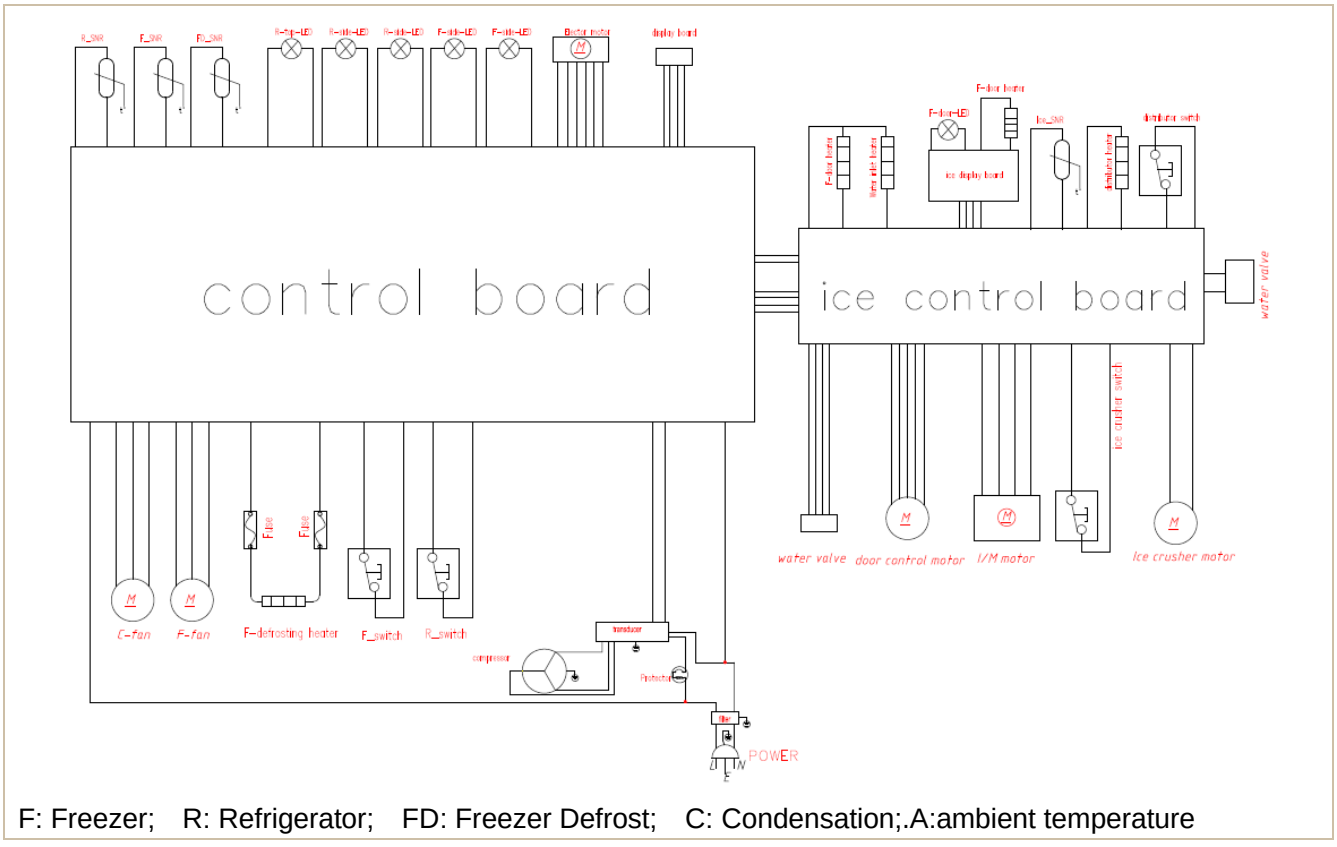


F: Freezer; R: Refrigerator; FD: Freezer Defrost; C: Condensation;.A:ambient temperature

## 6.5Main control board structure diagram

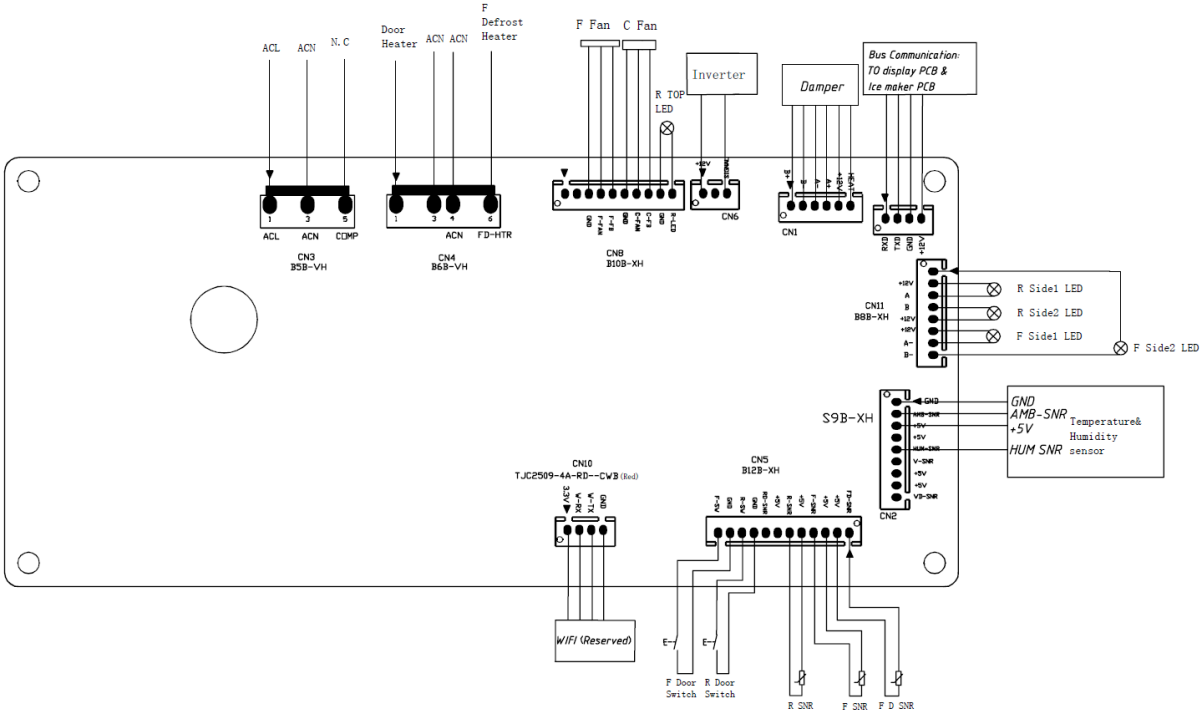


## 6.5.1 Ice maker control board structure diagram

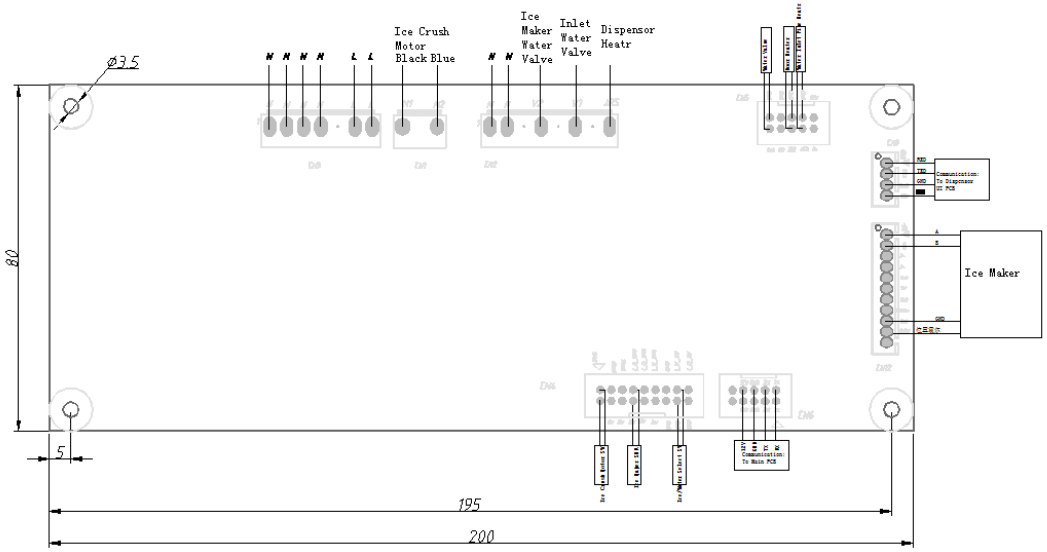


## 6.6Electric exchange valve (NONE)

| Model | Specification |
|---|---|
| None | None |

## 6.7Water valve

| Model | Specification |
|---|---|
| / | 115V 20W（Compressor case） |
| / | 12V 360mA（refrigerating chamber） |

# 7.Refrigerating piping system and circulating route of cooling air

## 7.1 Refrigerating piping system

❶Compressor→❷Condenser→❸Anti-water condensed pipe→❹Drier→❺Capillary Tube→❻Evaporator→❼Suction Pipe→❽Suction connection Pipe→❶Compressor

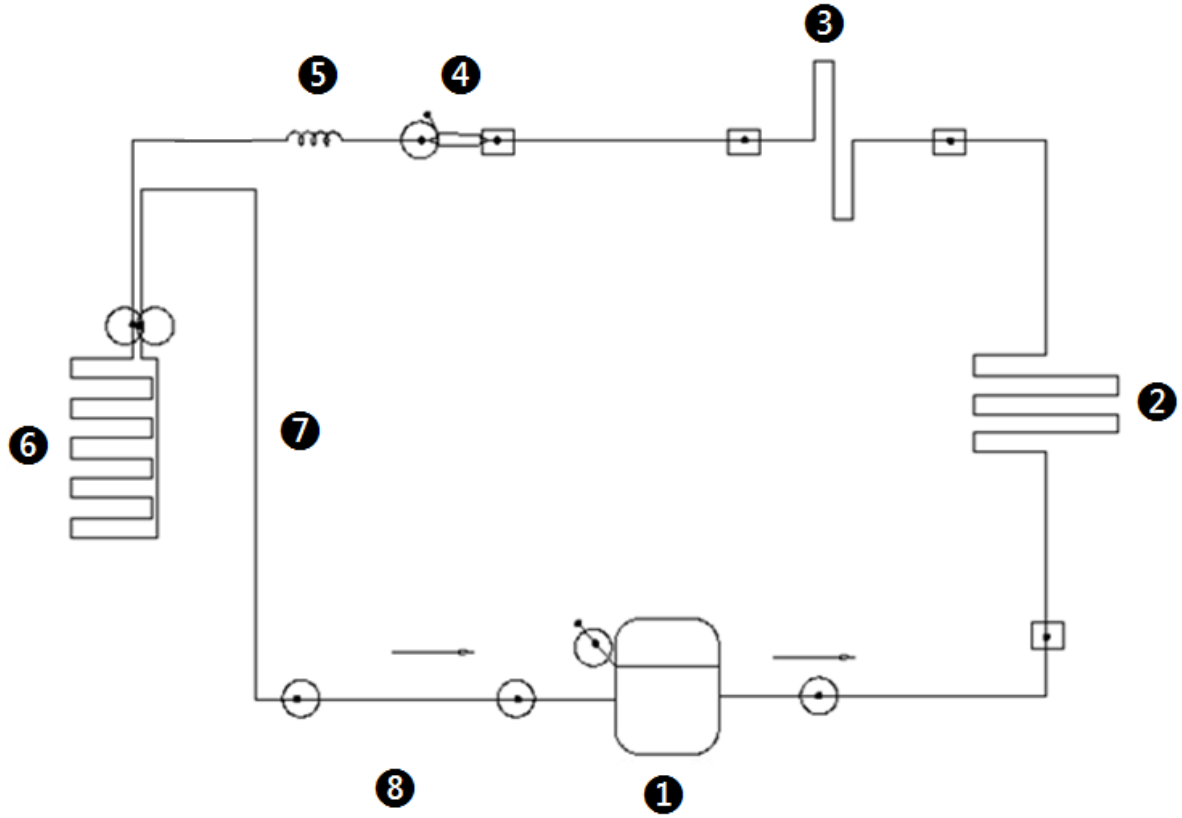


## 7.2Special soldering position (None)

## 7.3Circulating route of cooling air

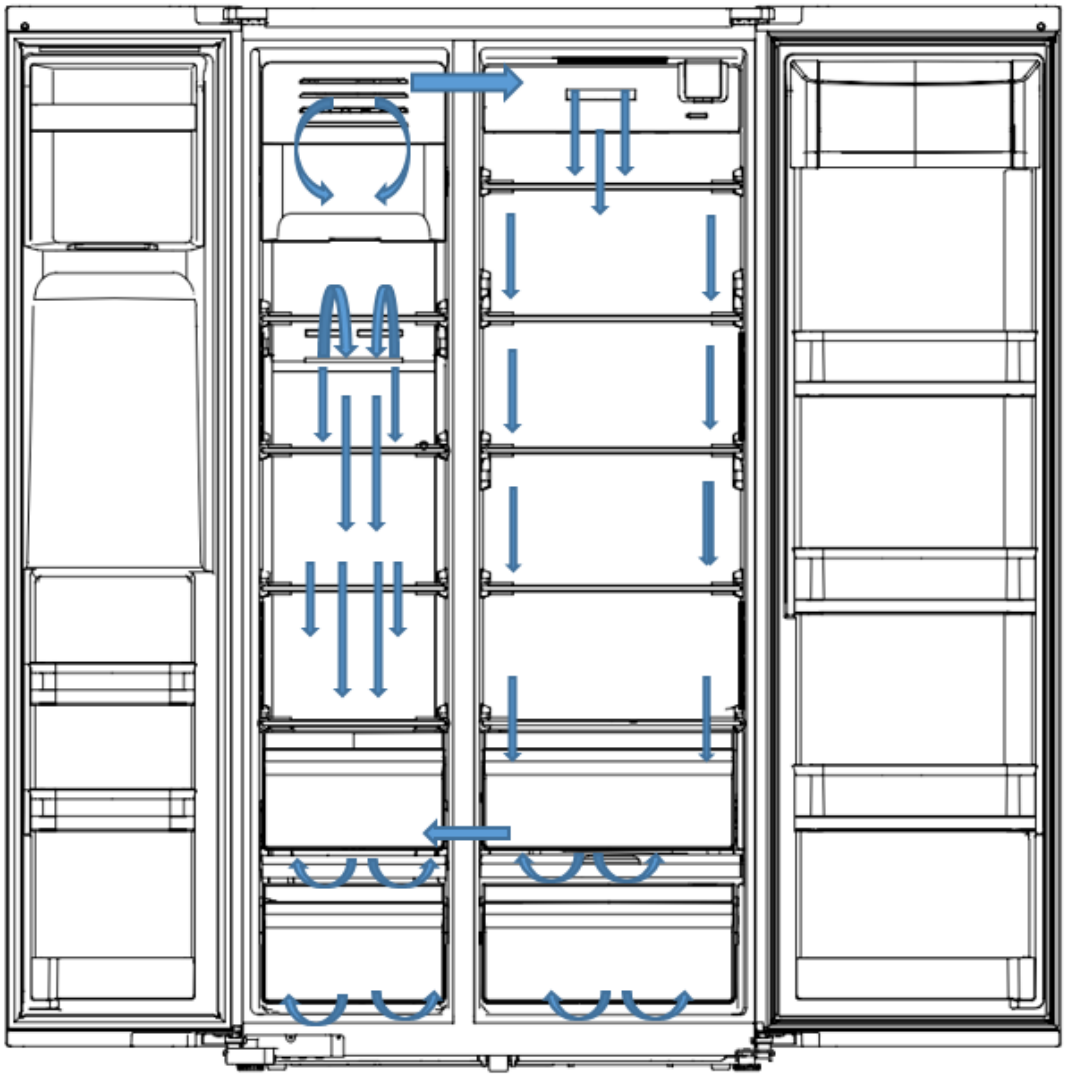

# 8. Dismantling of parts

## 8.1 Parts on the door

| Door seal | |
|---|---|
| Door seal is installed into door liner groove.<br>1)Open the refrigerator door;<br>2)Take the door seal ① out of door liner; |  |
| **Door tray** | |
| While squeezing it inward, lift up the baffle and take it out from refrigerator liner. |  |

## 8.2Parts inside the refrigerator

| Shelves | |
|---|---|
| 1）Lift up the division plate with a proper force and pull it out towards yourself; |  |

| Freezer Drawer | |
|---|---|
| The drawer is located at the freezing chambers;<br>1)Pull the drawer out completely;<br>2)Lift it up slightly and take it out from the refrigerator. |  |

## 8.3 Light system

| Light | |
|---|---|
| Light of the refrigerating | |
| 1）Use vacuum cap to pull the lampshade outwards |  |
| 2）Push away LED light panel with your hand along the arrow direction shown in the picture and separate LED light panel from the hook; then take down LED light panel | 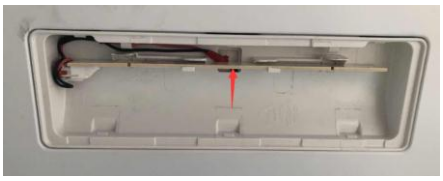 |
| 3）Remove the connecting harness terminals on LED light panel and take down the LED light panel. |  |
| Light of the freezing | |
| Refer to the method of disassembling the freezer light. | |
| **Light switch** | |
| 1） Use screwdriver to remove the 5 pcs screws, and then remove the upper hinge cover. |  |

| | |
|---|---|
| Pull the terminal,remove the light switch. | 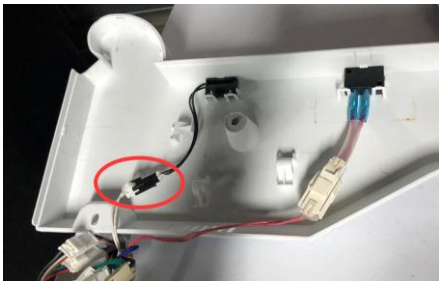<br> |
| **Fresh light** | |
| Fresh light | None |

## 8.4 Air duct components in refrigerating chamber and fan motor

| **Air duct components refrigeratingchamber** | |
|---|---|
| 1）Remove by cross screwdriver the screws on the positions shown in the picture anticlockwise. | 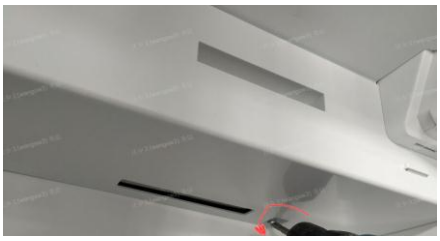<br> |
| Remove the filter along the arrow direction, then remove the decoration cover of refrigerator air duct until air duct decoration cover completely falls off from refrigerator body and air duct foam， remove connecting terminals of sensors, then take out the decoration cover of refrigerating air duct. |  |

| | |
|---|---|
| | 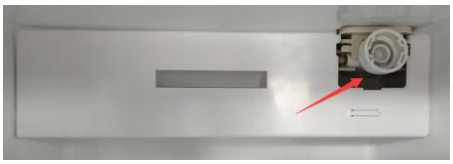<br>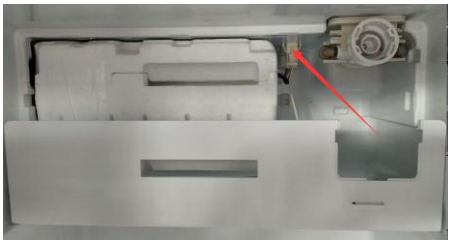 |
| Remove connecting terminals of ventilation door by hands, catch hold of air duct foam in refrigerating chamber and pull it towards the arrow direction shown in the picture until air duct foam is separated from refrigerator body, and take out refrigerating air duct foam. | <br>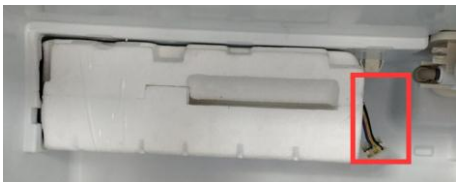 |
| **Fan motor of air duct** | |
| | None |
| **Electric damper** | |
| | None |

## 8.5 Air duct components in freezing chamber and fan motor

| **Air duct components in freezing chamber** | |
|---|---|
| 1）First, take out the screw cap of air duct cover with flat-blade screwdriver or blade; then, remove by cross screwdriver the two screws fixing air duct cover anticlockwise. | <br> |

| | |
|---|---|
| 2）As shown in the right picture, catch hold of upper part of freezing air duct as shown in the picture, pull it outward along the arrow direction with strength until air duct is separated from refrigerator body, remove the connecting harness between fan and refrigerator body, and take down freezing air duct. |  |
| Take out the one crew with cross screwdriver, pull the snap joint of upper air duct outward to make cover plate of upper air duct in freezing chamber fall off from air duct. | 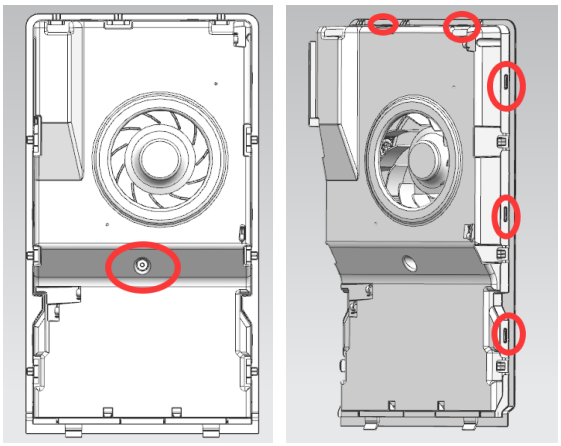 |
| After the removal of upper air duct in freezing chamber. take out the one crew with cross screwdriver. Catch hold of cover plate of freezing lower air duct shown in the picture, pull it out along the arrow direction until it is separated from refrigerator body and take it out. |  |
| **Fan motor of air duct** | |
| 1）冷冻室上风道盖板拆除后，用十字螺丝刀把三颗固定螺钉沿逆时针方向卸下。完成冷冻风扇电机的拆卸<br>After the removal of cover plate of upper air duct in freezing chamber. Remove the three fixing screws anticlockwise by cross screwdriver. Complete disassembly of the motor | 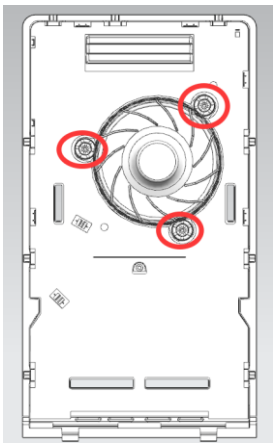 |

## 8.6 Evaporator and Defrost system

| Evaporator in freezing chamber | |
|---|---|
| **Evaporator in freezing chamber**<br>1）Remove the air duct components in freezing chamber.<br>2）Disconnect all connectors.<br>3）Remove the welding on inlet and outlet tubes.<br>4）Remove two screws which are used to fix the evaporator and remove the evaporator. |  |
| **Components on the evaporator** | |
| **Defrost thermostat** | None |
| **Defrosting fuse**①1）Disconnect the fuse connector.<br>2）Cut off the band which fixes the fuse.<br>3）Separate the fuse and the evaporator.<br>*Don't break the welding of the evaporator in case that only the fuse needs to be replaced. |  |
| **Defrost sensor**②<br>The defrost sensor is located on top of the evaporator.<br>1）Disconnect the connector of defrost sensor<br>2）Cut off the band which fixes the sensor.<br>3）Separate the sensor and the evaporator.<br>*Don't break the welding of the evaporator in case that only the sensor needs to be replaced. |  |
| **Defrost heater**③<br>The defrost heater is located at bottom of the evaporator.<br>1）Disconnect the connector of defrost heater.<br>2）Cut off the band which fixes the defrost heater.<br>3）Take off the defrost heater from the evaporator.<br>*Don't break the welding of the evaporator in case that only the defrost heater needs to be replaced. | 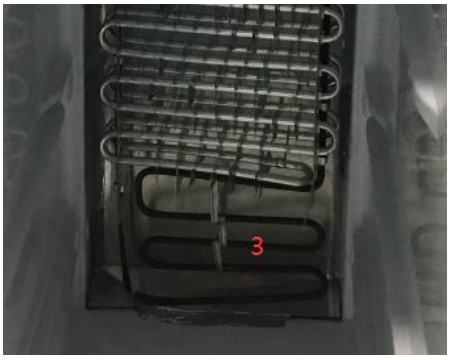 |

| Evaporator in refrigerating chamber | |
|---|---|
| | None |

| Components on the evaporator | |
|---|---|
| Defrosting fuse | None |
| Defrost sensor | None |
| Defrost heater | None |

## 8.7 Compressor case

| Rear cover | |
|---|---|
| 1）Remove by cross screwdriver the screws fixing back cover plate of compressor chamber anticlockwise<br>2）Take the back cover plate of compressor chamber upward. |  |
| **Compressor and the cooling system pipe** | |
| 1）Cut off the power, remove the goods in the refrigerator, with the tape to make the door fixed firmly and prevent the door dropping when the refrigerator dumping. | 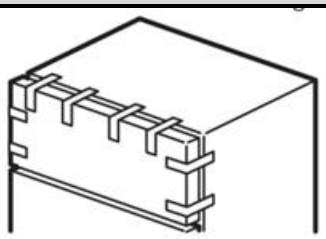 |
| 2）Slowly tilt the refrigerator forward, relying on the wall or a solid enough object, leaving space to facilitate the operation. For safety, it should be carried by someone to prevent its falling. | 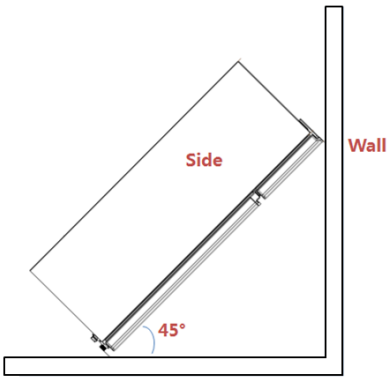 |
| 3）Cut off the compressor pipeline.-❶Cut off the process pipeline.-❷Cut off the low-pressure muffler.-❸Cut off the high-pressure exhaust pipe. | 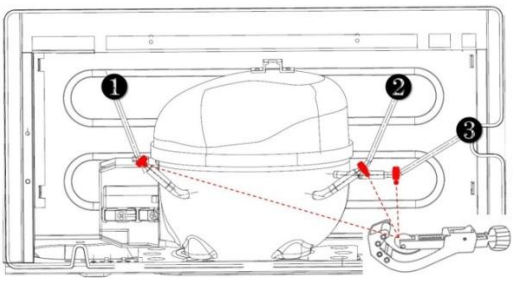 |

| | |
|---|---|
| 4-1）**Remove the screws(for some models)**<br>-Two screws outside<br>-One screw inside | 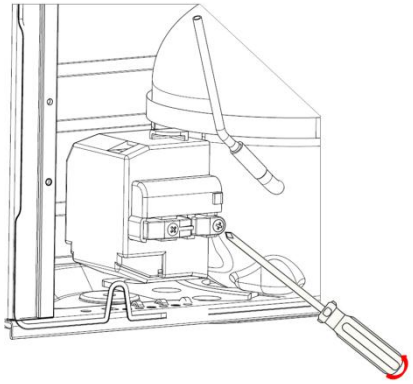 |
| 4-2）**Remove the metal clamp(for some models)**<br>-Disassembly the metal clamp that is fix the electric appliance shield | 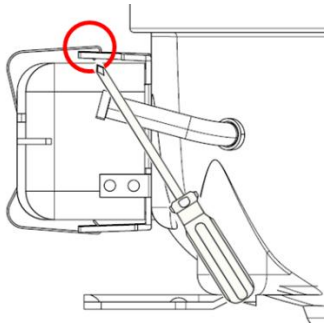 |
| 5）**Remove the clipping strip**<br>Slowly pull it out | 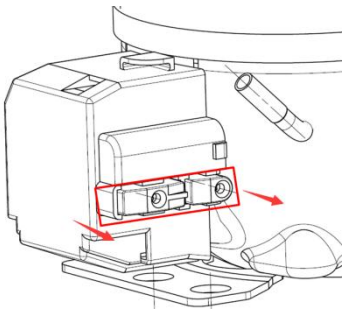 |
| 6）**Remove the protective cover**<br>-Pry the protective cover slowly from the upper part,<br>-Pull it out and remove it. | 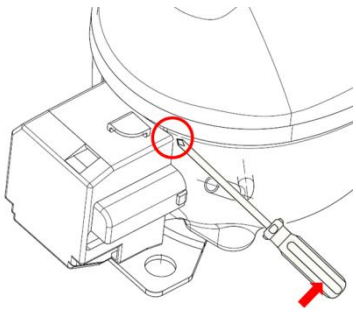 |

| | |
|---|---|
| 7）**Remove the starter and protector**<br>Unplug the starter and protector (you can use a screwdriver to pry it slowly) | 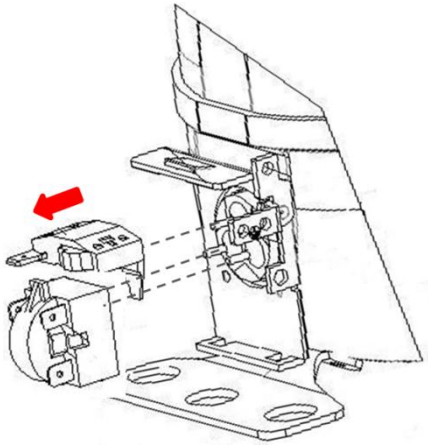 |
| 8）Loosen the screw of the compressor bottom plate,remove the floor together with the compressor from the box. | 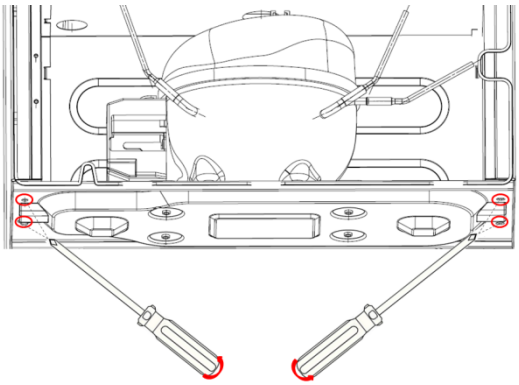 |
| 9）Use the wrench to remove the bolts by steps❹❺❻❼, replace the compressor and reverse process can complete installation. | 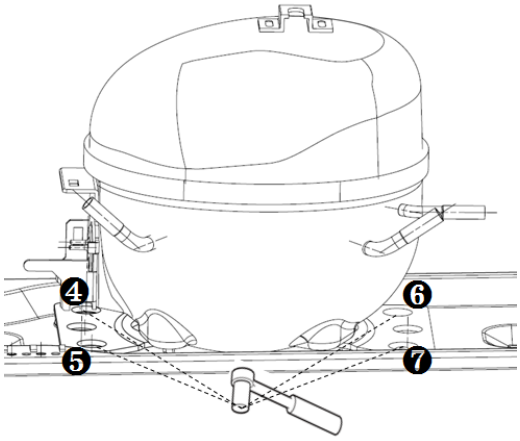 |
| 10）Use Pipe cutter cut off the condenser tube❽, then Shear off capillary❾by the capillary tube scissors. | 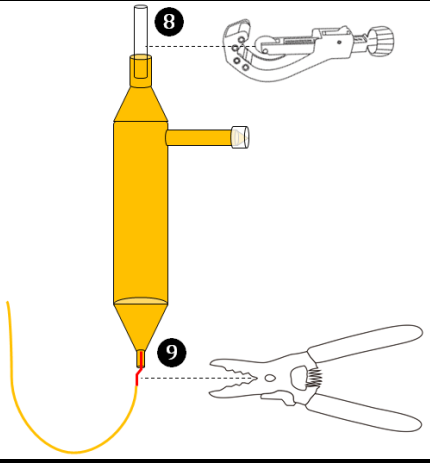 |

| | |
|---|---|
| 11）Replace the compressorand welding the compressor pipeline.-❿Welding the process pipeline.-⓫Welding the low-pressure muffler.-⓬Welding the high-pressure exhaust pipe. | 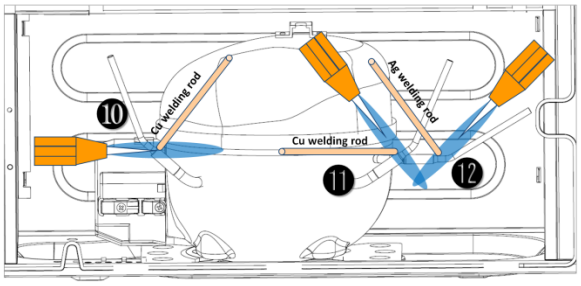 |
| 12）Replace thefilter, Cu-Fe tubes welding ⓭used Ag welding rod, Cu-Cu tubes welding⓮ used Cu welding rod. | 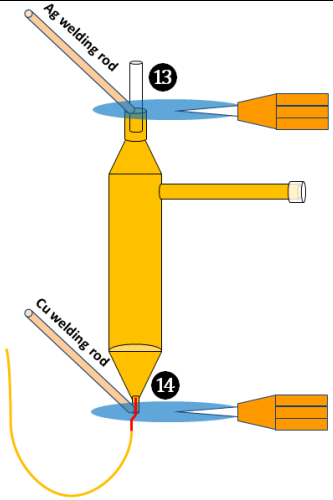 |
| 13）Vacuum system,The degree of vacuum below 6Pa. | 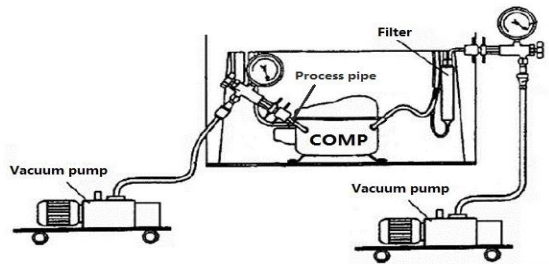 |
| 14）Perfusion refrigerant. | 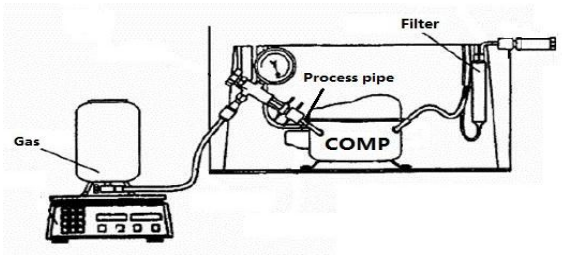 |
| 15）Use the vise grip pliers clamp the middle of the process pipe, thenseal welding process tube⓯⓰. | 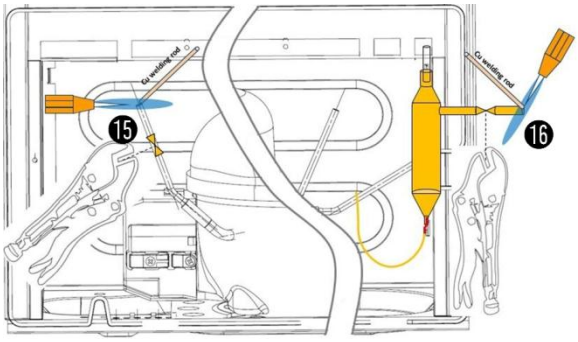 |
| **Condenser fan motor** | |

| | |
|---|---|
| 1)Unplug the wiring connector by pressing the terminal lock | 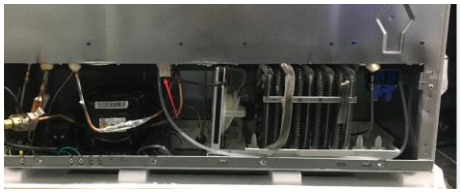 |
| 2) Loosen the screw, then pull out the fan bracket towards the direction what the arrows indicate. | 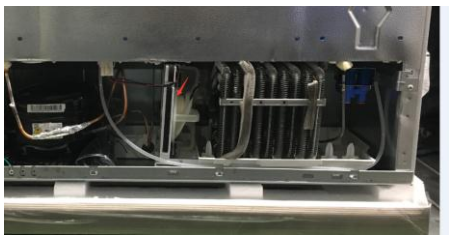 |
| **Back hanging wire tube condensor** | |
| | None |
| **Piping system in the compressor case** | |
| ❶Suction Pipe<br>❷Capillary Tube<br>❸Anti-water condensed pipe<br>❹Drier | ❺Compressor<br>❻Condenser fan<br>❼Condenser<br>❽Anti-water condensed pipe |
| 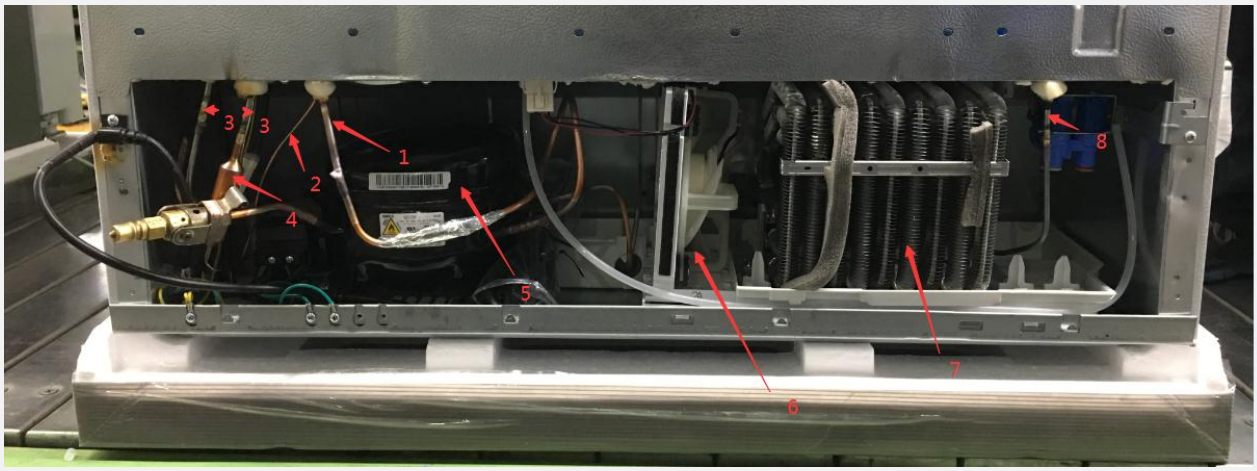 | |
| **Drain tray** | |
| 1）Remove the bottom screws of the compressor bottom plate | 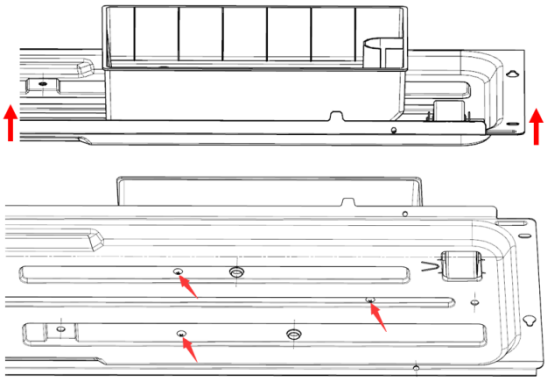 |

| | |
|---|---|
| 2）Replace the drain tray, the reverse process can complete installation. | 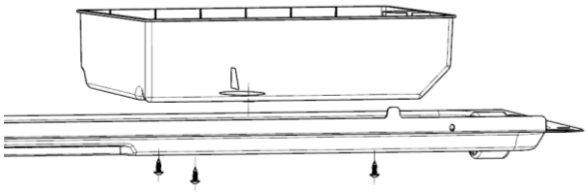 |

## 8.8 Display control board

| **Display control board** | |
|---|---|
| 1）Use vacuum cap to pull the control panel outwards |  |
| 2）Disconnect the fast connector, then remove the control PCB |  |
| **display control panel** | |
| 1） Use vacuum cap to pull the distributor display control panel outwards |  |
| 2）Disconnect the fast connector, then remove the control PCB |  |

## 8.9 Main control board

| Have variable frequency driver board | |
|---|---|
| 1) remove the screw anticlockwise,then remove the PCB housing cover |  |
| 2)Pull the lock of fast connector upwards,then disconnect the fast connector |  |
| 3)Remove the screw anticlockwise,then remove the PCB and variable frequency driver board. |  |

## 8.10 Bar counter(None)

## 8.11 Water dispenser

| Water dispenser | |
|---|---|
| Disassembly and installation of water valve | |
| 1）Remove by cross screwdriver the screws fixing back cover plate of compressor chamber anticlockwise<br>2）Take the back cover plate of compressor chamber upward.<br>3）Unplug the three pipes<br>4）Remove the one screw fixing water valve, and take the water valve. |  |

| | |
|---|---|
| | 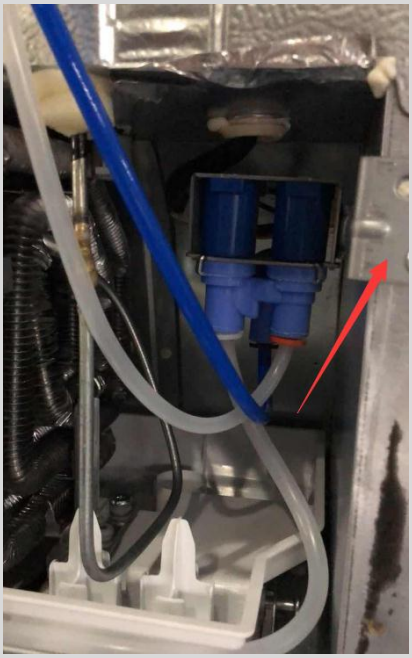 |
| Disassembly and installation of water tank | None |

## 8.12Ice maker

| **disassembly of ice maker** | |
|---|---|
| 1) As shown in the photo, please up lift the ice storage box assembly and pull it out, then the ice storage box can be taken out. |  |
| 2) Pull the ice tray assembly outwards forcefully, and disconnect the wiring connector, then the ice tray assembly can be taken out from refrigerator. |   |

| | |
|---|---|
| 3) Use cross screwdriver (anticlockwise) to remove the 4 screws of motor of ice releasing, and disconnect the wiring connector,then the motor can be taken out from refrigerator. |  |

## 8.13water filter component

| **ADisassembly of filter built-in** | |
|---|---|
| Shut off the water supply, squeeze the mounting box of filter by hands, and detach the lid from the box. |  |
| Unplug the filter by rotating it counterclockwise |  |
| Fasten the mounting cover upward. | 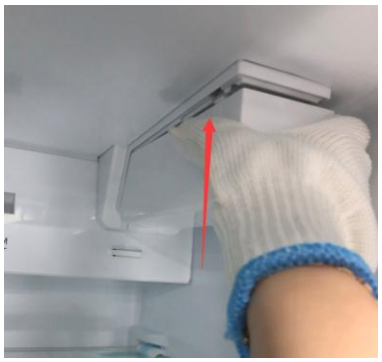 |

| | |
|---|---|
| |  |
| Before using the dispenser, dispense at least 1 gallon of water to purge trapped air from the system after replacing the filter. |  |

# 9.temperature sensing system

## 9.1 Position of sensors

| Position of sensors | |
|---|---|
| Have 5 sensors<br>① Ice machine sensor<br>② Sensor in freezing chamber<br>③ Defrost sensor freezing chamber<br>④ Ambient temperature or humidity sensor<br>⑤ Sensor in refrigerating chamber | 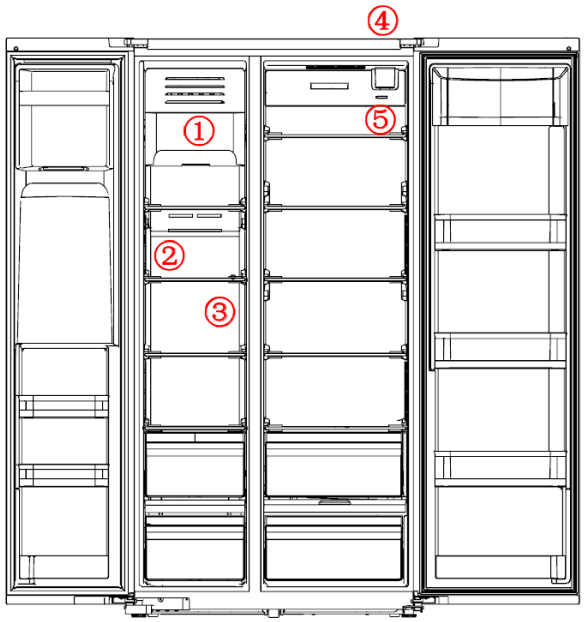 |

## 9.2 Replacement of sensors

| Sensor in freezing chamber | |
|---|---|
| 1）To remove the sensor cover, you may squeeze it up and down;<br>2）Take the sensor out from card slot; |  |
| **Sensor in refrigerating chamber** | |
| 1) remove the decoration cover of refrigerator air duct until air duct decoration cover，refer to 1),2) of 8.4<br>2) Tear up the sponge, take the sensor out from card slot |  |

| | |
|---|---|
| |  |
| **Ambient temperature and humidity sensor** | |
| The sensor used for measurement of ambient temperature is located within upper hinge cover of refrigerating chamber door; | 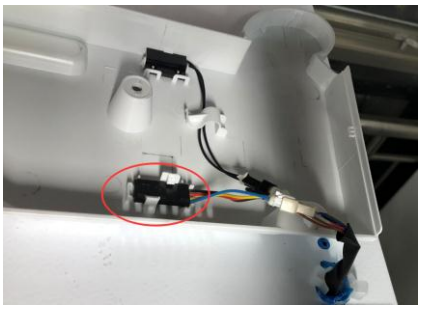 |
| **Defrost sensor in freezing chamber** | |
| The defrost sensor is located on top of the evaporator.<br>1）Disconnect the connector of defrost sensor<br>2）Cut off the band which fixes the sensor.<br>3）Separate the sensor and the evaporator. |  |
| **Ice machine sensor** | |
| The ice machine sensoris located on bottom of the ice-making box. |  |

## 9.3Sensor replacement

| Sensor replacement guidelines① | |
|---|---|
| Cut off the damaged head of sensor. | 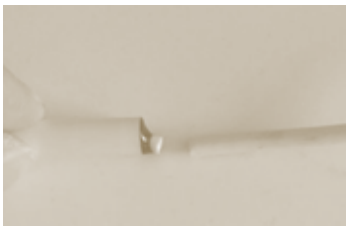 |
| Strip off the sensor wiring. |  |
| Take out a new sensor to cut the head of sensor. (Spare parts code：11201007000795) Its technical specifications apply to all MIDEA refrigerators. |  |
| Strip off the head of the sensor and connect it. |  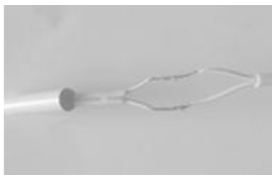 |
| Wrap the two wires together with insulation tape. |   |
| Wrap the two wires together. |  |
| **Sensor replacement guidelines②** | |

| | |
|---|---|
| Disconnect the fast connector |  |

## 9.4Sensor resistance(R/T)

| Tx(℃) | R（KΩ） | Tx(℃) | R（KΩ） | Tx(℃) | R（KΩ） | Tx(℃) | R（KΩ） | Tx(℃) | R（KΩ） |
|---|---|---|---|---|---|---|---|---|---|
| **-30** | 33.81 | **-15** | 14.31 | **0** | 6.495 | **15** | 3.141 | **30** | 1.617 |
| **-29** | 31.85 | **-14** | 13.55 | **1** | 6.175 | **16** | 2.999 | **31** | 1.55 |
| **-28** | 30.01 | **-13** | 12.83 | **2** | 5.873 | **17** | 2.865 | **32** | 1.486 |
| **-27** | 28.29 | **-12** | 12.16 | **3** | 5.587 | **18** | 2.737 | **33** | 1.426 |
| **-26** | 26.68 | **-11** | 11.52 | **4** | 5.315 | **19** | 2.616 | **34** | 1.368 |
| **-25** | 25.17 | **-10** | 10.92 | **5** | 5.06 | **20** | 2.501 | **35** | 1.312 |
| **-24** | 23.76 | **-9** | 10.35 | **6** | 4.818 | **21** | 2.391 | **36** | 1.259 |
| **-23** | 22.43 | **-8** | 9.82 | **7** | 4.589 | **22** | 2.287 | **37** | 1.209 |
| **-22** | 21.18 | **-7** | 9.316 | **8** | 4.372 | **23** | 2.188 | **38** | 1.161 |
| **-21** | 20.01 | **-6** | 8.841 | **9** | 4.167 | **24** | 2.094 | **39** | 1.115 |
| **-20** | 18.9 | **-5** | 8.392 | **10** | 3.972 | **25** | 2.005 | **40** | 1.071 |
| **-19** | 17.87 | **-4** | 7.968 | **11** | 3.788 | **26** | 1.919 | **41** | 1.029 |
| **-18** | 16.9 | **-3** | 7.568 | **12** | 3.613 | **27** | 1.838 | **42** | 0.9885 |
| **-17** | 15.98 | **-2** | 7.19 | **13** | 3.447 | **28** | 1.761 | **43** | 0.9506 |
| **-16** | 15.12 | **-1** | 6.833 | **14** | 3.29 | **29** | 1.687 | **44** | 0.914 |

# 10. Function and operation

## 10.1 Operation panel

| Icons | Button |
|---|---|
| ❶R/F temperature diagram<br>❷Quick freezing<br>❸Quick refrigerating<br>❹ Filter time reset icon<br>❺Ice machine on/off icon<br>❻Energy saving mode icon<br>❼Lock/unlock icon<br>❽Whole ice mode icon ❾Water outlet mode icon<br>❿Crushed ice mode icon | ⒶR temperature adjustment<br>ⒷF temperature adjustment<br>Ⓒ Filter time reset button Ⓓ Ice machine on/off control button<br>ⒺEnergy saving mode button<br>ⒻLock/unlock button<br>GWhole ice mode<br>HWater outlet mode<br>ICrushed ice mode |

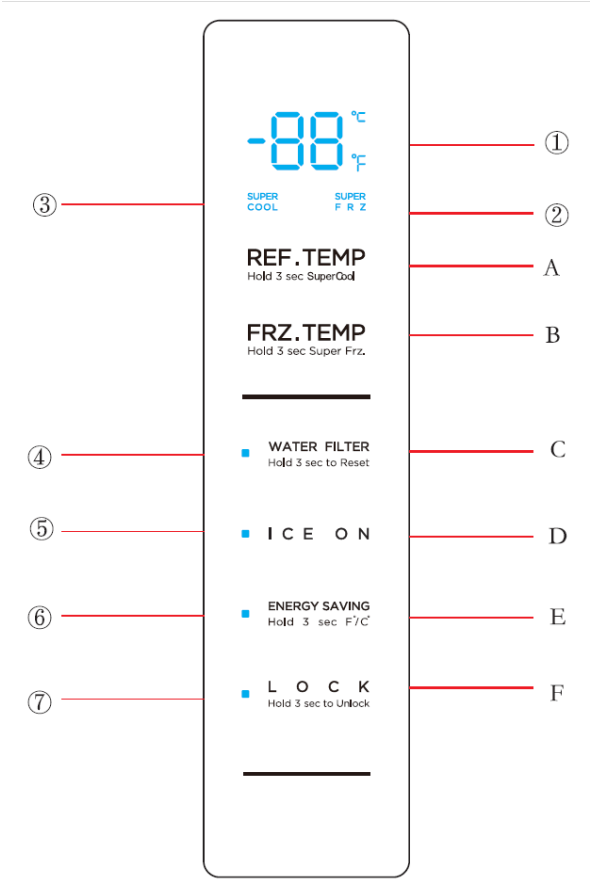


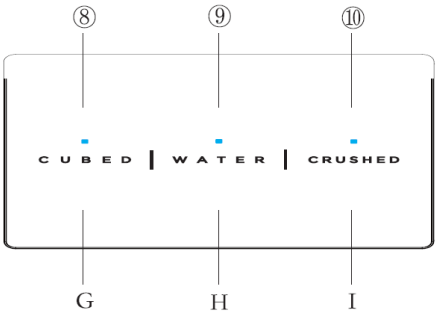


## 10.2 Display

When the power is on for the first time, full display shall last for 3 seconds, the start-up tone shall sound at the same time and then enter into the normal operation display。

(When the power is on for the first time, the set temperature for the refrigerating chamber and freezing chamber is 39 Fahrenheit degree and 0 Fahrenheit degrees respectively, ice make opens by default and the default temperature of the first power on is Fahrenheit).

The fault code shall be displayed when there is a fault (cyclic display); the set temperature of the refrigerating chamber shall be displayed when there is no fault.

## 10.3Temperature control

**1) Temperature adjustment of refrigerator compartment**

Press “REF. TEMP” button, then press “REF.TEMP” to adjust setting temperature, the setting temperature is changed circularly “7℃ 6℃... 1℃ 7℃……” or“44℉ 43℉... 34℉ 44℉……”

**2) Temperature adjustment of Freezer compartment**

Press “FRZ. TEMP” button, and then press “FRZ. TEMP” to adjust setting temperature , the setting temperature is changed circularly “-14℃→-15℃...→-22℃→-14℃……” or“ 7℉→6℉...→-7℉→7℉……”

**3）Frequently-used MODE**

Long press the refrigerating button for 3s to set /cancel the quick refrigerating mode;
Long press the freezing button for 3s to set /cancel the quick freezing mode;
Short press the ENERGY SAVING button for 3s to set /cancel the ENERGY SAVING mode;

**Fast freezing mode:**

the freezer compartment will work as the setting temperature is 1℃/ 34°F，when the quick freezing mode is exited, the set temperature in the refrigerating chamber shall be automatically restored to the set temperature before the quick refrigerating mode;

**Fast cooling mode:**

the refrigerator compartment will work as the setting temperature is -22℃/-7°F，when the quick freezing mode is exited, the set temperature in the freezing chamber shall be automatically restored to the set temperature before the quick freezing mode;

**ENERGY SAVING mode:**

the refrigerator compartment will work as the setting temperature is 7°C/44°F, while the freezer compartment will work as the setting temperature is -14°C/7°F;
When the ENERGY SAVING mode is exited, the set temperature in the refrigerating and freezing chamber shall be automatically restored to the set temperature before the ENERGY SAVING mode;
When the ENERGY SAVING mode setting is valid, the ENERGY SAVING indicator shall light up otherwise it shall go out.

## 10.4 Open door alarm

When refrigerator door or freezer door is open, the display panel is light on. There is notification tone when open door; if refrigerator door or freezer door is open last for 120s, there will be buzzer alarm, until the door is closed。Press any buttons on control panel can cancel this buzzer alarm.
Note: When open the door, the display panel is light on; when the door is closed, the display panel will be light off after 30s if there is no any operation on display panel

## 10.5Function Selection

**1) Mandatory mode (mandatory compressor starting, mandatory defrosting and mandatory ice making)**

All below functions are only for diagnosis purpose, we advise to restart the refrigerator by power on/off if have used these functions.

Buttons operation:

Press both “LOCK/UNLOCK” and “FRZ.TEMP” button last for 3s to enter into/quit mandatory mode, the setting will take effect after locking.

Press “FRZ.TEMP” button, the ref. temperature zone will display “1” “2” “3” “4” circularly,

Different figures represent different functions:

1) When display “0”, the refrigerator will not enter into anyone mandatory mode, and quit the mandatory mode.

2) When display “1”, the compressor will start working last for 36 hours, then it will quit this mode automatically and back to normal working status.

3) When display “3”, the ice maker will turn over the ice for twice, then intake water.

## 10.6Control of ice maker

**1) Ice maker on/off**

Press “ICE ON” button to turn off/on ice maker, the default setting is on.

**2）Options for ice /cooling water**

Press the button of “CUBED”/“WATER”/”CRUSHED” , the corresponding icons will light on .The working time of the power-on filter accumulates. When the filter works for 150 days, the filter icon shall light up to prompt the user to replace the filter and shall flash to prompt the user to replace the filter after 180 days. Long press the "filter time reset" button for 3 seconds to perform the function of "FILTER RESET". At this time the filter timing shall be reset;

## 10.7 Celsius Fahrenheit conversion

Long press “Energy Saving” button for 3s to convert the temperature from Celsius to Fahrenheit and Back again.

## 10.8Fault code and solutions

Note: midea full common fault code, combined with the actual product display reference.

| Fault code | Fault content | Steps for maintenance methods |
|---|---|---|
| E0 | fault of ice maker | Step 1:Check whether the terminal of ice maker in main control board is well stuck, pull out the terminal and re-stick it in place<br>Step 2: Check to see if there’re foreign matters on the terminal<br>Step 3: Check whether the terminal of ice maker is well |
| E1 | Temperature sensor fault in refrigerating chamber | Step 1: Check whether the terminal of temperature sensor in main control board is well stuck, pull out the terminal and re-stick it in place<br>Step 2: Check to see if there’re foreign matters on the terminal<br>Step 3: Inspect the refrigerating sensor whether contact is bad, and resend contact the fast connector<br>Step 4: Replace main control board |
| E2 | Temperature sensor fault in freezing chamber | Step 1: Check whether the terminal of temperature sensor in main control board is well stuck, pull out the terminal and re-stick it in place<br>Step 2: Check to see if there’re foreign matters on the terminal. Pull out the defrost sensor in freezing chamber according to the method in described in Article 9.2 and then inspect the sensor against the resistance value table in 9.3.<br>Step 3: Replace main control board |

| | | |
|---|---|---|
| | | Step 4: Replace electrical wiring main harness |
| E3 | Temperature sensor fault in variable chamber | Step 1: Check whether the terminal of temperature sensor in main control board is well stuck, pull out the terminal and re-stick it in place<br>Step 2: Check to see if there're foreign matters on the terminal. Pull out the defrost sensor in variable chamber according to the method in described in Article 9.2 and then inspect the sensor against the resistance value table in 9.3.<br>Step 3: Replace main control board<br>Step 4: Replace electrical wiring main harness |
| E4 | Defrost sensor fault in refrigerating chamber | Step 1: Check whether the terminal of defrost sensor in main control board is well stuck, pull out the terminal and re-stick it in place<br>Step 2: Check to see if there're foreign matters on the terminal. Pull out the defrost sensor in refrigerating chamber according to the method in described in Article 8.6 and then inspect the sensor against the resistance value table in 9.3<br>Step 3: Replace main control board<br>Step 4: Replace electrical wiring main harness |
| E5 | Defrost sensor fault in freezing chamber | Step 1: Check whether the terminal of defrost sensor in main control board is well stuck, pull out the terminal and re-stick it in place.<br>Step 2: Check to see if there're foreign matters on the terminal.<br>Step 3: Inspect the defrost sensor whether contact is bad, and resend contact the fast connector<br>Step 4: Replace main control board |
| E6 | Communication failure | Step 1: Check whether the terminal CN9 is well stuck, pull out the terminal and re-stick it in place<br>Step 2: Check to see if there're foreign matters on the terminal.<br>Step 3: Inspect the display control board terminal whether contact is bad, and resend contact the fast connector<br>Step 4: Replace main control board<br>Step 5: Replace display control boardStep 6: Replace main wire |
| E7 | Ambient temperature sensor fault | Step 1: Check whether the terminal of temperature sensor in main control board is well stuck, pull out the terminal and re-stick it in place Step 2: Check whether the sensor wiring harness are connected.<br>Step 3: Replace main control board.<br>Step 4: Remove the temperature sensor at the hinge, and replace the temperature sensor. |

| | | |
|---|---|---|
| E8 | Defrost sensor fault in variablechamber | Step 1: Check whether the terminal of defrost sensor in main control board is well stuck, pull out the terminal and re-stick it in place<br>Step 2: Check to see if there're foreign matters on the terminal. Pull out the defrost sensor in refrigerating chamber according to the method in described in Article 8.6 and then inspect the sensor against the resistance value table in 9.3<br>Step 3: Replace main control board<br>Step 4: Replace electrical wiring main harness |
| E9 | High temperature alarm in freezing chamber | Step 1: Check whether the door is tight shut.<br>Step 2: Check whether the power has been off for a long time.<br>Step 3: Check whether the compressor is not refrigerated.<br>Step 4: Same to E2 maintenance methods. |
| EE | Circuit fault of ice maker sensor | Step 1: Check whether the terminal ice maker sensor of main control board is well stuck, pull out the terminal and re-stick it in place and check if there is any foreign matter on the terminal<br>Step 2: Check whether the terminal of ice maker is well |
| EH | Circuit fault of ambient humidity sensor | Step 1: Check whether the terminal ambient humidity sensor of main control board is well stuck, pull out the terminal and re-stick it in place and check if there is any foreign matter on the terminal<br>Step 2: Check whether the sensor wiring harness are connected.<br>Step 3: Replace main control board.<br>Step 4: Remove the humidity sensor, and replace the sensor. |
| EF | Circuit fault of water tank is not installed right in place | to check relevant connectors、whether the tank-base is installed rightly |
| CA | Motherboard ice maker communication failure | Check whether the connection of the terminal CN9 of main control panel and the terminal CN6 of ice maker plate is well stuck. |

| | | |
|---|---|---|
| EP | Ice making machine off-ice fault | Step 1:Check whether the terminal of ice makerin main control board is well stuck, pull out the terminal and re-stick it in place<br>Step 2: Check to see if there're foreign matters on the terminal<br>Step 3: Check whether the terminal of ice maker is well |
| Cubed/water/crushed blink at the same time | Distributor control and ice maker control communication failure | Check whether the connection of the terminal CN9 of ice maker plate of and the terminal CN6 of distributor control is well stuck. |

## 10.9Defrosting function

**Defrosting theory:**

The defrosting of evaporator is realized by the heating of heater, following the temperature rise, the frost on evaporator becomes water, and the water flow into the evaporating pan via the draining system, the water in evaporating pan evaporate away finally

**Defrosting steps:**

Compressor switch off- -air duct closed---the fan in freezer chamber works for 3~10 min(for different kinds of refrigerators, the time is different too)---the heater start working---the heater switch off when the temperature rise to setting---defrosting done.

## 10.10 EYE ice machine Test mode

Enter Mode

Keep pressing the "FRE" and "Energy Saving" button for 3s, enter/exit EYE.

In Mode

Erter EYE, the display digital of ice machine mode will blink, and water gets into ice machine after turning over the ice twice.

Exit Mode

1. Keep pressing the "FRE" and "Energy Saving" button for 3s, exit mode.
2. EYE mode is completed, exit mode.

## 10.11Backup data for power fail

1) The running state of the refrigerator is remembered after compressor running for 1 hour continuously.
2) The running state of the refrigerator is remembered after change function settings and lock.When the refrigerator is out of power and recharged, the running state of the refrigerator is same as before.

# 11. Compressor

## 11.1Compressor on and off Control specifications

1.1 When one of the following conditions is met, the compressor stops:

1) Tr ≤ Trt；
2) The compressor runs continuously for more than 3 hours (Stop 5 minutes);

1.2 When all the following conditions are met, the compressor starts up:

1) Tr ≥Trk;
2) Compressor downtime is more than 5min.

★When 1.1 and 1.2 are not satisfied, the compressor maintains the original state

## 11.2Variable frequency driver board fault analysis

| **running status of LED** | **Fault cause** |
|---|---|
| not Light | not Working |
| Blink once: light 1S, extinguish1S | Standby |
| Blink once: light 0.5S, extinguish1.5S | Overcurrent |
| Blink twice: light 0.5S, extinguish0.5S, interval time(extinguish) is 1.5 second | Overvoltage |
| Blink four times: light 0.5S, extinguish0.5S, interval time(extinguish) is 1.5 second | Undervoltage |
| Blink eight times: light 0.5S, extinguish0.5S, interval time(extinguish) is 1.5 second | LOCK |
| Blink sixteen times: light 0.5S, extinguish0.5S, interval time(extinguish) is 1.5 second | Overload protection |

# 12. Troubleshooting Method

## 12.1 No cooling(Air cooling-Electronic)

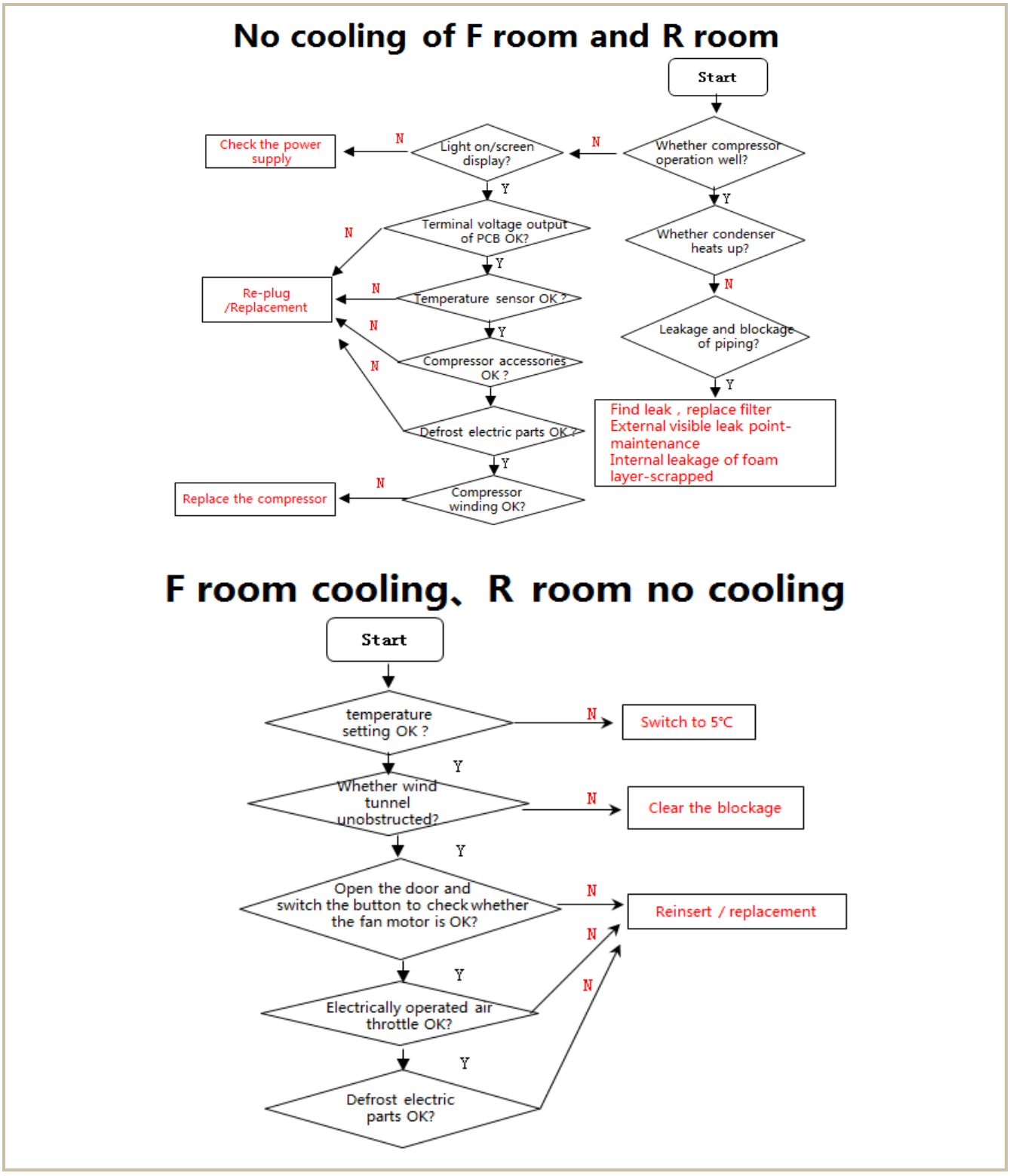

## 12.2 No working of compressor

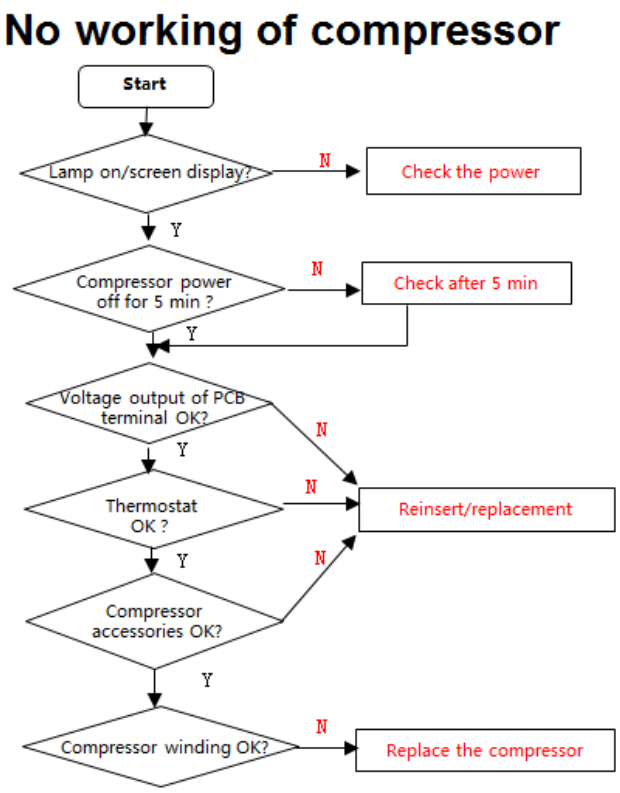


## 12.3 Inside frosting, no defrosting

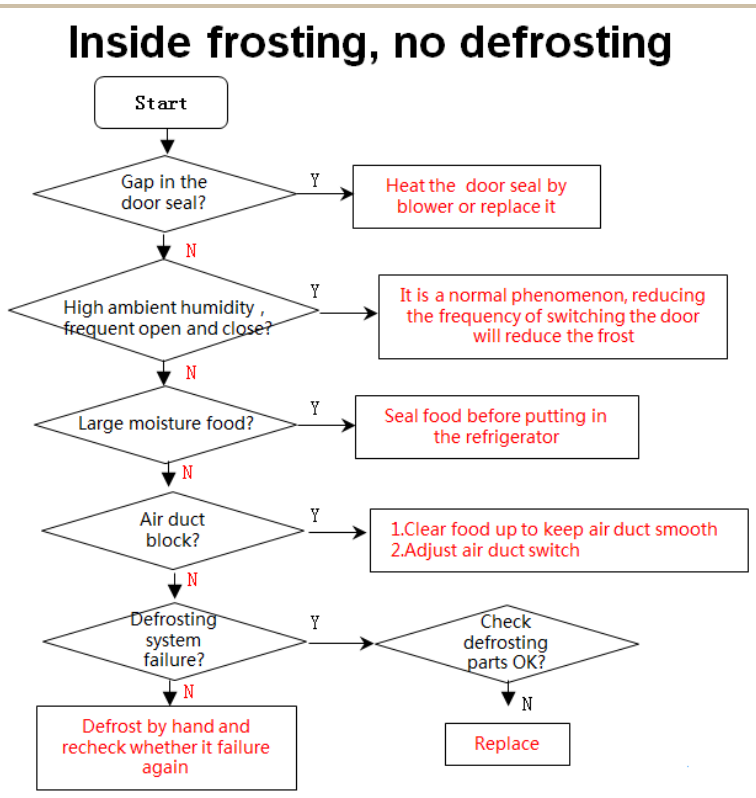

## 12.4 Inside frosting, no defrosting-Maintenance guidelines

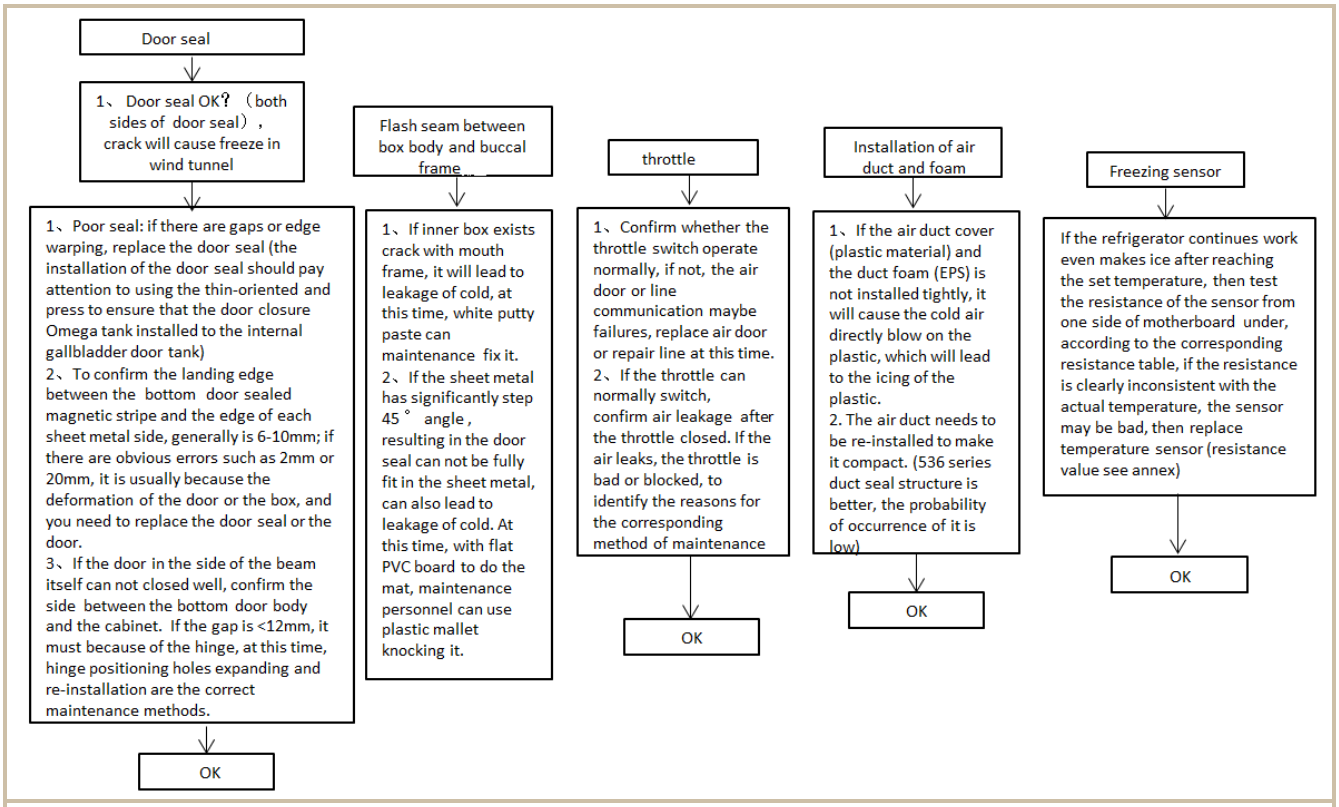


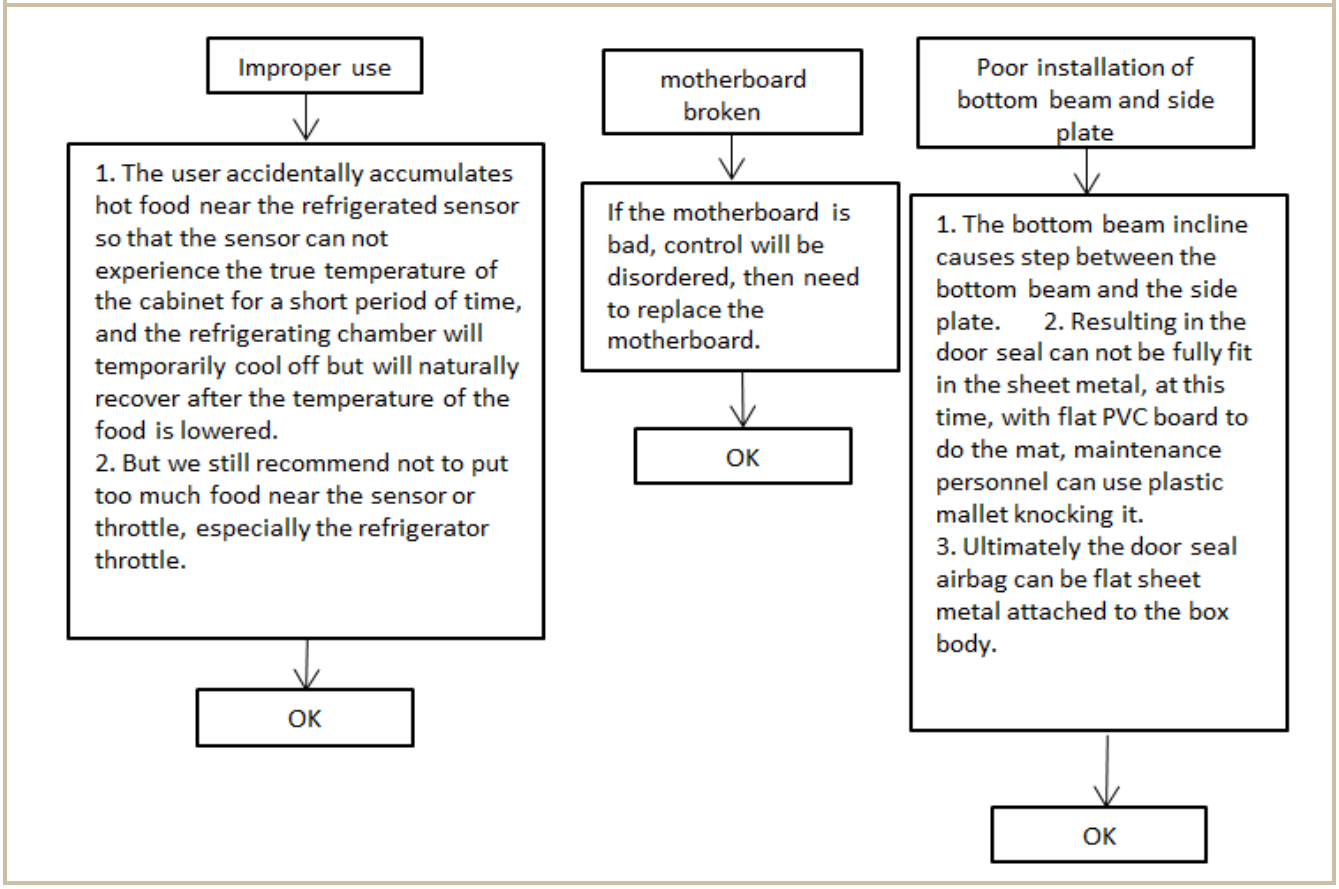

## 12.5 Light is not on

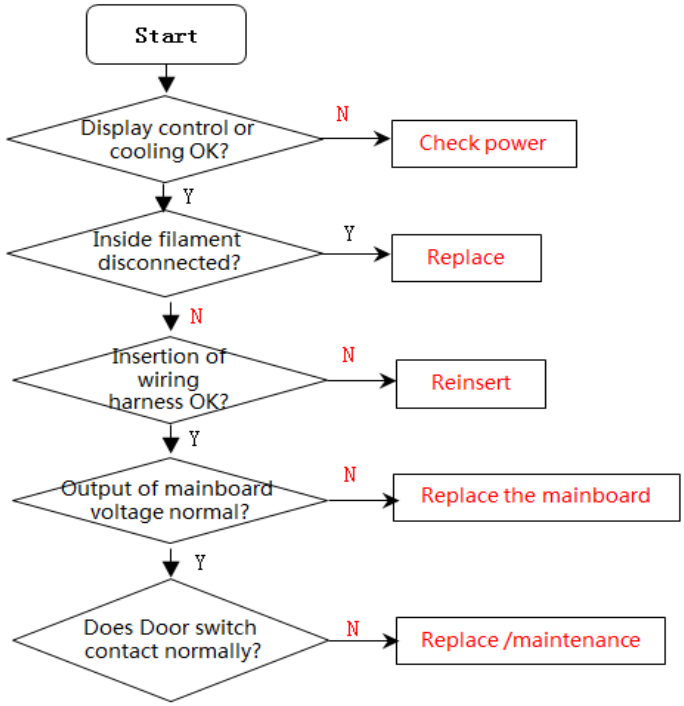


## 12.6Fan failure

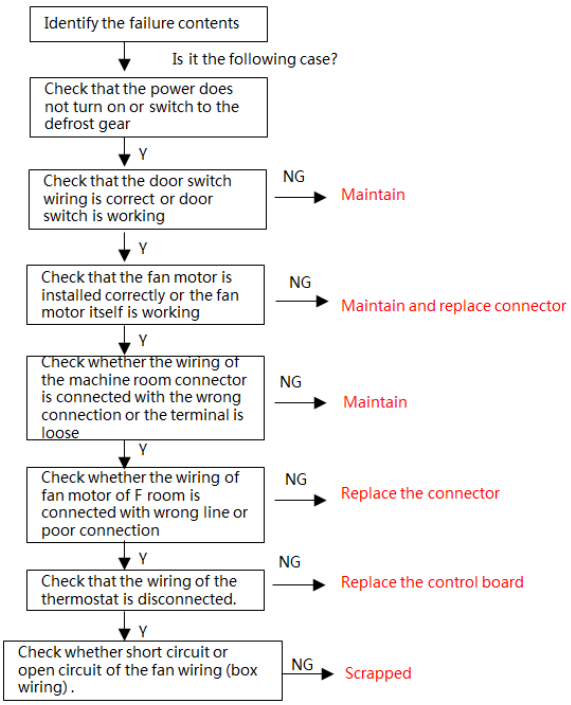


Normal phenomenon for no working of the fan:
1、Poor fan connection or poor installation, loose or reverse of the door switch connector
2、Poor fan installation, leaf contact with the inner board of the foam or touch the line.
3、Insurance circuit of the fan wiring.
4、The timer is not reset in the defrost position .
5、The wire terminals inside the machine compartment connector or control board connector are loose.
6 . The door switch itself is defective or the circuit board is defective (electronic refrigerator).

## 12.7Defective defrost circuit

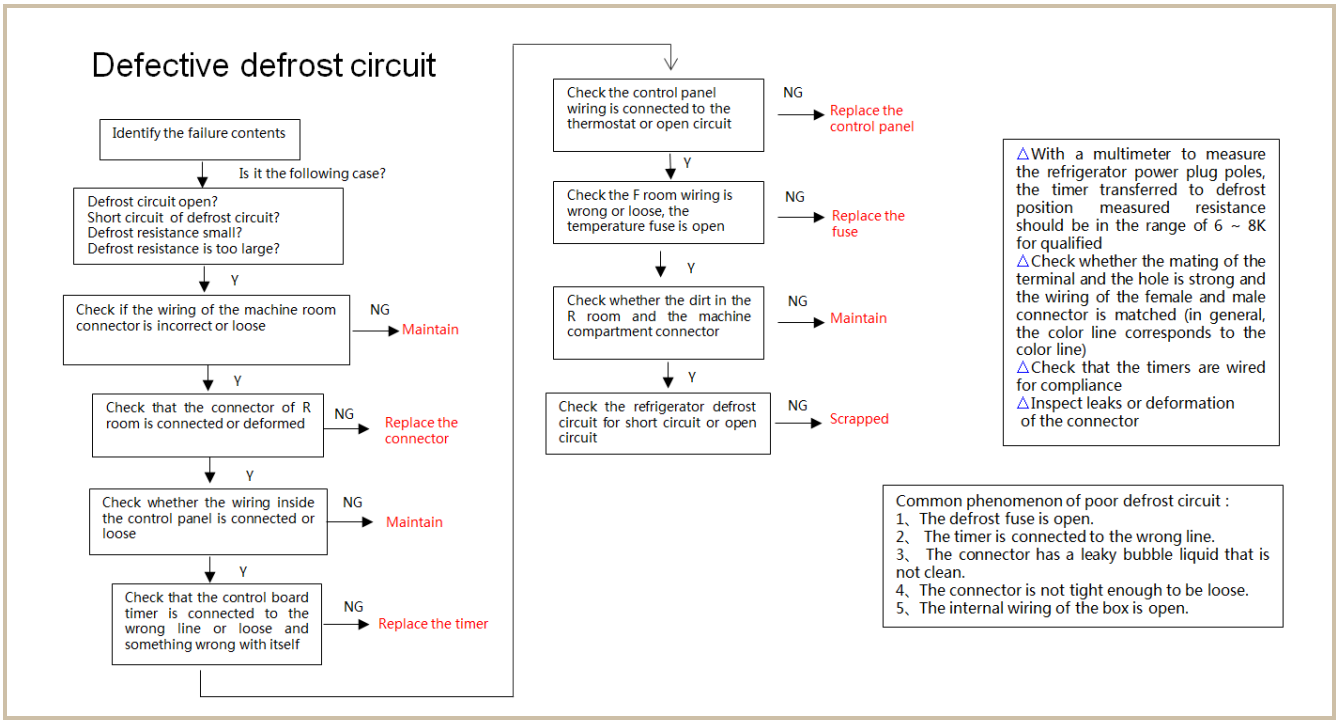


## 12.8Noise

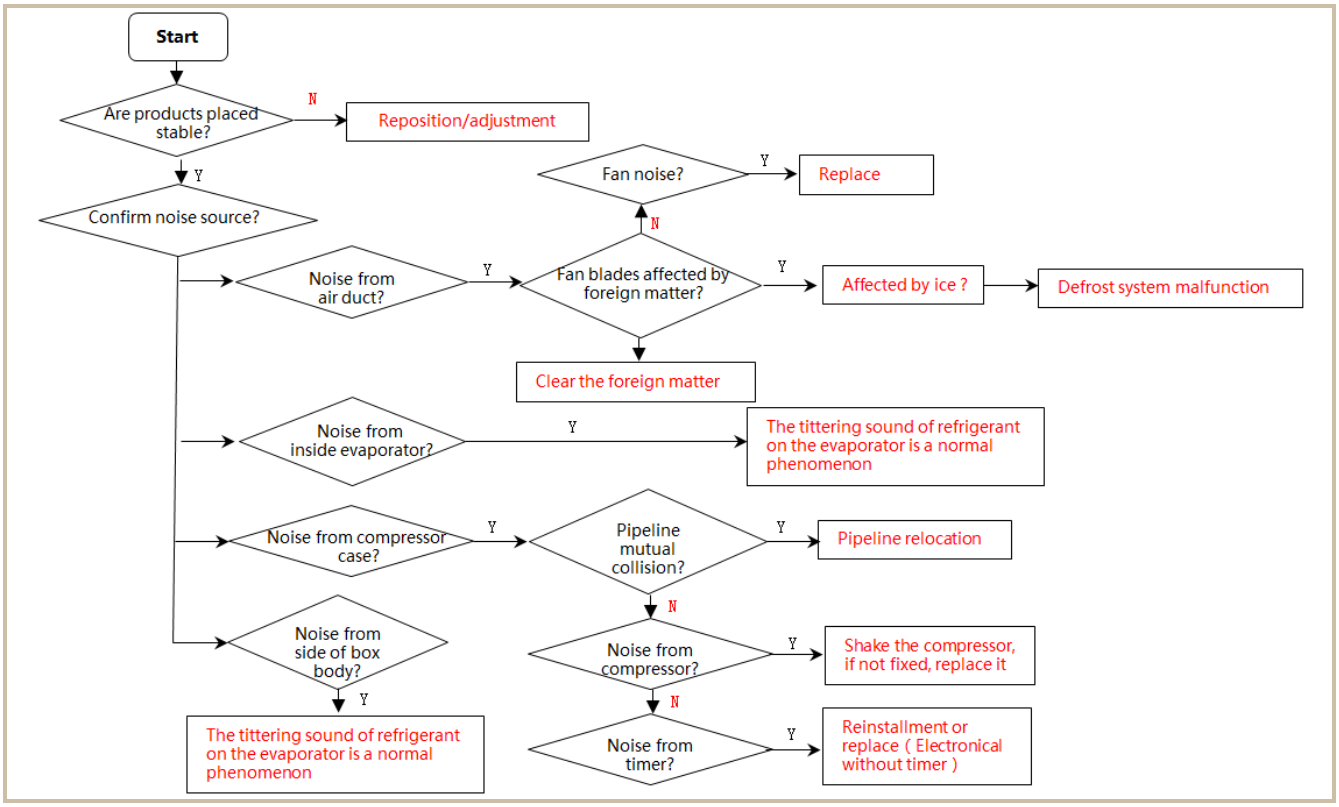

## 12.9Air duct not operated(electronically)

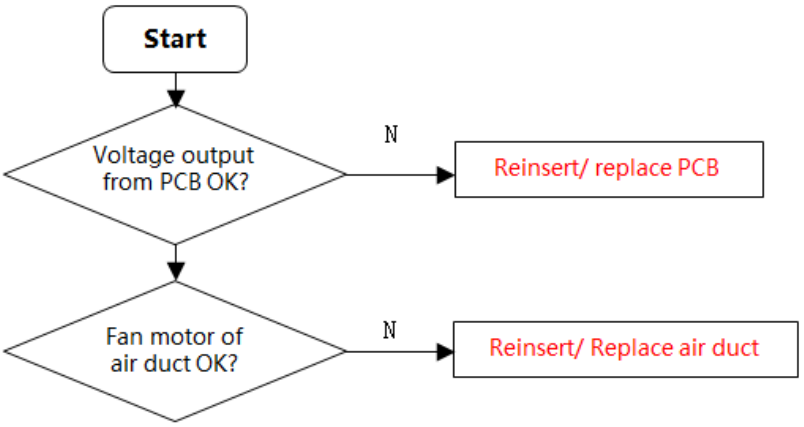


## 12.10ice maker not make ice

Keep pressing the “FRE” and “Energy Saving” button for 3s, enter/exit EYE.
Erter EYE, the display digital of ice machine mode will blink, and water gets into ice machine after turning over the ice twice.

## 13. Figures and details of repair parts

See this section in the TSP.

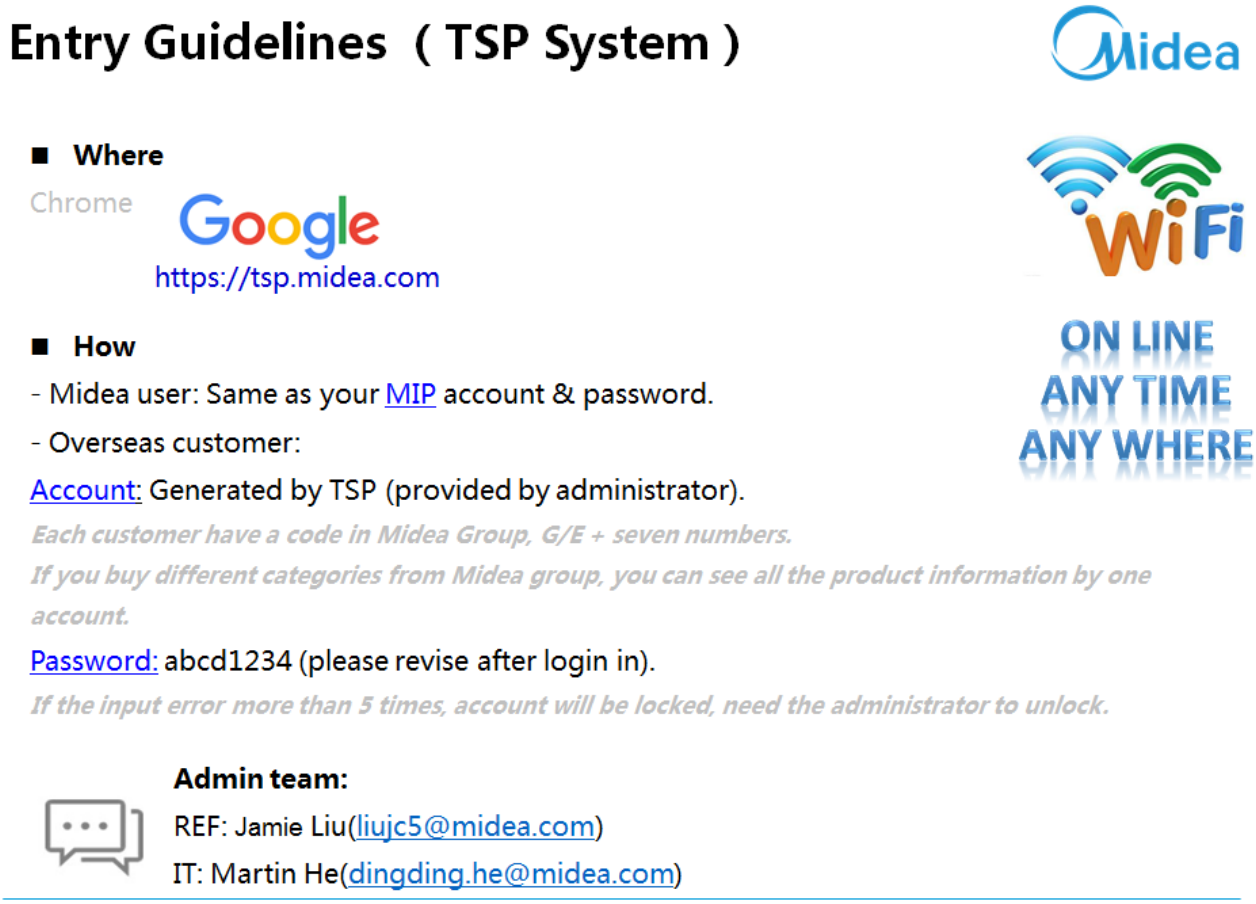



The symbol on the product or its packaging indicates that this product must not be disposed of with your other household waste. Instead, it is your responsibility to dispose of your waste equipment by handing it over to a designated collection point for the recycling of waste electrical and electronic equipment. The separate collection and recycling of your waste equipment at the time of disposal will help conserve natural resources and ensure that it is recycled in a manner that protects human health and the environment. For more information about where you can drop off your waste for recycling, please contact your local authority, or where you purchased your product.



## MIDEAappliances after sales website

For more information about Midea appliances after sales, please visit the ***tsp.midea.com***
For more information about the service manual, please visit the ***tsp.midea.com***
For more information about the EV and SBOM, please visit the ***tsp.midea.com***




## How to login TSP system

Use Google browser visit the ***https://tsp.midea.com/***
**Internal User:**
Use MIP account and Password.
**Customer:**
Access: Generated by TSP (provided by administrator).
Password: abcd1234 (please revise after login in).

# Midea Refrigerators

If you need to get detailed technical information from the manufacturer, please contact:

xxx@midea.com

**Refrigeration Division**
**Overseas Sales Company**
Address: No. 176, Jinxiu Avenue, Economic-Technological Development Area, Hefei, Anhui, China