VESTEL

VESTEL WHITE GOODS
CONSUMER SERVICE

VESTEL REFRIGERATOR
SERVICE MANUAL



VESTELMODEL :	MODEL :		CODE :
RT 260S	RD 26T	(GREECE / CARAD)	10010452

CONTENTS ***PAGE***

1. SPECIFICATIONS 1-2
2. ASSEMBLE & DISASSEMBLE
A - Changing the doorway direction to right hand 3-5
B - Changing the thermostat 6
C - Thermostat knob 6
3. REFRIGERANT CYCLE DIAGRAM 7
4. MACHINE ROOM VIEW 8
5. CIRCUIT DIAGRAM 8
6. INTERIOR PARTS 9
7. INTERIOR PARTS LIST 10
8. DOOR ASSY. PARTS 11
9. DOOR ASSY. PARTS LIST 12
10. UNIT PARTS 13
11. UNIT PARTS LIST 14

MAIN SPECIFICATIONS

	RD 26T
CLIMATE	T
DOOR COLOUR	WHITE
DOOR	2 SIDE AVAILABLE
DOOR INSULATION	CYCLOPENTAN
INSULATION	CYCLOPENTAN
LEVELLING FOOT	2
REFRIGERATOR GASKET	WHITE
FREEZER GASKET	WHITE

ELECTRICAL SPECIFICATIONS

	RD 26T
VOLTAGE/FREQUENCY	220-240 V / 50Hz
POWER OUTPUT	230 W
LAMP TYPE	E14
POWER CONSUMPTION	1.09 kWh/24h
CURRENT	0.8A
REFRIGERANT	R 134a
REFRIGERANT CHARGE	130 gr
ENERGY CLASS	B

COMPRESSOR

	RD 26T
COMPRESSOR TYPE	BPM1111Z(220-240V,50Hz)

RELAY

	RD 26T
RELAY TYPE	1260001 (V230)
THERMIC TYPE	T0062/26

TEMPERATURE CONTROL&DEFROST

	RD 26T
CAPILLARY LENGTH	0.66x3400 mm
DEFROST TYPE	Semi Automatic

TEMPERATURE CONTROL MAXIMUM (COLD)

	RD 26T
ON	+ 3.5 C
OFF	- 29 C

TEMPERATURE CONTROL MINIMUM (WARM)

	RD 26T
ON	+ 3.5 C
OFF	- 16.7 C

DIMENSIONS

	RD 26T
REFRIGERATOR VOLUME GROSS (l)	198
FREEZER VOLUME GROSS (l)	50
REFRIGERATOR VOLUME NET (l)	195
FREEZER VOLUME NET (l)	50
WEIGHT (kg)	45.4
HEIGHT (mm)	1440
DEPTH (mm)	600
WIDTH (mm)	540

PACKAGED DIMENSIONS

	RD 26T
WEIGHT (kg)	48.4
HEIGHT (mm)	1495
DEPTH (mm)	632
WIDTH (mm)	575

FREEZER ACCESSORY

	RD 26T
ICE SCRAPER	1
ICE TRAY	1
SHELF	1

REFRIGERATOR ACCESSORY

	RD 26T
CRISPER	1
CRISPER COVER	1
SHELF	3
TUNNEL DRAIN PLUG	1

DOOR ACCESSORY

	RD 26T
SHELF	6
SHELF SECTION	10
SHELF COVER	1
BOTTLE HOLDER WIRE	1
EGG HOLDER	1

A- Changing The Doorway Direction to Right Hand

1- Unscrew the two screws which are fixing the middle hinge and remove two big taps and one small tap. (FIG-1)

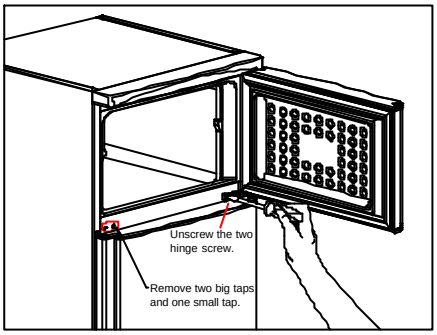

Figure - 1

2- Remove two doors by pulling towards to you with the middle hinge. (FIG-2)

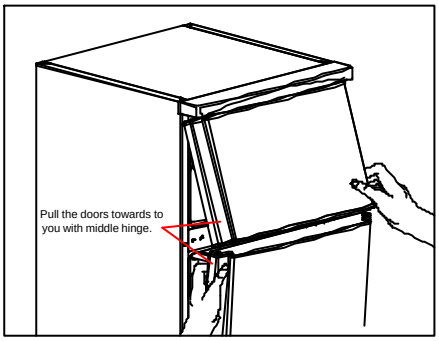

Figure - 2

3- Dismantle both levelling feet and loosen two screws,which are fixing the bottom hinge and dismantle the bottom hinge. (FIG-3)

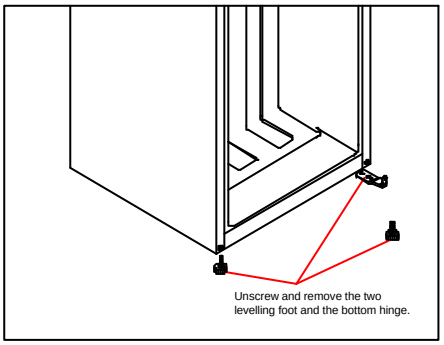

Figure - 3

A- Changing The Doorway Direction to Right Hand

4- Then change the placement of bottom hinge pin as shown below.Unscrew the hinge pin and screw in the next hole. (FIG-4)

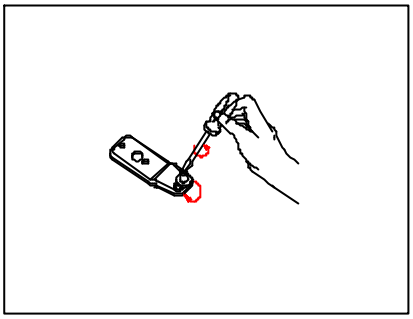

Figure - 4

5- Place the two big taps and one small tap as shown in the figure. (FIG-5)

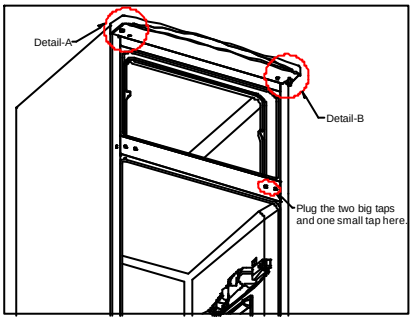

Figure - 5

6- Break this ear and cut circular hole.(FIG-6/Detail-A)
Unscrew and remove the tap hinge pin and screw on the top hinge on the left side. (FIG-6/Detail-B)

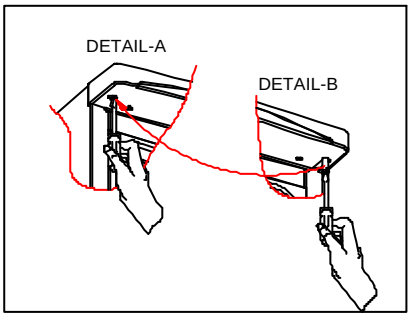

Figure - 6

A- Changing The Doorway Direction to Right Hand

7- Replace the bushing with the bushing cap on top of refrigerator door. Change the placement of bushing on the bottom of the refrigerator door. (FIG-7)
Replace the bushing with the bushing cap on top of freezer door. Change the placement of bushing on the bottom of the freezer door. (FIG-8)

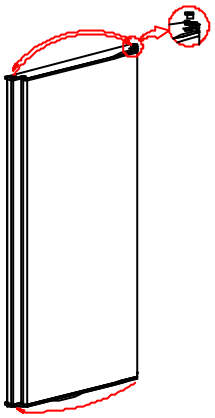

Figure - 7

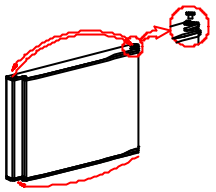

Figure - 8

8- Turn the middle hinge 180 clockwise direction. And then assemble with the two doors.Finally screw it on the left holes with two screws. (FIG-9)

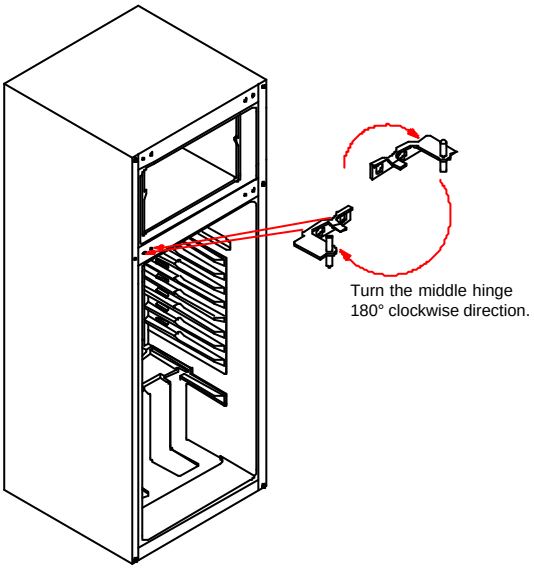

Figure - 9

Changing the thermostat

1) Take off the lamp cover and unscrew the fixing screw.
2) Take off screw cap and unscrew the fixing screw.
3) Take off the thermostat box by pulling and take off the wire connector.
4) Pull out the thermostat bulb from the cabinet.
5) Take off the thermostat knob pulling forward. Loosen the nut fixing the thermostat.
6) Replace the thermostat and assemble the thermostat box following the steps backwards. Be carefull to first mount the thermostat box to the cavity properly.

Thermostat Knob

- This knob is used to control the temperature of the freezer and refrigerator automatically. It can be set to any value between the min and max positions.
- 0 position indicates that the thermostat is off and so in this position no cooling is done.
- By turning the knob from min to max you can increase the cooling degree.
- The refrigerator is designed to get optimum perforformance when the thermostat knob is set in the middle position (between min and max).

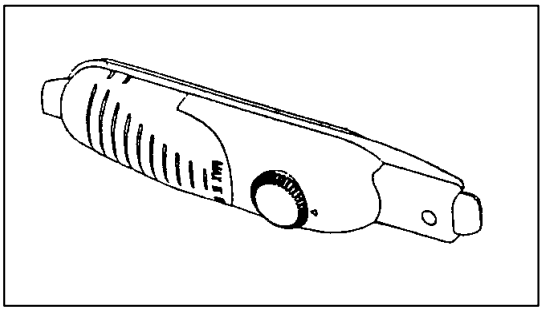

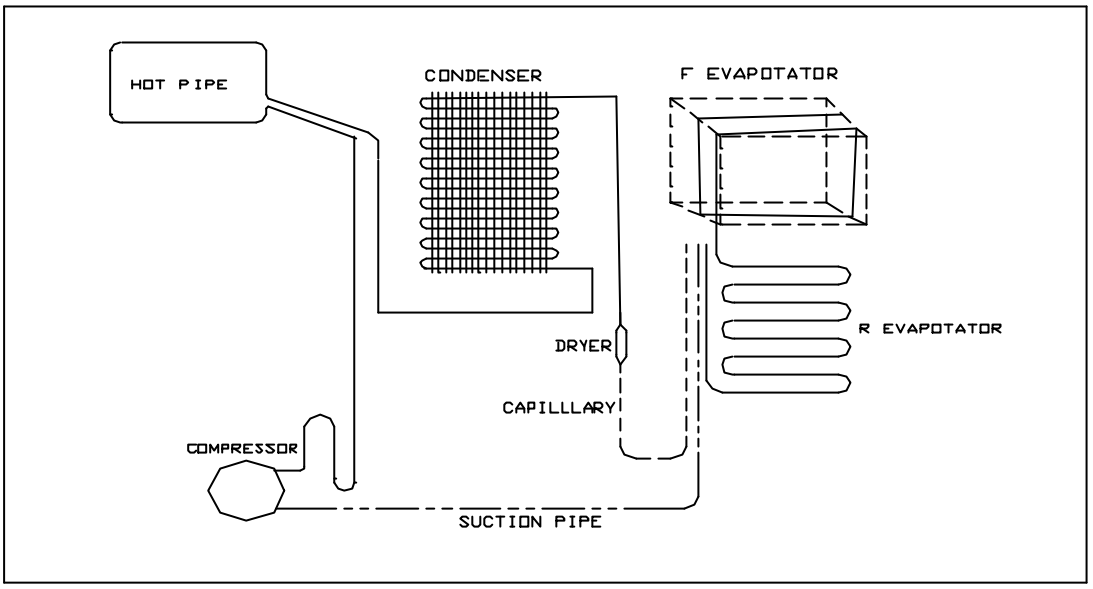
HOT PIPE
CONDENSER
F EVAPOTATOR
R EVAPOTATOR
DRYER
CAPILLLARY
COMPRESSOR
SUCTION PIPE

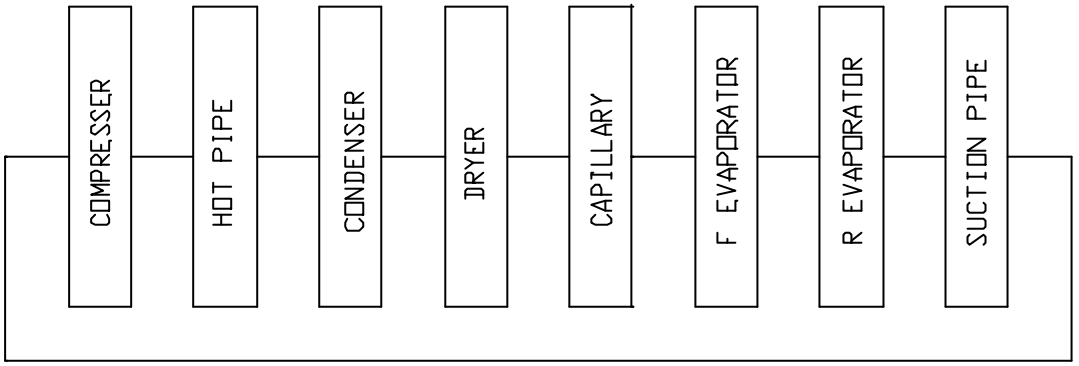
COMPRESSER
HOT PIPE
CONDENSER
DRYER
CAPILLARY
F EVAPORATOR
R EVAPORATOR
SUCTION PIPE

MACHINE ROOM VIEW

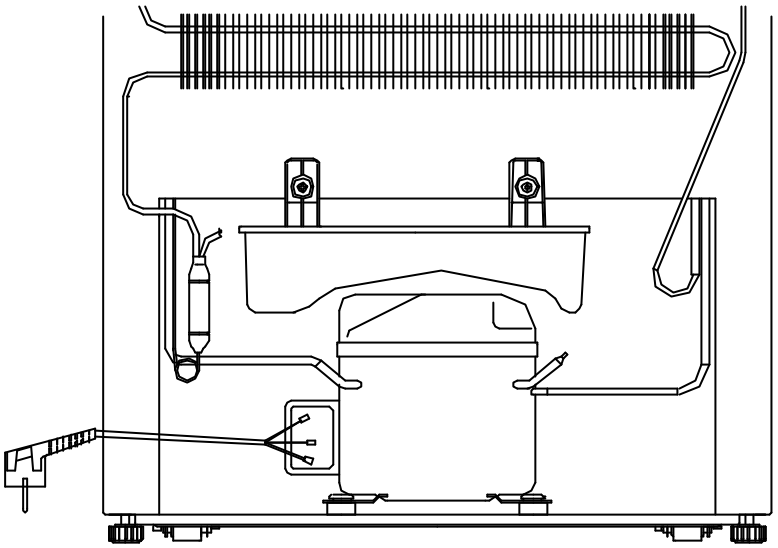

CIRCUIT DIAGRAM

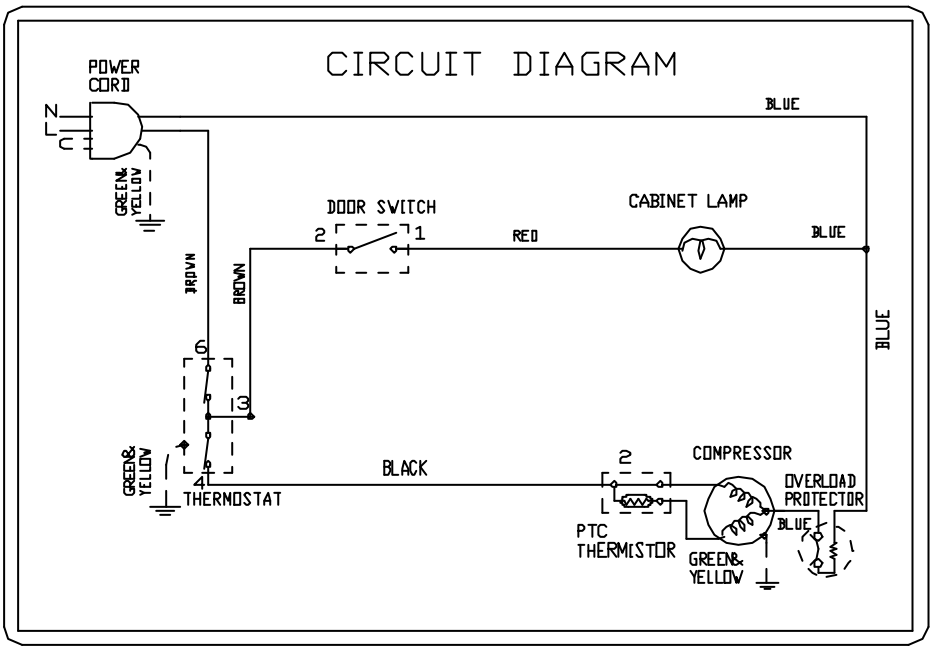

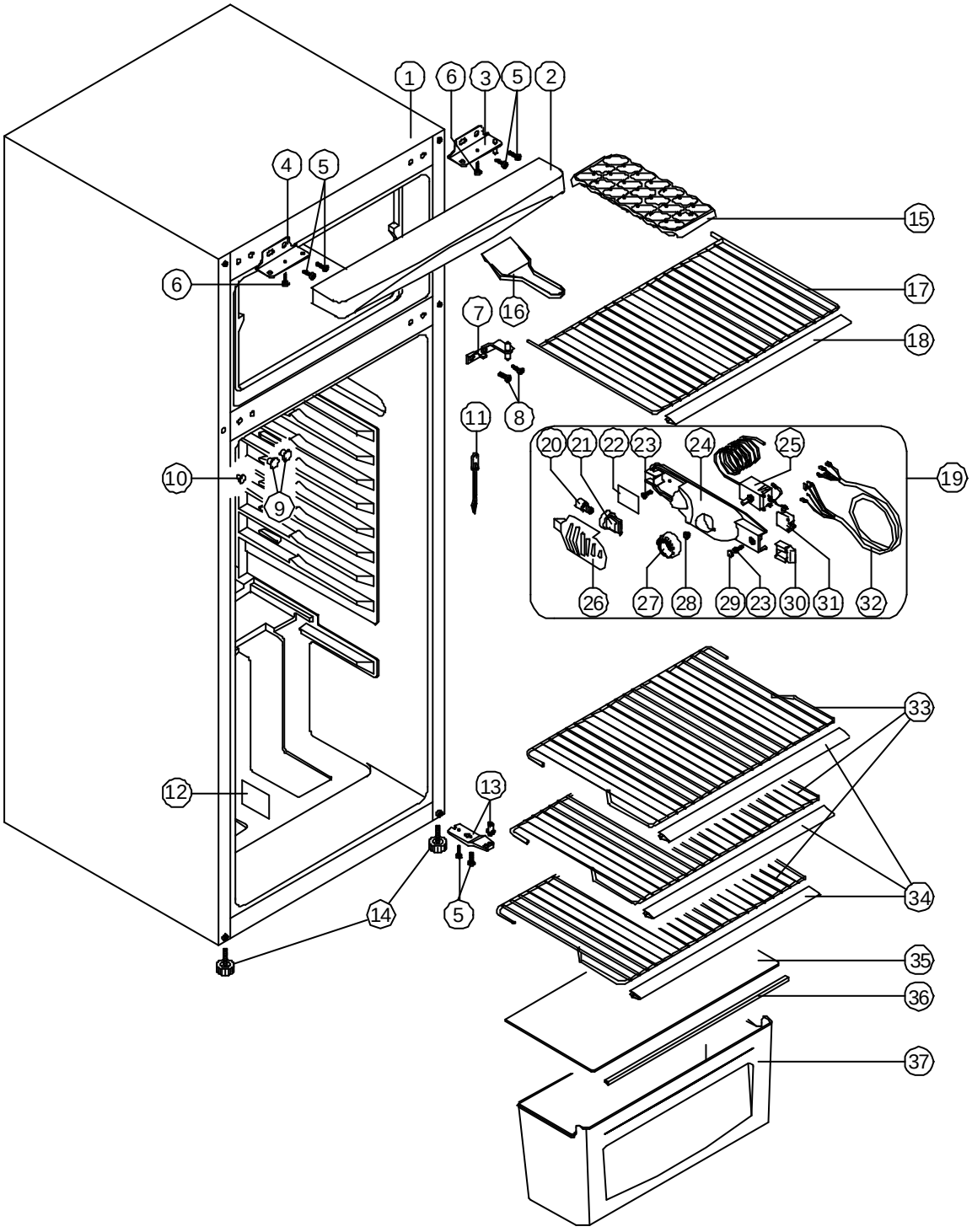
1
6
3
5
2
4
5
15
6
17
7
16
18
11
8
20
21
22
23
24
25
19
10
9
26
27
28
29
23
30
31
32
33
12
13
34
14
5
35
36
37

NO	CODE	PARTS NAME	RD 26T
1	20041377	ASSY URT CAB/260T	1
2	40006464	HEAD PANEL/260V	1
3	35004623	TOP HINGE/260V (WITH PIN) D.Ç.3,8	1
4	35004624	TOP HINGE/260V (WITHOUT PIN) D.Ç.3,8	1
5	35000714	SCREW M5*14 WN 1342-H EJOT	2
6	35001817	SCREW 4.2*9.5 WITH WASHER	2
7	35003428	MIDDLE HINGE DYED/260S	1
8	35001709	SCREW M5*14 WN 1342-H EJOT	2
9	40004843	CAP BIG	2
10	40004842	CAP SMALL	1
11	40002216	TUNNEL DRAIN PLUG	1
12	20073141	NAME PLATE /260T CARAD-ENG.(RD26T)	1
13	35003211	BOTTOM HINGE / 140V	1
14	45000563	LEVELLING FOOT	2
15	40002236	ICE TRAY	1
16	40002276	ICE SCRAPER	1
17	45000985	F COMPARTMENT SHELF/260	1
18	40003928	F SHELF TRIM/140(EXT)	1
19	30009610	THERMOSTAT BOX ASSY/260N	1
20	30007906	LAMP	1
21	30007907	LAMP HOLDER	1
22	45000976	HEAT REFLECTOR FOIL/140	1
23	35000744	SCREW 40*14 WN 1411 EJOT	2
24	40003899	THERMOSTAT BOX/140	1
25	30007921	THERMOSTAT (DNFS077B6575)	1
26	40003905	LAMP COVER/140	1
27	40008121	THERMOSTAT KNOB SRGF/260	1
28	35000730	SPRING	1
29	40003904	PLUG/140 THERM. BOX SCREW/140	1
30	40003901	SWITCH PUSH BUTTON	1
31	30011861	SWITCH	1
32	30009528	WIRING HARNESS/THERMOSTAT/260	1
33	45001966	R COMPARTMENT SHELF/260	3
34	40003913	R SHELF TRIM /140(EXT)	3
35	45000978	CRISPER COVER/140	1
36	40003914	CRISPER COVER TRIM/140(EXT)	1
37	20065270	CRISPER SRGF/140	1

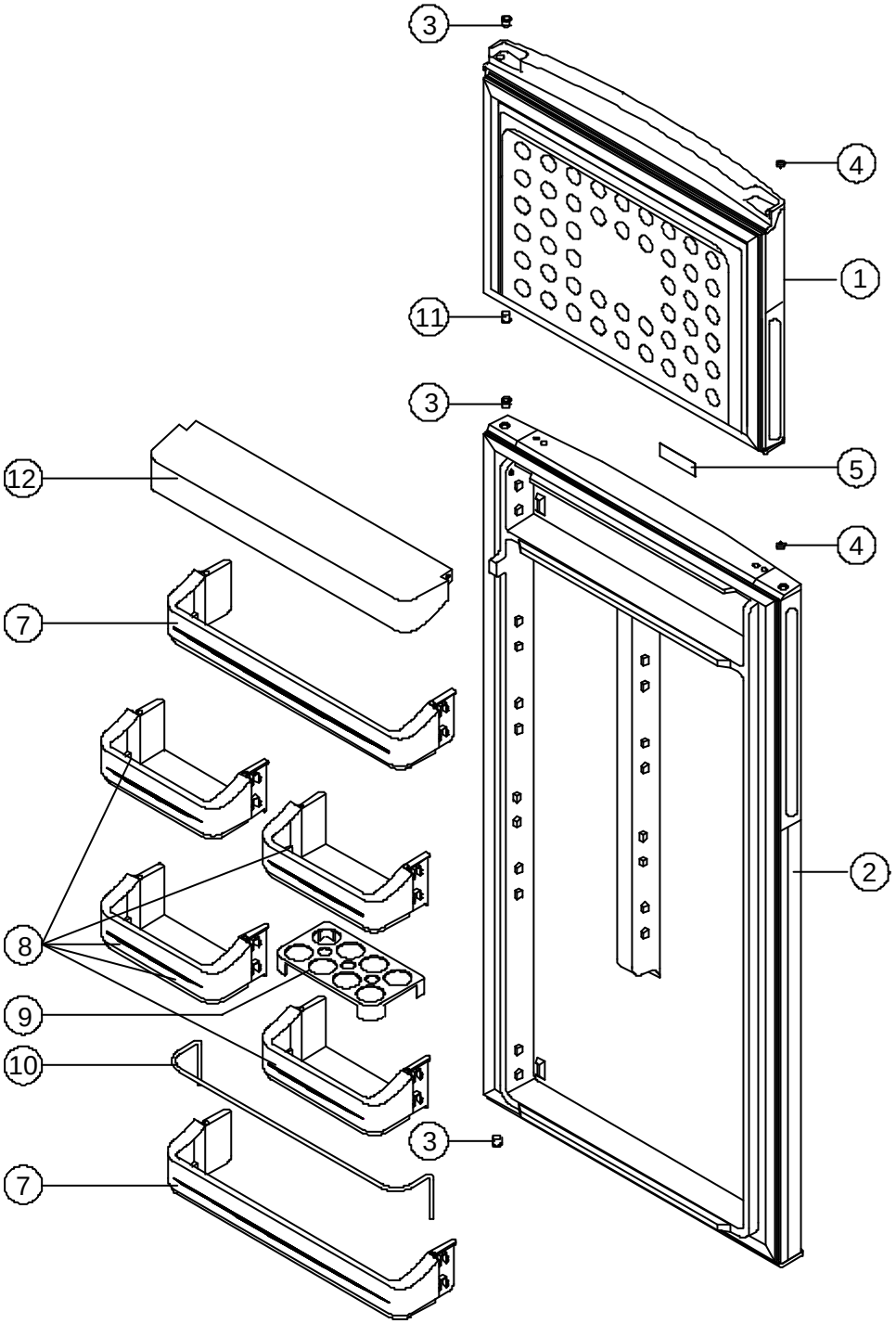
3
4
1
11
3
5
12
4
7
2
8
9
10
3
7

NO	CODE	PARTS NAME	RD 26T
1	20059509	F DOOR ASSY SRGF/260S	1
2	20059543	R DOOR ASSY/260S	1
3	40002242	BUSHING/345P	3
4	40002243	BUSHING CAP	2
5	45002336	LOGO CARAD	1
7	40006626	BOTTLE SHELF/140	2
8	40006625	EGG SHELF/140	4
9	40003910	EGG HOLDER/140 (BLUE)	1
10	35001838	BOTTLE HOLDER WIRE	1
11	40006640	BUSHING/345S	1
12	40003915	SHELF COVER/140	1

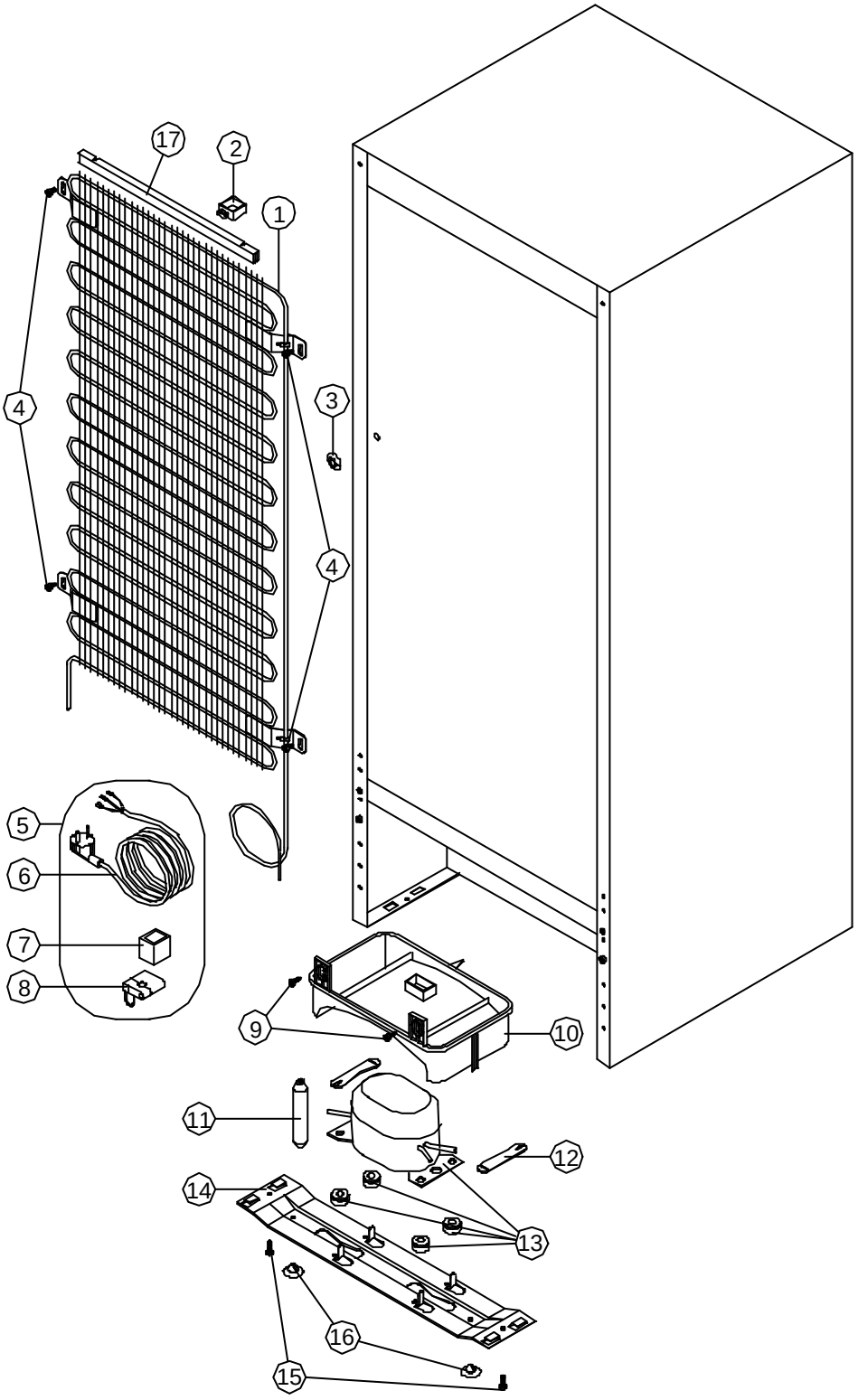
17
2
1
4
3
4
5
6
7
8
9
10
11
12
14
13
16
15

NO	CODE	PARTS NAME	RD 26T
1	35002813	MAIN CONDENSER/260T	1
2	40002180	SPACER	1
3	40003898	PLUG,CABLE HARNESS	1
4	35001817	SCREW 4.2*9.5 WITH WASHER	4
5	30009529	POWER CORD GR.BPM1111Z/260(50Hz)	1
6	30010202	POWER CORD (1.5m)	1
7	30009530	OVER LOAD RELAY GR.BPM1111Z(50Hz)260	1
8	40006235	CABLE HOLDER PLS/140	1
9	35000743	SCREW 4.2*9.5 DIN 7981 YSB	2
10	40003931	EVAPORATING TRAY/260	1
11	35002601	DRYER(XH9,7.5GR)	1
12	20020023	COMPRESSOR FIXING BRACKET	2
13	30009700	COMPRESSOR/BPM1111Z(220-240V,50Hz)260	1
14	20066212	COMPRESSOR BASEMENT/140 (UL)	1
15	35000714	SCREW M5*14 WN 1342-H EJOT	2
16	40003916	FOOT/140	2
17	40006285	CONDENSER TRIM / 140	1
	50012332	CIRCUIT DIAGRAM	1
	50021503	PACKAGE CARTOON/260	1
	50020998	STRAFOR BOTTOM/310	1
	50008955	STRAFOR TOP LEFT/140	1
	50008937	STRAFOR TOP RIGHT/140	1
	50018979	USER'S MANUEL/GREEK	1
	50020669	PACKAGE LABEL/260S(T)CARAD-ENG	1
	50020664	WARRANTY LABEL/CARAD	1
	50020670	ENERGY LABEL/260S(T)CARAD(RD26T)	1
	50007618	OZON FRIENDLY LABEL	1

REVISION SHORT HISTORY:

NO:	REV. NO:	REV. DATE:	PAGE NO:	REV. REASON
01	00	21.12.2001	All	First publication

DISTRIBUTION :

Greece-Carad	*Date: 28.12.2001*