FRIGIDAIRE

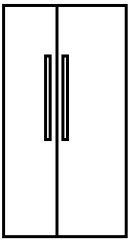

Refrigerator

use & care

Introduction....2
Important Safety Information....3
Features....6
Installation....7
Door Removal....10
Door Handle Installation....12
Water Supply Connection....13
Controls and Settings....15
Water Dispenser....16
Ice Maker....17
Storage Features....18
Normal Operating Sounds....19
Filter Replacement....20
Care and Cleaning....23
Troubleshooting....27
Limited Warranty....30

A28483801 (May 2024)

Welcome to our **family**

Thank you for bringing Frigidaire into your home! We see your purchase as the beginning of a long relationship together.

This manual is your resource for the use and care of your product. Please read it before using your appliance. Keep it handy for quick reference. If something doesn't seem right, the troubleshooting section will help you with common issues.

FAQs, helpful tips and videos, cleaning products, and kitchen and home accessories are available at Frigidaire.com.

We are here for you! Visit our website, chat with an agent, or call us if you need help. We may be able to help you avoid a service visit. If you do need service, we can get that started for you.

Let's make it official! Be sure to register your product.

Keep your product info here so it's easy to find.

Model Number _____

Serial Number _____

Purchase Date _____

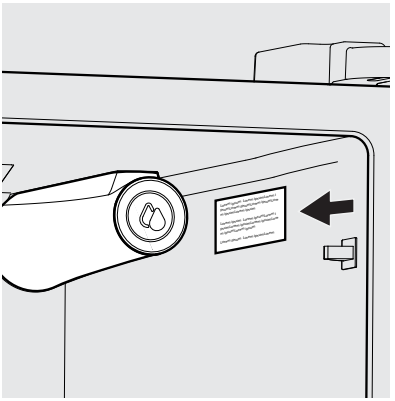

Serial Number Location

Installation Checklist

Doors

- ❒ Handles are secure and tight
- ❒ Door seals completely to cabinet on all sides
- ❒ Doors are level with each other.

Leveling

- ❒ Appliance is level side-to-side and tilted ¼" (6 mm) front-to-back
- ❒ Toe grille is properly attached.
- ❒ Cabinet is level on the floor.

Electrical Power

- ❒ House power turned on
- ❒ Appliance is plugged in

Ice Maker

- ❒ House water supply connected to appliance (**Warning:** Potable water supply only.)
- ❒ No water leaks present at all connections - recheck in 24 hours
- ❒ Ice maker is turned ON
- ❒ Ice & water dispenser operates correctly

Final Checks

- ❒ Shipping material removed
- ❒ Refrigerator and freezer temperatures set to recommended setting
- ❒ Crisper humidity controls set
- ❒ Registration card sent in

WARNING

Please read all instructions before using this appliance.

Safety Definitions

This is the safety alert symbol. It is used to alert of potential personal injury hazards. Obey all safety messages that follow this symbol to avoid possible injury or death.

DANGER

DANGER indicates an imminently hazardous situation which, if not avoided, will result in death or serious injury.

WARNING

WARNING indicates a potentially hazardous situation which, if not avoided, could result in death or serious injury.

CAUTION

CAUTION indicates a potentially hazardous situation which, if not avoided, may result in minor or moderate injury.

IMPORTANT

IMPORTANT indicates installation, operation or maintenance information which is important but not hazard-related.

DANGER



DANGER Risk of fire or explosion. Flammable refrigerant used. Do not use mechanical devices to defrost refrigerator. Do not puncture refrigerant tubing.

DANGER Risk of fire or explosion. Flammable refrigerant used. To be repaired only by trained service personnel. Use only manufacturer-authorized service parts. Any repair equipment used must be designed for flammable refrigerants. Follow all manufacturer repair instructions. Do not puncture refrigerant tubing.

CAUTION



CAUTION Risk of fire or explosion. Dispose of refrigerator properly in accordance with the applicable federal or local regulations. Flammable refrigerant used.

CAUTION Risk of fire or explosion due to puncture of refrigerant tubing. Follow handling instructions carefully. Flammable refrigerant used.

WARNING

CALIFORNIA RESIDENTS ONLY
Cancer and Reproductive Harm
www.P65Warnings.ca.gov

IMPORTANT SAFETY INFORMATION

Child Safety

This appliance is not intended for use by persons (including children) with reduced physical, sensory or mental capabilities, or lack of experience and knowledge, unless they have been given supervision or instruction concerning use of the appliance by a person responsible for their safety.

Destroy or recycle the carton, plastic bags, and any exterior wrapping material immediately after the appliance is unpacked. Children should never use these items to play. Cartons covered with rugs, bedspreads, plastic sheets or stretch wrap may become airtight chambers, and can quickly cause suffocation.

Safety Instructions

- DO NOT store or use gasoline, or other flammable liquids, or aerosols within or in the vicinity of this or any other appliance. Read product labels for warnings regarding flammability and other hazards.
- DO NOT operate the unit in the presence of explosive fumes.
- Avoid contact with any moving parts of automatic ice maker.
- Remove all staples from the carton. Staples can cause severe cuts, and also destroy finishes if they come in contact with other appliances or furniture.

WARNING

Do not use electrical appliances inside the food storage compartments of the appliance unless they are of the type recommended by the manufacturer.

Proper Disposal of your Appliance

Risk of child entrapment

Child entrapment and suffocation are not problems of the past. Junked or abandoned appliances are still dangerous – even if they will sit for “just a few days”. If you are getting rid of your old unit, please follow the instructions below to help prevent accidents.

We strongly encourage responsible appliance recycling/disposal methods. Check with your utility company or visit energystar.gov/recycle for more information on recycling your old appliance.

Before you throw away your appliance:

- Remove doors.
- Leave shelves in place so children may not easily climb inside.
- Have refrigerant removed by a qualified service technician.

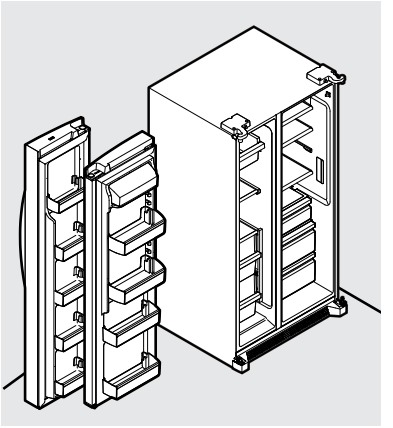

IMPORTANT

CFC/HCFC Disposal

Your old unit may have a cooling system that used CFCs or HCFCs (chlorofluorocarbons or hydrochlorofluorocarbons). CFCs and HCFCs are believed to harm stratospheric ozone if released to the atmosphere. Other refrigerants may also cause harm to the environment if released to the atmosphere.

If you are throwing away your old appliance, make sure the refrigerant is removed for proper disposal by a qualified technician. If you intentionally release refrigerant, you may be subject to fines and imprisonment under provisions of environmental legislation.

WARNING

These guidelines must be followed to ensure that safety mechanisms in this unit will operate properly.

Electrical information

- **The appliance must be plugged into its own dedicated 115 Volt, 60 Hz., 15 Amp, AC only electrical outlet.** The power cord of the appliance is equipped with a three-prong grounding plug for your protection against electrical shock hazards. It must be plugged directly into a properly grounded 3-prong receptacle. The receptacle must be installed in accordance with local codes and ordinances. Consult a qualified electrician. Avoid connecting the unit to a Ground Fault Interrupter (GFI) circuit. **Do not use an extension cord or adapter plug.**
- If the power cord is damaged, it should be replaced by an authorized service technician to prevent any risk.
- Never unplug the appliance by pulling on the power cord. Always grip the plug firmly, and pull straight out from the receptacle to prevent damaging the power cord.
- Performance may be affected if the voltage varies by 10% or more. Operating the appliance with insufficient power can damage the compressor. Such damage is not covered under your warranty.
- Do not plug the unit into an electrical outlet controlled by a wall switch or pull cord to prevent the unit from being turned off accidentally.

IMPORTANT

Turn off power to your appliance you must unplug the power cord from the electrical outlet.

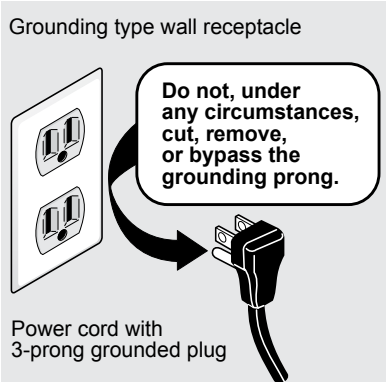

CAUTION

To avoid personal injury or property damage, handle tempered glass shelves carefully. Shelves may break suddenly if nicked, scratched, or exposed to sudden temperature change.

FEATURES

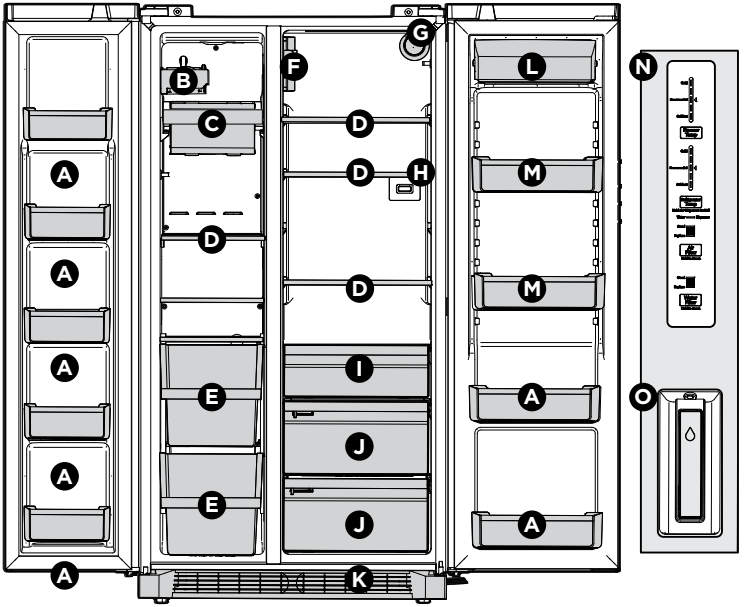

A	Fixed Door Bins
B	Ice Maker
C	Ice Container
D	Glass Shelves
E	Freezer Bins
F	Damper/Air Filter Housing
G	Water Filter
H	Temperature Sensor/Thermistor

I	Deli Drawer
J	Crispers
K	Toe Grille
L	Dairy Compartment
M	Adjustable Door Bins
N	Appliance Control Display
O	Side-Door Dispenser

IMPORTANT

Accessories are available for your appliance and may be purchased at Frigidaire.com or by calling 1-800-374-4432 (Frigidaire.ca or 1-800-265-8352 in Canada) or from an authorized seller.

This Use & Care Manual provides general operating instructions for your model. Use the unit only as instructed in this Use & Care Manual. **Before starting the appliance, follow these important first steps.**

Location

- Choose a place that is near a grounded electrical outlet. **Do Not** use an extension cord or an adapter plug.
- If possible, place the unit out of direct sunlight and away from the range, dishwasher or other heat sources.
- Install the appliance on a floor that is level and strong enough to support a fully loaded unit.
- Consider water supply availability for models equipped with an automatic ice maker. If you do not hook up water to the appliance, remember to turn the ice maker off.

WARNING

This appliance is intended for use in residential household and similar interior applications such as:

- a kitchen/kitchenette
- a pantry room
- a basement
- an enclosed garage
- other interior residential-type environments

CAUTION

Do Not install the unit where the temperature will drop below 55°F (13°C) or rise above 110°F (43°C). The compressor will not be able to maintain proper temperatures inside the appliance.

Do Not block the toe grille on the lower front of your unit. Sufficient air circulation is essential for the proper operation of your appliance.

Installation

Installation clearances

- Allow the following clearances for ease of installation, proper air circulation, and plumbing and electrical connections:

Sides & Top	⅜″
Back	1″

NOTE

If your unit is placed with the door hinge side against a wall, you may have to allow additional space for the handle so the door can be opened wider.

Toe Grille Installation and Removal

To install toe grille

1. Open both doors. Slide the left and right sides of the toe grille over the lower hinges of the appliance.
2. While pushing the toe grille firmly against cabinet, fasten the bottom clips of toe grille to the cabinet.
3. Fasten the top clips to the cabinet.
4. Close the doors. Fasten the right and left side clips into the groove of the bottom hinge.

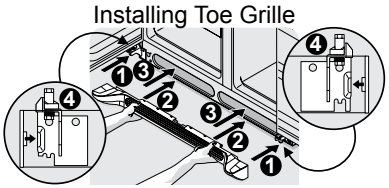

To remove the toe grille

1. With both doors closed, unfasten the right and left side clips of toe grille from the bottom hinge groove.
2. Open both doors. Press firmly on the top of the toe grille until the top of the toe grille pops off.
3. Pull the toe grille outward toward your body and off of the lower hinges.

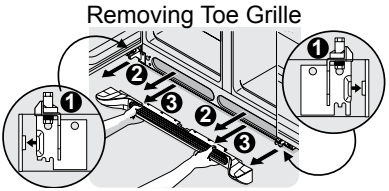

Door Opening

NOTE

The doors are designed to shut by themselves within a 20 degree opening.

Position your unit to allow easy access to a counter or table when removing food. For the best use of drawers and freezer baskets, position the appliance where both doors can fully open.

Guidelines for final positioning of your unit:

- Rest all 4 corners of the cabinet firmly on the floor.
- Level the cabinet at the front and rear so the front is raised ¼" (6 mm) above the rear to ensure the door will open/close and seal properly.
- Align the doors with each other and level.

Meet all of these conditions by raising or lowering the adjustable leveling feet.

To level the cabinet using the front leveling feet:

1. Open both doors and remove the toe grille (see **Toe Grille Installation and Removal** in the **INSTALLATION** section).
2. Level the cabinet at the front and rear so the front is raised ¼" (6 mm) above the rear. Close the doors. Use an adjustable wrench to loosen the feet (A). Once you have lowered the leveling feet slightly, use the wrench on the nut (B) to lower (counterclockwise) or raise (clockwise) the front of the cabinet ensuring the unit is sitting flat on the floor.

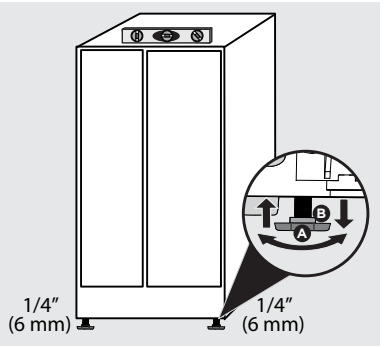

3. Ensure both doors are bind free with their seals touching the cabinet on all 4 sides.

To level the doors using the adjustable lower hinge:

1. Before leveling either door, remove the set screw that locks the door height into position using a $^{3}/_{32}$ hex key.

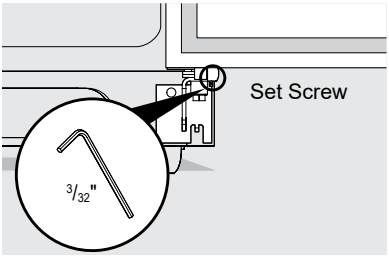

2. If the freezer door is lower than the refrigerator door (A) or the refrigerator door is lower than the freezer door (B), raise the door by turning the adjustment screw clockwise using a 10 mm wrench.

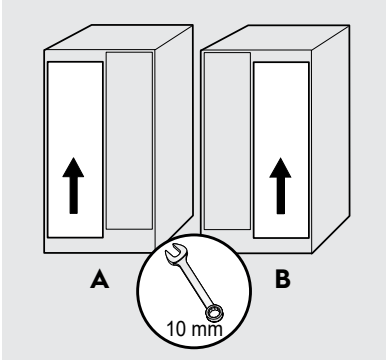

3. After leveling, verify the door stop contacts the lower hinge and the top of the door does not contact the upper hinge through full movement of the door (from fully closed to fully open).

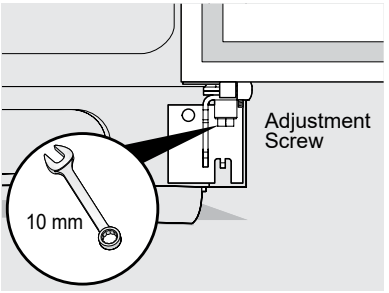

4. Reinstall the set screw, locking the door height.
5. Replace the toe grille by fitting it into place (see **Toe Grille Installation and Removal** in the **INSTALLATION** section).

10 DOOR REMOVAL

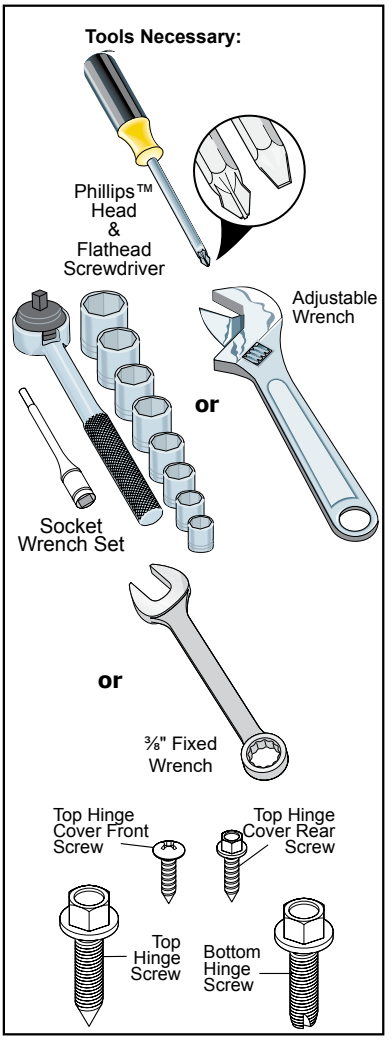

To prepare for removing the doors:

1. Make sure the electrical power cord is unplugged from the wall outlet.
2. Open both doors and remove the toe grille (as explained in the Installation Instructions that came with your appliance).
3. Remove any food from the door shelves.
4. Close the doors.

To remove the freezer door:

1. Remove the 3 screws from the cover over the top door hinge.
2. Lift hinge cover straight up and off.
3. Trace lightly around the door's top hinge with a pencil. This makes reinstallation easier. Remove the 2 screws from the top hinge. Lift the door off of the bottom hinge and set it aside.

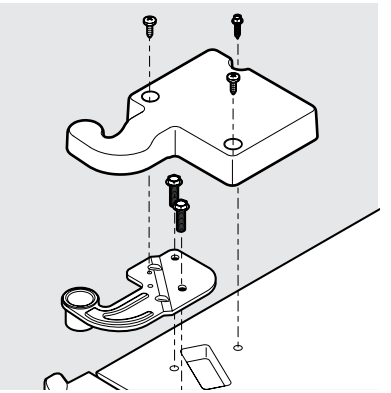

4. Remove the 2 bottom hinge screws and hinge if necessary.

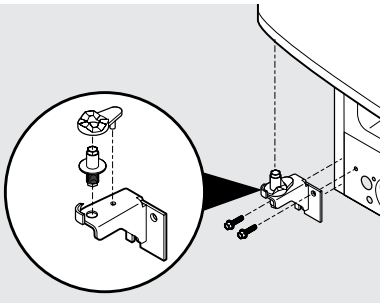

Adjustable Hinge

To reinstall the freezer door, reverse the above steps.

To remove the refrigerator door:

1. Remove the 3 screws from the cover over the door hinge.
2. Lift hinge cover straight up and off.
3. Release the wires from the routing clip. Disconnect the multi-wire cable connector located above the top hinge. Press the cable and lock and separate the 2 cables.

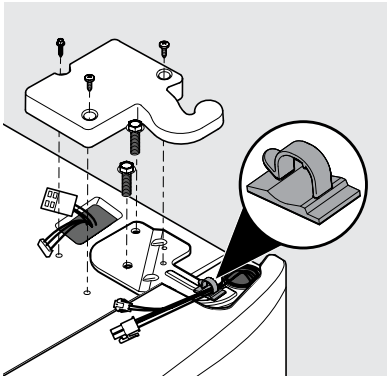

IMPORTANT

To prevent wire damage, ensure the wires are rerouted through the routing clip when reassembling the hinge cover.

4. Trace lightly around the hinge with a pencil. This makes reinstallation easier.
5. Remove the toe grille (see **Toe Grille Installation and Removal**).
6. Detach the water tube from the connector located below the freezer door. The connector releases when you press its outer sleeve inward.

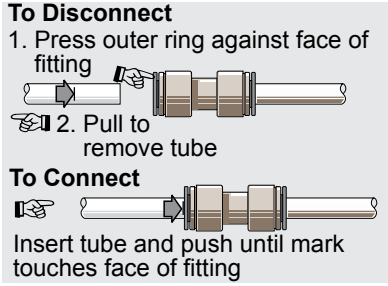

7. Remove the 2 screws from the top hinge. Remove the hinge pulling the multi-wire cable through it. Lift the door off the bottom hinge.

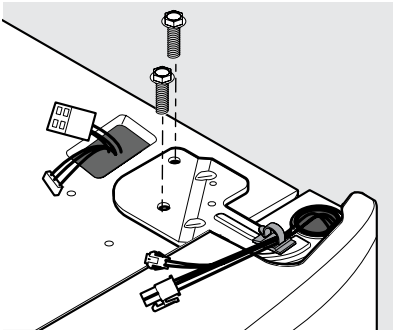

8. Remove the 2 bottom hinge screws and hinge if necessary.

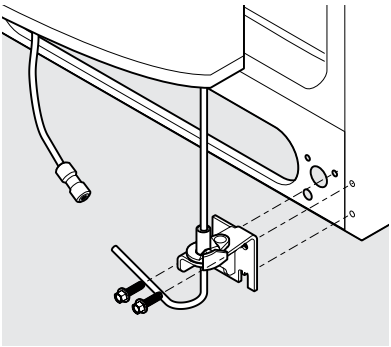

9. Lay the door on its side to avoid damage to the water tube extending from the bottom hinge.

To reinstall the refrigerator door, reverse the above steps.

CAUTION

Be sure doors are set aside in a secure position where they cannot fall and cause personal injury.

12 DOOR HANDLE INSTALLATION

Handles may vary according to model

CAUTION

Wear gloves and safety goggles and use extreme CAUTION when installing these handles. The rounded end of the handles may be sharp (some models).

IMPORTANT

To ensure proper installation of handles, please review these instructions and illustrations thoroughly prior to installing the handles.

1. Remove handles from carton and any other protective packaging.
2. Position the freezer handle end caps over the upper and lower pre-installed shoulder bolts (A) that are fastened into door, ensuring the holes for the set screws are facing toward the refrigerator door.
3. While holding the handle firmly against door, fasten the upper and lower Allen set screws (B) with the supplied Allen wrench.
4. Repeat steps 2 and 3 to install refrigerator handle. Ensure the holes for the set screws are facing towards the freezer door.

NOTE

Tighten and sub-flush all set screws (place the Allen set screw just below the surface of the end cap) of the handle end cap. Draw the end caps tight to the freezer and refrigerator doors with no gaps. To avoid scratching the metal door, keep the door open while torquing down the set screws.

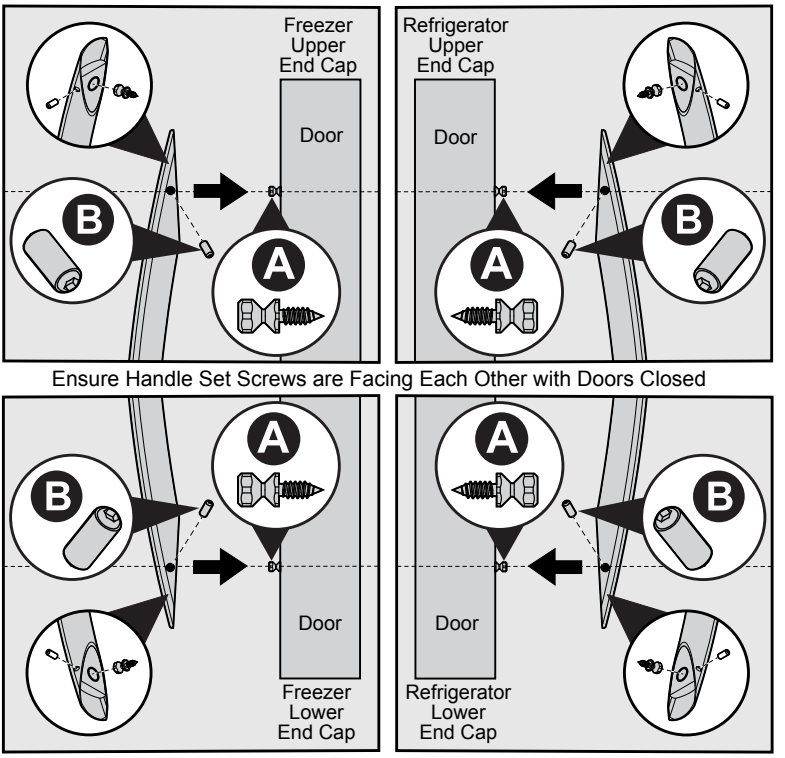

WARNING

To avoid electric shock, which can cause death or severe personal injury, disconnect the unit from electrical power source before connecting a water supply line to the appliance.

CAUTION

To Avoid Property Damage:

- Use Copper or Stainless Steel braided tubing for the water supply line. Frigidaire does not recommend water supply tubing made of ¼" plastic. Plastic tubing greatly increases the potential for water leaks, and the manufacturer will not be responsible for any damage if plastic tubing is used for the supply line.
- DO NOT install water supply tubing in areas where temperatures fall below freezing.
- Chemicals from a malfunctioning softener can damage the ice maker. If the ice maker is connected to soft water, ensure that the softener is maintained and working properly.

IMPORTANT

Ensure your water supply line connections comply with all local plumbing codes.

Before Installing The Water Supply Line, You Will Need:

- Basic Tools: adjustable wrench, flat-blade screwdriver, and Phillips™ screwdriver
- Access to a household cold water line with water pressure between 30 and 100 psi.
- A water supply line made of ¼" (6.4 mm) OD, copper or stainless steel tubing. To determine the length of tubing needed, measure the distance from the ice maker inlet valve at the back of the refrigerator to your cold water pipe. Then add approximately 7′ (2.1 m), so the refrigerator can be moved out for cleaning.
- A shutoff valve to connect the water supply line to your household water system. DO NOT use a self-piercing type shutoff valve.
- Do not reuse compression fitting or use thread seal tape.
- A compression nut and ferrule (sleeve) for connecting a copper water supply line to the ice maker inlet valve.

NOTE

Check with your local building authority for recommendations on water lines and associated materials prior to installing your new refrigerator. Depending on your local/state building codes, we recommend for homes with existing valves its **Smart Choice**® water line kit 5304490728 (with a 6′ Stainless Steel Water Line) and for homes without an existing valve, we recommend **Smart Choice**® water line kit 5304490717 (with a 20′ copper water line with self-tapping saddle valve). Please refer to Frigidaire.com for more information.

To Connect Water Supply Line To Ice Maker Inlet Valve

1. Disconnect the refrigerator from electrical power source.
2. Place the end of the water supply line into a sink or bucket. Turn ON the water supply and flush the supply line until the water is clear. Turn OFF the water supply at the shutoff valve.
3. Remove the plastic cap from the water valve inlet and discard the cap.
4. **If you use copper tubing** - Slide the brass compression nut, and then the ferrule (sleeve) onto the water supply line. Push the water supply line into the water valve inlet as far as it will go (¼"/6.4 mm). Slide the ferrule (sleeve) into the valve inlet and finger tighten the compression nut onto the valve. Tighten another half turn with a wrench; DO NOT overtighten. See Figure 1.

WATER SUPPLY CONNECTION

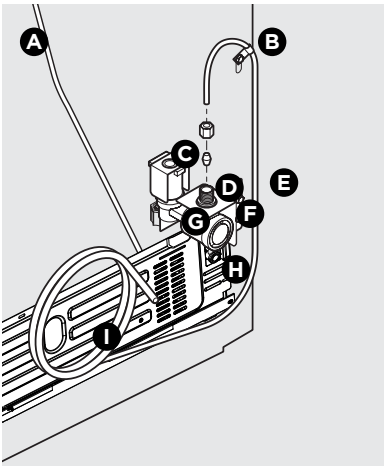

Figure 1

If you use braided flexible stainless steel tubing - The nut is already assembled on the tubing. Slide the nut onto the valve inlet and finger tighten the nut onto valve. Tighten another half turn with a wrench; DO NOT overtighten. See Figure 2.

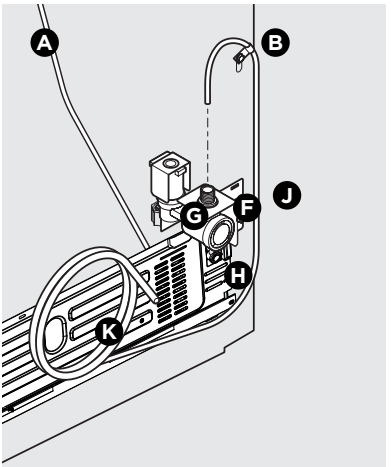

Figure 2

A	Plastic Water Tubing to Ice Maker Fill Tube
B	Steel Clamp
C	Brass Compression Nut
D	Ferrule (Sleeve)
E	Copper Water Line
F	Water Valve Bracket
G	Valve Inlet
H	Water Valve
I	Copper Water Line from Household Water Supply*
J	Braided Flexible Stainless Steel Water Line
K	6 ft. (1.8 m) Braided Flexible Stainless Steel Water Line from Household Water Supply*

*Include enough tubing in the loop to allow moving the refrigerator out for cleaning

5. With the steel clamp and screw, secure the water supply line (copper tubing only) to the rear panel of refrigerator as shown.
6. Coil the excess water supply line (copper tubing only), about 2½ turns, behind refrigerator as shown and arrange coils so they do not vibrate or wear against any other surface.
7. Turn ON the water supply at shutoff valve and tighten any connections that leak.
8. Reconnect the refrigerator to electrical power source.

IMPORTANT

After connecting the water supply, refer to **Priming the Water Supply System** for important information about priming an empty water supply system.

Your refrigerator's water supply system includes several tubing lines, a water filter, and a water valve. To ensure that your water dispenser works properly, completely fill this system with water when you first connect your refrigerator to the household water supply line.

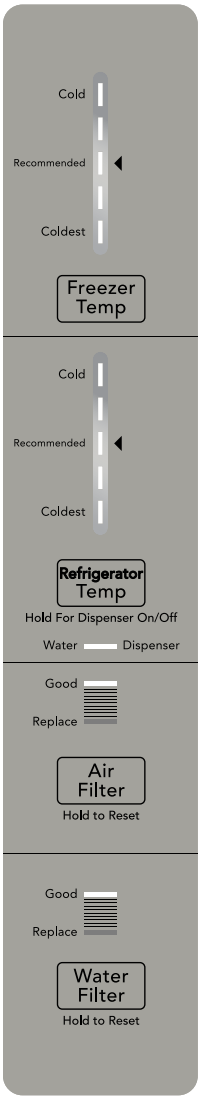

In-Door Control Display Mode Views

Your display is equipped with a sleep and inactive mode to prevent accidental changes to the unit settings during opening and closing of the doors. When both doors are closed, the display is in sleep mode. When either door is first opened, the display is in inactive mode where all the current settings are visible but dimmed.

Pressing any button on the display activates the display and a tone plays. All settings are then fully lit. Touch the display again to change any setting.

If you do not press a button for 10 seconds while any door is open, the display defaults back to inactive mode.

Temperature Adjustment

Adjust the temperature gradually: adjust in small increments, allowing the temperature to stabilize.

- For colder temperatures, press **Temp** to change the temperature setting toward **Coldest**.

NOTE: After you select Coldest, the next setting will loop back to Cold (at the top), and then back toward Coldest (at the bottom) with each press.

- For warmer temperatures, press **Temp** to change the temperature setting toward **Cold**.

Adjusting the refrigerator control changes the temperature in both compartments. The freezer control can be left at the factory preset (*__Recommended__) or adjusted as desired.

To maintain temperatures, a fan circulates air in the refrigerator and freezer compartments. For good circulation, do not block cold air vents with food items.

Water Dispenser

Press and hold **Refrigerator Temp** to enable/ disable the water dispenser. When enabled, the light between **Water Dispenser** illuminates.

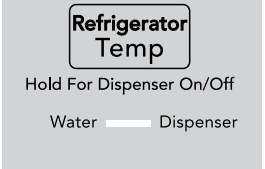

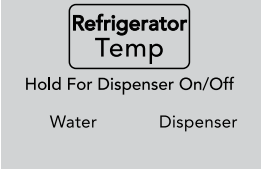

Air Filter Status

The display shows the current status of the air filter (**Good**, **Order**, or **Replace**). To reset the filter status to **Good**, press and hold **Air Filter** for 3 seconds.

Water Filter Status

The displays shows the current status of the water filter (**Good**, **Order**, or **Replace**). To reset the filter status to **Good**, press and hold **Water Filter** for 3 seconds.

16 WATER DISPENSER

Priming the water supply system

CAUTION

For proper dispenser operation, the recommended water supply pressure should fall between 30 psi and 100 psi. Excessive pressure may cause the system to malfunction.



Dispenser

1. Begin filling the system by pressing and holding a drinking glass against the water dispenser paddle.
2. Keep the glass in this position until water comes out of the dispenser. It may take about 1½ minutes. Water will sputter until you purge all air from the water lines.
3. Continue dispensing water for about 4 minutes to flush the system and plumbing connections of any impurities (stopping to empty the glass as necessary).

NOTE

Dispensed water is not chilled. For colder water, add ice to cup or container before dispensing water.

NOTE

The water dispenser has a built-in device that shuts off the water flow after 3 minutes of continuous use. To reset this shutoff device, simply release the dispenser paddle.

Ice maker operation & care

After you properly install the refrigerator, it takes up to 48 hours to cool down. The ice maker can start to produce ice after cool down is complete.

Turning the ice maker on

To turn the ice maker on, press the ice maker's On/Off power switch, located at the bottom of the ice maker, so the LED illuminates steadily.

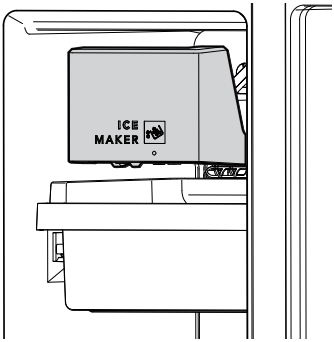

NOTE

The ice maker also has a built-in plastic signal arm that automatically stops ice production when the ice bin is full. Do not use this signal arm to manually stop the ice maker.

Ice Maker Tips

- Ice cubes stored too long may develop an odd flavor. Empty the ice container as explained in **Cleaning the Ice Storage Bin**.
- Occasionally shake the ice container to keep ice separated.
- If your refrigerator is not connected to a water supply or the water supply is turned off, turn **Off** the ice maker.
- The following sounds are normal when the ice maker is operating:
  - Motor running
  - Ice dropping into ice container
  - Water valve opening or closing
  - Ice loosening from tray
  - Running water
- Turn **Off** the ice maker when cleaning the freezer and during vacations. If you turn **Off** the ice maker for a long period of time, you should also turn off the water supply valve.

CAUTION

Chemicals from a malfunctioning water softener can damage the ice maker. If the water supply to your refrigerator is softened, be sure the softener is maintained to work properly.

Cleaning the Ice Storage Bin

Clean the ice storage bin at regular intervals, particularly before you take a vacation or move.

To clean the ice storage bin:

1. Turn **Off** the ice maker.
2. Remove the ice storage bin by lifting up and out.
3. Empty and carefully clean the ice storage bin with mild detergent. Rinse with clear water. Do not use harsh or abrasive cleaners.
4. Allow the ice storage bin to dry completely before replacing it in the freezer.
5. Remove ice chips and clean the ice storage bin, shelf and the freezer door chute.
6. Replace the ice storage bin. Turn **On** the ice maker to resume ice production.

Remove and empty the ice storage bin if:

- An extended power failure (1 hour or longer) causes ice cubes in the ice storage bin to melt and freeze together.
- You do not use ice frequently. Ice cubes will freeze together in the bin.

Remove the ice storage bin and shake to loosen the cubes or clean as explained above.

CAUTION

NEVER use an ice pick or similar sharp instrument to break up the ice. This could damage the ice storage bin.

Glass shelves

Shelves are easily adjusted to suit individual needs. Before adjusting the shelves, remove all food. Shelves are supported by side rails. See **Glass Shelves** in **CARE AND CLEANING** for proper shelf removal.

Door storage

Door bins and shelves are provided for convenient storage of jars, bottles, and cans. You can quickly select frequently used items.

Some models have door bins that can accommodate gallon-sized plastic drink containers and economy-sized jars and containers. Some bins are adjustable for maximum storage capacity.

The dairy compartment, which is warmer than the general food storage section, is intended for short term storage of cheese, spreads, or butter.

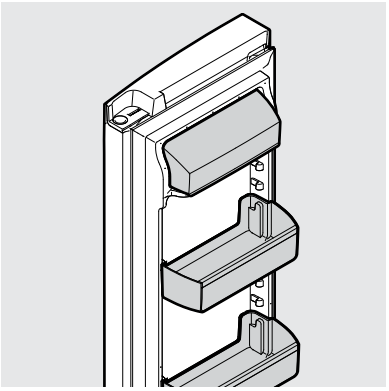

Dairy Bin and Door Bin

Deli Drawer

Some models are equipped with a Deli Drawer for storing luncheon meats, spreads, cheeses and other deli items. This drawer does not have a separate temperature control.



Deli Drawer

Crispers

Crispers allow you the flexibility to store any manner of items including fruits, vegetables, nuts, etc. Crispers do not feature humidity controls.

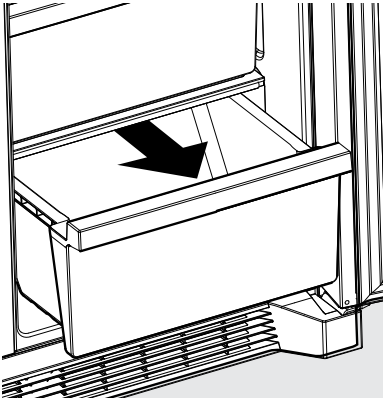

Crisper

Understanding the Sounds you may Hear

Your new, high-efficiency unit may introduce unfamiliar sounds. These sounds normally indicate your appliance is operating correctly. Some surfaces on floors, walls, and kitchen cabinets may make these sounds more noticeable.

Following is a list of major components in your unit and the *sounds* they can cause:

- **A** **Evaporator** Refrigerant through the evaporator may create a *boiling* or *gurgling* sound.
- **B** **Evaporator fan** You may hear *air being forced through the refrigerator* by the evaporator fan.
- **C** **Defrost heater** During defrost cycles, water dripping onto the defrost heater may cause a *hissing* or *sizzling* sound. After defrosting, a *popping* sound may occur.
- **D** **Condenser fan** You may hear *air being forced* through the condenser.
- **E** **Water valve** Makes a *buzzing* sound each time it opens to fill the ice maker.
- **F** **Drain pan** (not removable) You may hear *water dripping* into the drain pan during the defrost cycle.
- **G** **Condenser** May create minimal sounds from *forced air*.
- **H** **Motorized damper** May produce *intermittent humming* during operation.
- **I** **Ice Maker** When ice has been produced, you will hear *ice cubes falling* into the ice bin.

✪ Compressor

Modern, high-efficiency compressors run much faster than previous models. The compressor may have a noticeable hum or pulsating sound during operation.

NOTE

Energy efficient foam in your refrigerator is not a sound insulator.

NOTE

During automatic defrost cycle, a red glow in the back wall vents of your freezer compartment is normal.

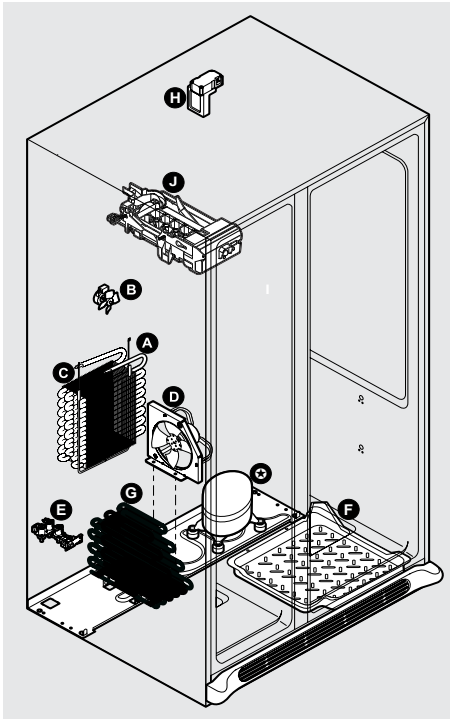

PurePour™ Water Filter

Keep safe, great-tasting water flowing with a **PurePour** water filter. Using a **PurePour** water filter:

- **Makes Safe Water Second Nature** **PurePour** water filters are certified to reduce contaminants* and keep great-tasting water flowing for you and your family.
- **Produces Purity You Can Trust** Know for certain your **PurePour** water filter is a protector. Counterfeits and knockoffs put your refrigerator and health at risk. Frigidaire Genuine Filters are the smarter, safer choice.
- **Every Drop Gives Back** Partnered on sustainability efforts, the use of a **PurePour** water filter helps cut back on the cost and use of plastic used to produce and package bottled water

Ordering your replacement water filter

If you have not used your refrigerator for a period of time (during moving for example), change the filter before reinstalling the refrigerator. To order your replacement filters, please visit our online store at Frigidaire.com, by calling toll-free at 1-800-372-4432, or by visiting the dealer where you purchased your refrigerator. We recommend you order extra filters when you first install your refrigerator, and you replace your filters at least once every 6 months.

Here are the product numbers to request when ordering:

PurePour™ Water & Ice Refrigerator Filter PWF-1™ FPPWFUO1

NOTE

When you order your replacement filter, please reorder the same filter type currently in your refrigerator.

*Find the Performance Data Sheet located in the **Guides and Manuals** section for your specific water filter on Frigidaire.com.

More about your advanced water filter

LEAD FREE

Certified by IAPMO R&T against NSF/ANSI Standards 42, 53, 401, CSA B483.1 and NSF/ANSI/CAN 372 in PurePour PWF-1 systems for reduction of the claims on the Performance Data Sheet*.

Do not use with water that is microbiologically unsafe or of unknown quality without adequate disinfection before or after the system. Use systems certified for cyst reduction on disinfected waters that may contain filterable cysts.

Test & certification results:

- Rated Capacity - 125 gal/453 L for **PurePour** and ice and water filter
- Rated service flow - .50 gal/min.
- Operating Temp.: Min. 33°F, Max. 100°F
- Maximum Rated Pressure - 100 lbs/in.²
- Recommended Minimum Operating Pressure: 30 lbs/in²

Replacing your water filter

The water filter is located at the top right side of the refrigerator compartment. In general, you should change the water filter every 6 months to ensure the highest possible water quality. **Water Filter Status** on the user interface prompts you to replace the filter after a standard amount of water (125 gal/453 L for **PurePour**) has flowed through the system.

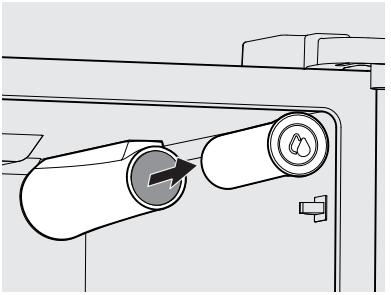

It is not necessary to turn the water supply off to change the filter. Be ready to wipe up any small amounts of water released during the filter replacement.

1. Turn **Off** the ice maker.
2. Remove the filter by pushing on the end/face of the filter.
3. Slide the old water filter cartridge straight out of the housing and discard it.
4. Unpackage the new filter cartridge. Using the alignment guide, slide it gently into the filter housing until it stops against the snap-in connector at the back of the housing.
5. Push firmly until the cartridge snaps into place (you should hear a click as the cartridge engages the snap-in connector).
6. Press a drinking glass against the water dispenser while checking for any leaks at the filter housing. Any spurts and sputters that occur as the system purges air out of the dispenser system are normal.
7. After filling one glass of water, continue flushing the system for about **4 minutes**.
8. Turn **On** the ice maker.
9. Press and hold the **Water Filter** reset button on the ice & water dispenser control panel for 3 seconds. When the display changes from red to green, the status has been reset.

PureAir Ultra II™ Air Filter

Your appliance control display is equipped with a **REPLACE AIR FILTER** indicator to remind you to change your filter every 6 months to ensure optimal filtering of appliance odors. Your **PureAir Ultra II** Air Filter is included in your Literature Pack in the crisper drawer. To order replacement filters, please visit our online store at Frigidaire.com, by calling toll-free at 1 (800) 372-4432, or by visiting the dealer where you purchased your unit.

Here are the product numbers to request when ordering:

PureAir Ultra II™ Air Filter PAULTRA2

Replacing your air filter

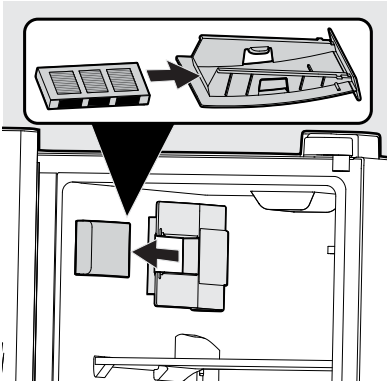

You should change your air filter every 6 months (the filter status light on the control panel prompts you to replace the filter after 6 months) to optimize the reduction of refrigerator odors. Different foods will emit various levels of odor. To install your new **PureAir Ultra II** air filter:

1. Pull the air filter housing straight out.
2. Remove the old filter and discard it (if applicable).
3. Unpack the new filter and place it inside the housing.
4. Slide the housing back into position.
5. Activate or reset the **Air Filter** status light on the control panel.

PureAir Produce Keeper™

Keep fruits and vegetables fresher longer with **PureAir Produce Keeper**. Our produce keeper absorbs ethylene gas, the natural gas that causes produce to ripen quicker. Reduce food waste, save money and enjoy fresh-tasting produce with a longer storage life.

Ordering your replacement filter

Order replacement filters online at Frigidaire.com, by calling 1-800-374- 4432 or through the dealer from which the refrigerator was purchased. We recommend replacing filters at least once every 6 months.

Here is the product number to request when ordering:

PureAir Produce Keeper FRPAPKRF

Installing the PureAir Produce Keeper:

1. Remove the plastic wrapper. Insert the unopened packet into the holder in the rear of the Crisper.
2. For optimal results, replace the refill every 6 months along with your air filter.

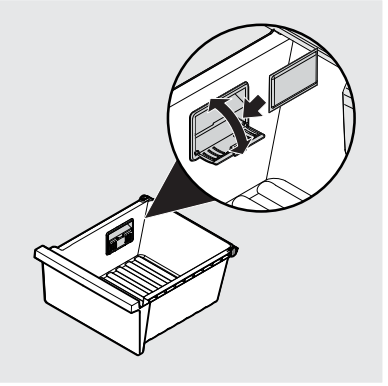

CAUTION

Remove the Produce Keeper Prior to washing the Crisper.

CAUTION

DO NOT OPEN. Contents may irritate eyes or skin. Keep out of reach of children.
FIRST AID: Contains potassium permanganate. In case of contact with eyes or skin, rinse immediately with water.
DO NOT EAT: If swallowed, seek medical treatment immediately.

Damper/Air Filter Housing

In humid regions certain products stored too close to the damper/air filter housing may freeze. If this scenario occurs, adjust the fresh food temperature settings and reconfigure the top shelf storage to allow for proper air diffusion.

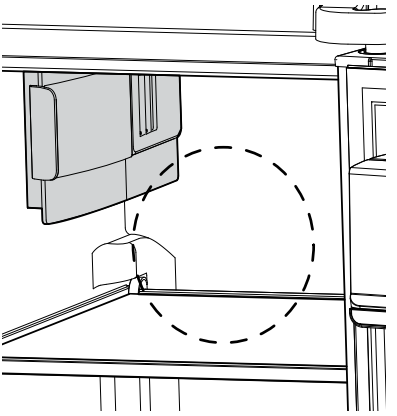

Protecting your investment

Keeping your appliance clean maintains appearance and prevents odor build-up. Wipe up any spills immediately and clean the freezer and refrigerator compartments at least twice a year. When cleaning, take the following precautions:

- Never use CHLORIDE or cleaners with bleach to clean stainless steel.
- Do not wash any removable parts in a dishwasher.
- Always unplug the electrical power cord from the wall outlet before cleaning.
- Remove adhesive labels by hand. Do not use razor blades or other sharp instruments which can scratch the appliance surface.
- Do not remove the serial plate.

Do not use abrasive cleaners such as window sprays, scouring cleansers, brushes, flammable fluids, cleaning waxes, concentrated detergents, bleaches or cleansers containing petroleum products on plastic parts, interior doors, gaskets or cabinet liners. Do not use paper towels, metallic scouring pads, or other abrasive cleaning materials or strong alkaline solutions.

NOTE

If you set your temperature controls to turn off cooling, power to lights and other electrical components will continue until you unplug the power cord from the wall outlet.

CAUTION

- Pull the unit straight out to move it. Shifting it from side to side may damage flooring. Be careful not to move the appliance beyond the plumbing connections.
- Damp objects stick to cold metal surfaces. Do not touch refrigerated surfaces with wet or damp hands.
- Sudden temperature changes can cause glass breakage.

IMPORTANT

If you store or move your unit in freezing temperatures, be sure to completely drain the water supply system. Failure to do so could result in water leaks when you put the unit back into service. Contact a service representative to perform this operation.

Glass Shelves

CAUTION

To avoid personal injury or property damage, handle tempered glass shelves carefully. Shelves may break suddenly if nicked, scratched, or exposed to sudden temperature change. Allow the glass shelves to stabilize to room temperature before cleaning. Do not wash in the dishwasher.

Refrigerator: Shelves are easily adjusted to suit individual needs. Before adjusting the shelves, remove all food. Shelves are supported by side rails.

To adjust, lift up on the back of the shelf and pull forward.

Replace the shelf by sliding it on top of the formed rails on the side walls of the cabinet until the rear plastic hooks of the shelf lock into the rear of the cabinet liner.

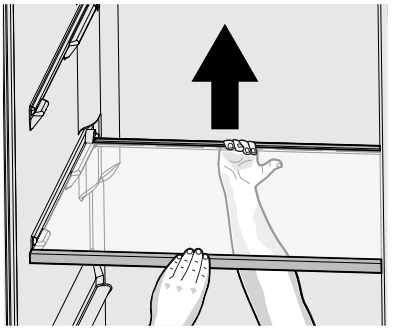

Refrigerator Glass Shelf

CAUTION

To avoid personal injury or property damage, handle the freezer glass shelves carefully. These shelves are fixed and are not to be used as sliding shelves.

Freezer: You can remove the glass freezer shelf for cleaning. Remove all food from the glass shelf. Rotate the front trim down to remove front trim (Figure 1).

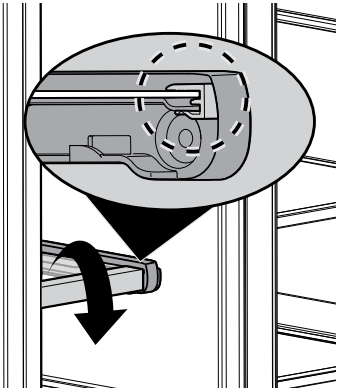

Figure 1

Remove both the rear trim and glass by pulling up on the rear tab and sliding the shelf forward (Figure 2)

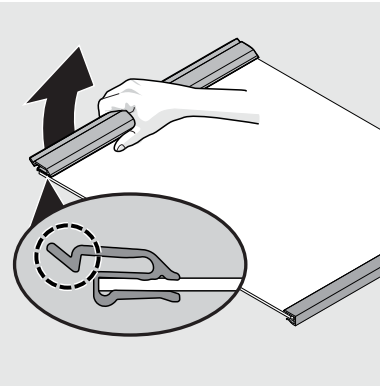

Figure 2

CAUTION

Allow the glass shelves to stabilize to room temperature before cleaning. Do not wash in the dishwasher.

To reassemble the freezer shelf, slide the glass and rear trim along the shelf rails while pressing the shelf downward until it is fully locked into place in the rear (Figure 3).

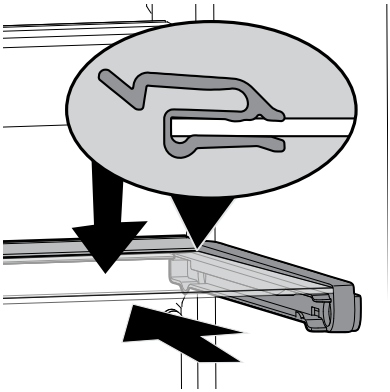

Figure 3

Finally, rotate the front trim upward on the front edge of the glass shelf (Figure 4).

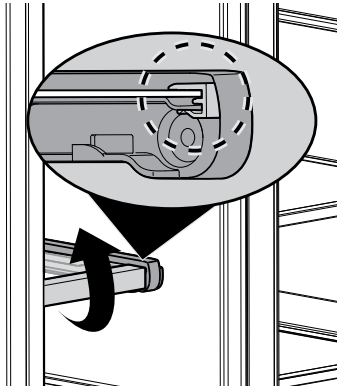

Figure 4

Care & Cleaning Tips		
Part	**What To Use**	**Tips and Precautions**
Interior & Door Liners	• Soap and water • Baking soda and water	Use 2 Tbsp of baking soda in 1 qt of warm water. **Be sure to wring excess water out of sponge or cloth before cleaning around controls, light bulb or any electrical part.**
Door Gaskets	• Soap and water	Wipe gaskets with a clean soft cloth.
Drawers & Bins	• Soap and water	Use a soft cloth to clean drawer runners and tracks.
Glass Shelves	• Soap and water • Glass cleaner • Mild liquid sprays	See **Glass Shelves** in **CARE AND CLEANING** before cleaning. Allow glass to warm to room temperature before immersing in warm water.
Toe Grille	• Soap and water • Mild liquid sprays • Vacuum attachment	Vacuum dust from front of toe grille. Remove toe grille (see Installation Instructions). Vacuum backside, wipe with sudsy cloth or sponge. Rinse and dry.
Exterior & Handles	• Soap and water • Non Abrasive Glass Cleaner	Do not use commercial household cleaners containing ammonia, bleach or alcohol to clean handles. Use a soft cloth to clean smooth handles. **DO NOT use a dry cloth to clean smooth doors.**
Exterior & Handles (Stainless Steel Models Only)	• Soap and water • Stainless Steel Cleaners	**Never use CHLORIDE or cleaners with bleach to clean stainless steel.** Clean stainless steel front and handles with non-abrasive soapy water and a dishcloth. Rinse with clean water and a soft cloth. Use a non-abrasive stainless steel cleaner. These cleaners can be purchased at most home improvement or major department stores. Always follow manufacturer's instructions. Do not use household cleaners containing ammonia or bleach. **NOTE: Always clean, wipe and dry with the grain to prevent scratching.** Wash the rest of the cabinet with warm water and mild liquid detergent. Rinse well, and wipe dry with a clean soft cloth.

Let us help you troubleshoot your concern! This section will help you with common issues. If you need us, visit our website, chat with an agent, or call us. We may be able to help you avoid a service visit. If you do need service, we can get that started for you!

1-800-374-4432 (United States)
Frigidaire.com

1-800-265-8352 (Canada)
Frigidaire.ca

CONCERN	CAUSE	SOLUTION
AUTOMATIC ICE MAKER		
Ice maker is not making any ice.	• Ice maker is turned off.	• Turn on ice maker. Press and hold the **On**/**Off** button for 3 seconds until the indicator light is on.
Ice maker is not making enough ice.	• Freezer did not completely cool down. • Check to see if water dispenser is dispensing slower than normal. • Freezer control is set too warm.	• After you properly install the refrigerator, it could take up to 48 hours for the ice maker to produce ice at designed rate. • If it is, replace the ice and water filter cartridge. • Set freezer control to colder setting to improve performance of the ice maker. Allow 24 hours for temperature to stabilize.
Ice cubes are freezing together.	• Ice cubes are not being used frequently enough. • Ice cubes are hollow (partially frozen cubes with water inside). • Freezer control is set too warm.	• Remove ice container and discard ice from container. Ice maker will produce fresh supply. • The ice and water filter cartridge may be clogged. Replace filter cartridge. • Set freezer control to colder setting. Allow 24 hours for temperature to stabilize.
WATER DISPENSER		
Dispenser will not dispense water.	• Water filter not seated properly. • Water filter is clogged. • Household water line valve is not open.	• Remove and reinstall the water filter. Be sure to push the filter firmly so that you hear it lock solidly into position. • Replace filter cartridge. Be sure to remove protective caps and push the filter firmly so that you hear it lock solidly into position. • Open the household water line valve.
Water has an odd taste and/or odor.	• Water has not been dispensed for an extended period of time. • Unit not properly connected to cold water line.	• Draw and discard 10-12 glasses of water to freshen the supply. • Connect unit to cold water line that supplies water to the kitchen faucet.
Water pressure is extremely low.	• Cut-off and cut-on pressures are too low (well systems only). • Reverse osmosis system is in regenerative phase.	• Have someone turn up the cut-off and cut-on pressure on the water pump system (well systems only). • It is normal for a reverse osmosis system to be below 20 psi during the regenerative phase. • See the **WATER SUPPLY CONNECTION** section.

CONCERN	CAUSE	SOLUTION
WATER DISPENSER (Continued)		
Water not cold enough.	• This water dispense system will not dispense cold water. The unit was designed without a cold water tank feature,	• Add ice to cup or container before dispensing water
OPENING/CLOSING OF DOORS/DRAWERS		
Door(s) will not close.	• Door was closed too hard, causing other door to open slightly. • Refrigerator is not level. It rocks on the floor when moved slightly. • Refrigerator is touching a wall or cabinet.	• Close both doors gently. • Ensure floor is level and solid, and can adequately support the refrigerator. Contact a carpenter to correct a sagging or sloping floor. • Ensure floor is level and solid, and can adequately support the refrigerator. Contact a carpenter to correct a sagging or sloping floor.
Drawers are difficult to move.	• Food is touching shelf on top of drawer. • Track that drawers slide on is dirty.	• Remove top layer of items in drawer. • Ensure drawer is properly installed on track. • Clean drawer, rollers, and track. See **CARE AND CLEANING**.
RUNNING OF REFRIGERATOR		
Compressor does not run.	• Freezer control is set to **OF** or **0**. • Refrigerator is in defrost cycle. • Plug at electrical outlet is disconnected. • House fuse blown or tripped circuit breaker. • Power outage.	• Set freezer control. • This is normal for a fully automatic defrost refrigerator. The defrost cycle occurs periodically, lasting about 30 minutes. • Ensure plug is tightly pushed into outlet. • Check/replace fuse with a 15 amp time-delay fuse. Reset circuit breaker. • Check house lights. Call local electric company.
Refrigerator runs too much or too long.	• Room or outside weather is hot. • Doors are opened too frequently or too long. • Refrigerator/freezer door may be slightly open. • Freezer control is set too cold. • Refrigerator/freezer gasket is dirty, worn, cracked, or poorly fitted. • Condenser is dirty.	• It's normal for the refrigerator to work longer under these conditions. • Warm air entering the refrigerator causes it to run more. Open doors less often. • Ensure refrigerator is level. Keep food and contains from blocking door. See **PROBLEM** column **OPENING/CLOSING OF DOORS/DRAWERS**. • Set Refrigerator control to warmer setting until refrigerator temperature is satisfactory. Allow 24 hours for temperature to stabilize. • Clean or change gasket. Leaks in door seal will cause refrigerator to run longer in order to maintain desired temperatures. • Clean condenser. See **CARE AND CLEANING**.

CONCERN	CAUSE	SOLUTION
RUNNING OF REFRIGERATOR (Continued)		
Appliance seems to run continuously.	• Today's refrigerators are designed with a variable speed compressor to be more energy efficient than previous models. This means your compressor reacts quickly to temperature fluctuations and circulates cold air based off your use and room temperature.	• This is normal for a variable speed compressor refrigerator; however, if you have concerns, call 1-800-374-4432 (United States) Frigidaire.com or 1-800-265-8352 (Canada) Frigidaire.ca.
WATER/MOISTURE/FROST INSIDE REFRIGERATOR		
Moisture collects on inside of refrigerator walls.	• Weather is hot and humid. • Door is slightly open.	• The rate of frost buildup and internal sweating increases. • See **PROBLEM** column **OPENING/CLOSING OF DOORS/DRAWERS**.
Water collects on bottom side of drawer cover.	• Vegetables contain and give off moisture.	• It is not unusual to have moisture on the bottom side of the cover. • Move humidity control (some models) to lower setting.
Water collects in bottom of drawer.	• Washed vegetables and fruit drain while in the drawer.	• Dry items before putting them in the drawer. Water collecting in bottom of drawer is normal.
Stored products on top shelf freeze	• Fresh food temperature setting too cold. • Certain products stored too close to damper / air filter housing.	• Adjust fresh food temperature settings. • Reconfigure top shelf storage to allow proper diffusion of air. See **Damper/Air Filter Housing** in the **FILTER REPLACEMENT** section.
WATER/MOISTURE/FROST OUTSIDE REFRIGERATOR		
Moisture collects on outside of refrigerator or between doors.	• Weather is humid. • Door is slightly open, causing cold air from inside refrigerator to meet warm air from outside.	• This is normal in humid weather. When humidity is lower, the moisture should disappear. • See **PROBLEM** column **OPENING/CLOSING OF DOORS/DRAWERS**.

30 LIMITED WARRANTY

Your appliance is covered by a one year limited warranty. For one year from your date of delivery, Electrolux will pay all costs for repairing or replacing any parts of this appliance that prove to be defective in materials or workmanship when such appliance is installed, used and maintained in accordance with the provided instructions.

Exclusions

This warranty does not cover the following:

1. Products with original serial numbers that have been removed, altered or cannot be readily determined.
2. Product that has been transferred from its original owner to another party or removed outside the USA or Canada.
3. Rust on the interior or exterior of the unit.
4. Products purchased “as-is” are not covered by this warranty.
5. Food loss due to any refrigerator or freezer failures.
6. Products used in a commercial setting.
7. Service calls which do not involve malfunction or defects in materials or workmanship, or for appliances not in ordinary household use or used other than in accordance with the provided instructions.
8. Service calls to correct the installation of your appliance or to instruct you how to use your appliance.
9. Expenses for making the appliance accessible for servicing, such as removal of trim, cupboards, shelves, etc., which are not a part of the appliance when it is shipped from the factory.
10. Service calls to repair or replace appliance light bulbs, air filters, water filters, other consumables, or knobs, handles, or other cosmetic parts.
11. Surcharges including, but not limited to, any after hour, weekend, or holiday service calls, tolls, ferry trip charges, or mileage expense for service calls to remote areas, including the state of Alaska.
12. Damages to the finish of appliance or home incurred during installation, including but not limited to floors, cabinets, walls, etc.
13. Damages caused by: services performed by unauthorized service companies; use of parts other than genuine Electrolux parts or parts obtained from persons other than authorized service companies; or external causes such as abuse, misuse, inadequate power supply, accidents, fires, or acts of God.

DISCLAIMER OF IMPLIED WARRANTIES; LIMITATION OF REMEDIES

CUSTOMER’S SOLE AND EXCLUSIVE REMEDY UNDER THIS LIMITED WARRANTY SHALL BE PRODUCT REPAIR OR REPLACEMENT AS PROVIDED HEREIN. CLAIMS BASED ON IMPLIED WARRANTIES, INCLUDING WARRANTIES OF MERCHANTABILITY OR FITNESS FOR A PARTICULAR PURPOSE, ARE LIMITED TO ONE YEAR OR THE SHORTEST PERIOD ALLOWED BY LAW, BUT NOT LESS THAN ONE YEAR. ELECTROLUX SHALL NOT BE LIABLE FOR CONSEQUENTIAL OR INCIDENTAL DAMAGES SUCH AS PROPERTY DAMAGE AND INCIDENTAL EXPENSES RESULTING FROM ANY BREACH OF THIS WRITTEN LIMITED WARRANTY OR ANY IMPLIED WARRANTY. SOME STATES AND PROVINCES DO NOT ALLOW THE EXCLUSION OR LIMITATION OF INCIDENTAL OR CONSEQUENTIAL DAMAGES, OR LIMITATIONS ON THE DURATION OF IMPLIED WARRANTIES, SO THESE LIMITATIONS OR EXCLUSIONS MAY NOT APPLY TO YOU. THIS WRITTEN WARRANTY GIVES YOU SPECIFIC LEGAL RIGHTS. YOU MAY ALSO HAVE OTHER RIGHTS THAT VARY FROM STATE TO STATE.

If You Need Service

Keep your receipt, delivery slip, or some other appropriate payment record to establish the warranty period should service be required. If service is performed, it is in your best interest to obtain and keep all receipts. Service under this warranty must be obtained by contacting Electrolux at the addresses or phone numbers below.

This warranty only applies in the USA and Canada. In the USA, your appliance is warranted by Electrolux Major Appliances North America, a division of Electrolux Home Products, Inc. In Canada, your appliance is warranted by Electrolux Canada Corp. Electrolux authorizes no person to change or add to any obligations under this warranty. Obligations for service and parts under this warranty must be performed by Electrolux or an authorized service company. Product features or specifications as described or illustrated are subject to change without notice.

USA
1-800-374-4432
Frigidaire
10200 David Taylor Drive
Charlotte, NC 28262

Electrolux

Canada
1.800.265.8352
Electrolux Canada Corp.
5855 Terry Fox Way
Mississauga, Ontario, Canada
L5V 3E4

FRIGIDAIRE

welcome **home**

Our home is your home. Visit us if you need help with any of these things:

 owner support

 accessories

 service

 registration

(See your registration card for more information.)

Frigidaire.com
1-800-374-4432

Frigidaire.ca
1-800-265-8352