SANYO

# INSTRUCTION MANUAL

~~MPR-311(H)~~

**MPR-311D(H)**

~~MPR-311DR(H)~~

## Pharmaceutical Refrigerator

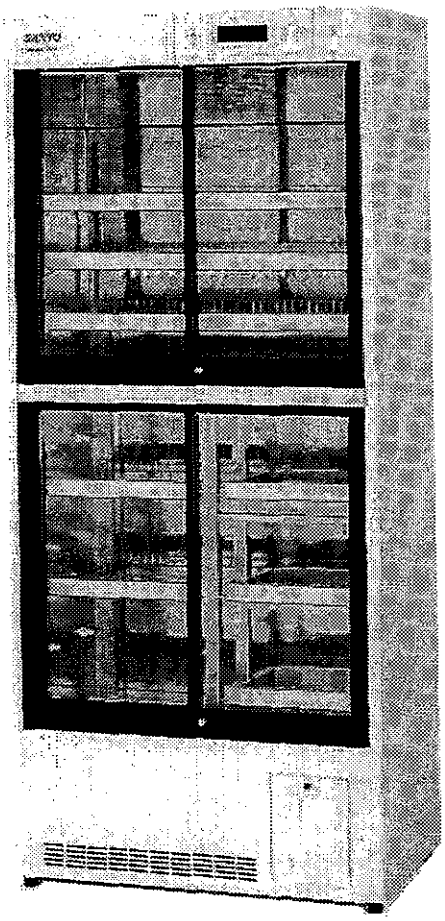

MPR-311DR(H)

Note:

1. No part of this manual may be reproduced in any form with the expressed written permission of SANYO.
2. The contents of this manual are subject to change without notice.
3. Please contact SANYO if any point in this manual is unclear or if there are any inaccuracies.

SANYO Electric Co., Ltd. All rights reserved. Printed in Japan.

CONTENTS


| | |
|---|---|
| PRECAUTIONS FOR SAFE OPERATION | P. 1 |
| CAUTIOINS FOR USAGE | P. 5 |
| NAME AND FUNCTION OF PARTS | P. 6 |
| BEFORE COMMENCING OPERATION | P. 8 |
| AUTOMATIC TEMPERATURE RECORDER | P. 10 |
| START-UP OF UNIT | P. 11 |
| OPERATING INSTRUCTIONS | P. 12 |
| MAINTENANCE | P. 14 |
| TROUBLE SHOOTING | P. 15 |
| ENVIRONMENTAL CONDITIONS | P. 15 |
| DISPOSAL OF UNIT | P. 15 |
| SPECIFICATIONS | P. 16 |
| PERFORMANCE | P. 16 |
| SAFETY CHECK SHEET | P. 17 |


# PRECAUTIONS FOR SAFE OPERATION

**It is imperative that the user complies with this manual as it contains important safety advice.**

Items and procedures are described so that you can use this unit correctly and safely. If the precautions advised are followed, this will prevent possible damage to the user and any other person.

Precautions are illustrated in the following way:

**⚠WARNING**

Failure to observe WARNING signs could result in a hazard to personnel possibly resulting in serious injury or death.

**⚠CAUTION**

Failure to observe CAUTION signs could result in injury to personnel and damage to the unit and associated property.

Symbol shows;

⚠ △ this symbol means caution.

⃠ ⃠ this symbol means an action is prohibited.

● this symbol means an instruction must be followed.

Be sure to keep this manual in a place accessible to users of this unit.

# PRECAUTIONS FOR SAFE OPERATION

## ⚠WARNING



Do not use the unit outdoors. Current leakage or electric shock may result if the unit is exposed to rainwater.



Only qualified engineers or service personnel should install the unit. The installation by unqualified personnel may cause gas or liquid leakage, electric shock or fire.



Be sure to install the unit on a sturdy floor. If the floor is not strong enough or the installation site is not adequate, this may result in injury from the unit falling or tipping over.



Never install the unit in a humid place or a place where it is likely to be splashed by water. Deterioration of the insulation may result which could cause current leakage or electric shock.



Never install the unit in a flammable or volatile location. This may cause explosion or fire.



Never install the unit where acid or corrosive gases are present as current leakage or electric shock may result due to corrosion.



Make sure a dedicated power source is used as indicated on the rating label attached to the unit.



Make sure to remove dust from the power supply plug before inserting in a power source. A dusty plug or improper insertion may pose a hazard.



Use a power supply outlet with ground (earth) to prevent electric shock. If the power supply outlet is not grounded, it will be necessary to install a ground by qualified engineers.



Never ground the unit through a gas pipe, water main, telephone line or lightening rod. Such grounding may cause electric shock in the case of an incomplete circuit.



Do not insert metal objects such as a pin or a wire into any vent, gap or any outlet for inner air circulation. This may cause electric shock or injury by accidental contact with moving parts.



Never store volatile or flammable substances in this unit. This may cause explosion or fire.



Never store corrosive substances in this unit. This may lead to damage to the inner components or electric parts.



Make sure to use this unit in safe area when treating the poison, harmful or radiate articles. Improper use may cause bad effect on your health or environment.



Make sure to prepare a safety check sheet when you request any repair or maintenance for the safety of service personnel.



Always disconnect the power supply to the unit prior to any repair or maintenance of the unit in order to prevent electric shock or injury.



Ensure you do not inhale or consume medication or aerosols from around the unit at the time of maintenance. These may be harmful to your health.



Never splash water directly onto the unit as this may cause electric shock or short circuit.

# PRECAUTIONS FOR SAFE OPERATION

## ⚠WARNING



Never disassemble, repair, or modify the unit yourself. Any such work carried out by an unauthorized person may result in fire or injury due to a malfunction.



Make the power supply to the unit is disconnected when the fluorescent light is replaced as this will prevent electric shock.



Disconnect the power supply plug if there is something wrong with the unit. Continued abnormal operation may cause electric shock or fire.



If the unit is to be stored unused in an unsupervised area for an extended period ensure that children do not have access and doors cannot be closed completely.



The disposal of the unit should be accomplished by appropriate personnel. Always remove doors to prevent accidents such as suffocation.

## ⚠CAUTION



Select a level and sturdy floor for installation. This precaution will prevent the unit from tipping. Improper installation may result in water spillage or injury from the unit tipping over.



Do not install the unit where objects may fall on it. The electric parts are located in the upper part of this unit.



Connect the unit to a power source as indicated on the rating label attached to the unit. Use of any other voltage or frequency other than that on the rating label may cause fire or electric shock.



Fix the shelves securely. Incomplete installation may cause injury or damage.



When removing the plug from the power supply outlet, grip the power supply plug, not the cord. Pulling the cord may result in electric shock or fire by short circuit.



Never damage or break the power supply plug or cord. Do not use the supply plug if its cord is loose. This may cause fire or electric shock.



Do not touch any electrical parts such as the power supply plug or any switches with a wet hand. This may cause electric shock.



Do not put a container with water or heavy articles on the unit. It may cause injury by falling down of the articles. Current leakage or electric shock may be resulted from the deterioration of insulation by spilled water.



Do not climb onto the unit or do not put articles on the unit. This may cause injury by turning or damage to the unit.

# PRECAUTIONS FOR SAFE OPERATION

## ⚠CAUTION

- Always hold the handle when closing the door. This will prevent the likelihood of a trapped finger.
- Never lean or press on the glass. Intentional force may cause injury if the glass breaks.
- Do not lean on the door. This may cause injury if the unit tips over.
- Check the filter mentioned in this manual and clean it as necessary. The dusty filter may cause temperature rise or failure.
- Never touch the condenser directly when the filter is removed for cleaning Surfaces may be hot.
- Always disconnect the power supply plug before moving the unit during transit. Take care not to damage the power cord. The damaged cord may cause electric shock or fire.
- Dispose of water in the evaporation try completely. Spilled water or splashed water may cause current leakage or fire.
- Be careful not to tip over the unit during movement to prevent damage or injury.
- Always disconnect the power plug when the unit is not used for long periods.
- Do not put the packing plastic bag within reach of children as suffocation may result.

# CAUTIONS FOR USAGE

① If the unit is unplugged or the power to the unit is interrupted, do not restart the unit for at least 5 minutes. This protects the compressor.

② This inner cabinet is refrigerated by the forced circulation of cooled air inside the chamber. Ensure that the intake and exhaust vents are not blocked.

③ Adequate space should be provided between the items inside the unit to allow air circulation.

④ Never store corrosive materials such as acid or alkali unless the container is completely sealed up. Corrosion may lead to failure of the unit in time.

⑤ Once the chamber temperature has stabilized, put the items into the chamber in small batches to minimize the temperature increase.

⑥ Fix the shelves securely. Place items on the shelves and leave a space between the walls of the cabinet and the contents to allow air circulation. Do not place items on the floor of the chamber.

⑦ When the power plug-in the unit, the fan does not always operate immediately. After a few minutes, the fan operates properly.

⑧ For some time after the unit has been started, or when the ambient temperature is fairly high, the cabinet walls may heat up. This does not indicate a malfunction. It indicates that the dew preventative/power economy function is performing satisfactorily. Hot gases are piped from the motor compressor along the front edges of the cabinet to prevent dew condensation.

⑨ If condensation forms on the front glass or frame surface, wipe it off with a soft, dry cloth.

⑩ Do not clean the unit with scrubbing brushes, acid, thinner, solvents, powdered soap, cleanser or hot water. These agents can scratch the paint or cause it to peel. Plastic and rubber parts can be easily damaged by these materials, especially solvents. When a neutral detergent is used to clean the unit, rinse thoroughly with a cloth soaked in clean water.

⑪ If an instrument requiring a power source is to be placed inside the cabinet, the cable can be led through the access port on the left hand side of the cabinet. After installation, a rubber cap should be used to seal the access port. Failure to do this can affect the temperature uniformity inside the cabinet and lead to condensation on the outside of the access port.

## Caution for model with CE mark

This unit is equipped with the circuit breaker on the back. Make sure this breaker is switched ON before the unit is started to run.

When the operation of the unit is stopped by this breaker, contact a dealer or a service station after disconnected the power supply plug.

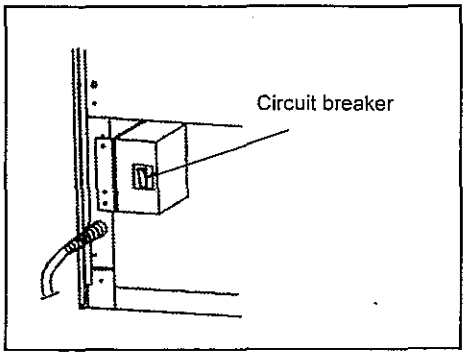




Never disassemble, repair, or modify the unit yourself. Any such work carried out by an unauthorized person may result in fire or injury due to a malfunction.



Disconnect the power supply plug if there is something wrong with the unit. Continued abnormal operation may cause electric shock or fire.



Connect the unit to a power source as indicated on the rating label attached to the unit. Use of any other voltage or frequency other than that on the rating label may cause fire or electric shock.

# NAME AND FUNCTION OF PARTS

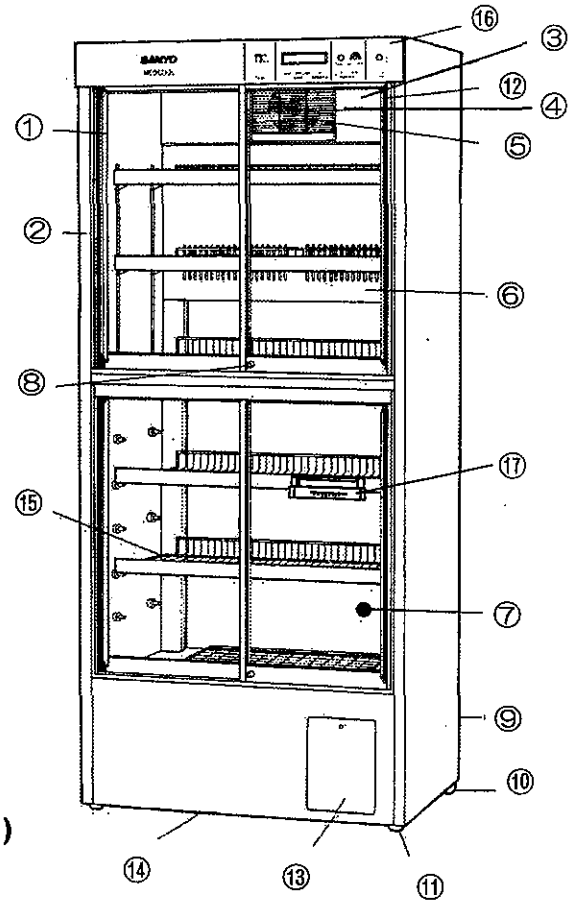


MPR-311D(H)

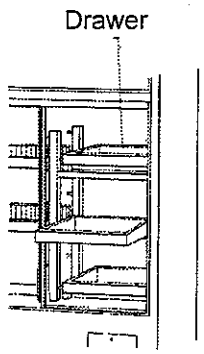


MPR-311DR(H)

① Door
Consists of double pair glass with heat ray reflection film.

② Frame (Product unit)

③ Fluorescent lamp
20W white light. For replacement, refer to page 13.

④ Air circulating fan
Circulate the cooled air in chamber.

⑤ Air intake vent

⑥ Air exhaust vent

⑦ Monitoring hole
This hole allows cables to be passed into the cabinet.

⑧ Lock

⑨ Circuit breaker install position

⑩ Caster
For moving of the unit. At the time of installation, use the height adjusting screw to level the unit.

⑪ Height adjusting screw
Adjust the height by screw bolt used to level and install the unit.

⑫ Door switch (MPR-311D(H) only)

⑬ Temperature recorder install position

⑭ Evaporating tray
Place in rear bottom of the frame. Pull out forward for removing.

⑮ Shelf

⑯ Control panel

⑰ Thermometer (MPR-311(H) only)

# NAME AND FUNCTION OF PARTS

## Control panel

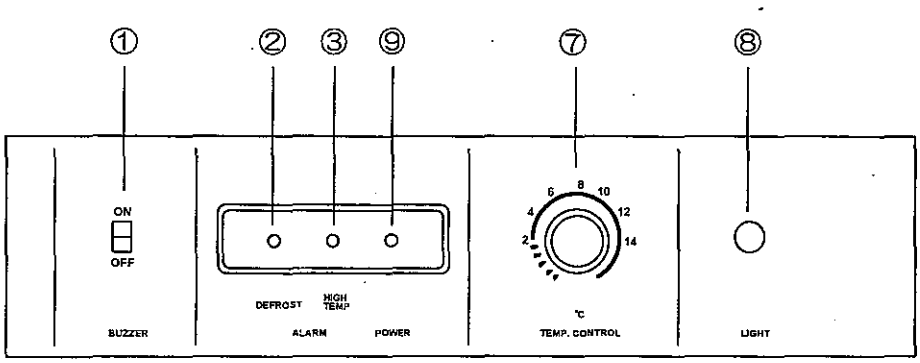


**MPR-311(H)**

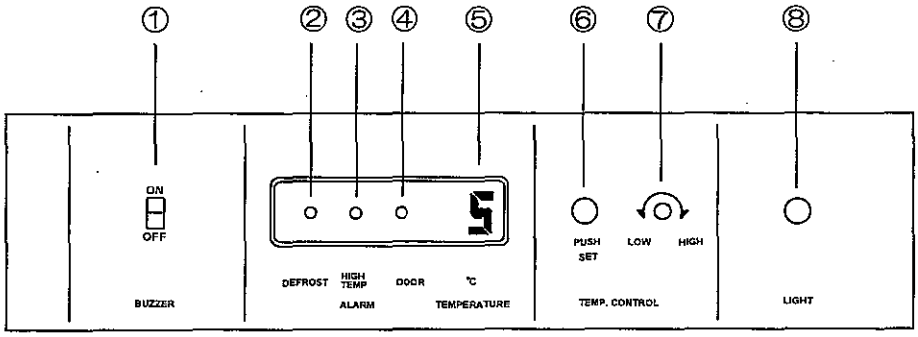


**MPR-311D(H), MPR-311DR(H)**

① Buzzer switch (BUZZER)
By sliding this switch to OFF position, the buzzer can be silenced when the alarm is activated.

② Defrost lamp (DEFROST)
This lamp is lit during defrosting.

③ High temperature alarm lamp (HIGH TEMP.)
This lamp is lit during high temperature alarm condition.

④ Door check lamp (DOOR)
This lamp is lit when the door is open. (MPR-311D(H), MPR-311DR(H))

⑤ Digital temperature display
This indicator shows the chamber temperature or set temperature. (MPR-311D(H), MPR-311DR(H))

⑥ Set button (PUSH SET)
The set temperature is displayed while this button is pressed. (MPR-311D(H), MPR-311DR(H))

⑦ Temperature control knob
This knob is for setting a desired temperature.

⑧ Fluorescent lamp switch (LIGHT)
To turn on the light, keep on pressing this switch until the both sides of a fluorescent lamp is lit. To turn off the light, press this switch again.

⑨ Power supply lamp
This lamp is lit when the power is supplied to the unit. (MPR-311(H) only)

# BEFORE COMMENCING OPERATION

## Installation site

To operate this unit property and to obtain maximum performance, install the unit in a location with the following conditions.

**① A location not subjected to direct sunlight**

Installation in a location subjected to direct sunlight may lead to inadequate cooling.

**② A location with adequate ventilation**

Leave at least 10cm around the unit for ventilation. Poor ventilation result in a reduction of the refrigeration capability.

**③ A location far from heat generating sources**

Avoid installing the unit near heat-emitting appliances such as gas ranges or stoves. Heat can cause inefficient refrigeration.

**④ A location with a sturdy and level floor**

**⚠WARNING**

Be sure to install the unit on a sturdy floor. If the floor is not strong enough or the installation site is not adequate, this may result in injury from the unit falling or tipping over.

**⚠CAUTION**

Select a level and sturdy floor for installation. This precaution prevents the unit from tipping. Improper installation may result in water spillage or injury from the unit tipping over.

Install the unit on a sturdy floor to avoid vibration and noise. Placing the unit on an unsteady floor will cause vibration and noise.

**⑤ A location not prone to high humidity**

**⚠WARNING**

Do not use the unit outdoors. Current leakage or electric shock may result if the unit is exposed to rainwater.

Never install the unit in a humid place or a place where it is likely to be splashed by water. Deterioration of the insulation may result which could cause current leakage or electric shock.

Do not install the unit under the piping for water main and /or vapor. Deterioration of the insulation may cause current leakage or electric shock.

**⑥ A location without a flammable or corrosive gas**

**⚠WARNING**

Never install the unit near a flammable or volatile location. This may cause explosion or fire.

Never install the unit where acid or corrosive gases are present as current leakage or electric shock may result due to corrosion.

# BEFORE COMMENCING OPERATION

## Installation

**① Remove the packaging materials and tapes**

Remove all transportation packaging materials and tapes. Open the doors and ventilate the unit. If the outside panels are dirty, clean them with a mild detergent and rinse with water.

**② Adjust the height adjusting screws**

Extend the height adjusting screws by rotating them counterclockwise to contact them to the floor.

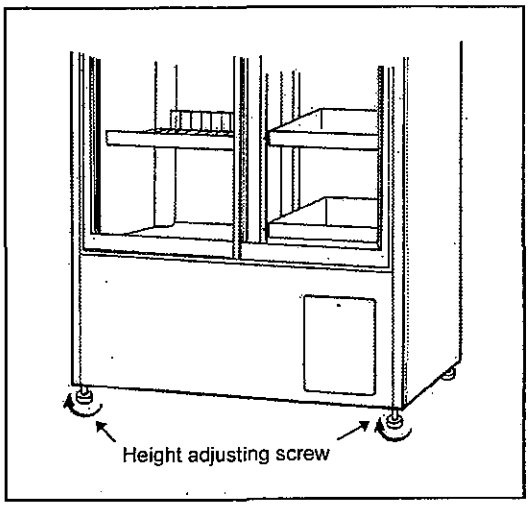


**③ Fix the unit**

Two hooks are attached to the rear of the cabinet. Fix the cabinet to the wall with these hooks and rope or chain.

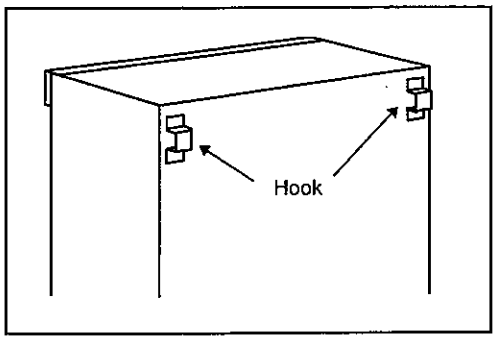


**④ Grounding**

**⚠WARNING**

Use an outlet with ground to prevent electric shock. In the case of no outlet with ground, it is necessary to provide ground by qualified engineers.

Never ground the unit through a gas pipe, water main, telephone line or lightening rod. Such wiring may cause electric shock in the case of incomplete ground.

# AUTOMATIC TEMPERATUER RECORDER

## Automatic temperature recorder (optional)

To record the chamber temperature, an optional automatic temperature recorder is available. Please consult with our sales department or agency for recorder installation.

The available recorder model is MTR-0620LH. Moreover, a mounting kit (MDF-53RO(H)) is also necessary for MPR-311(H). Refer to an instruction manual attached to a recorder for the recorder installation.

## Installation of temperature recorder

Following shows the procedure for installing a temperature recorder to the unit MPR-311D(H) and MPR-311DR(H).

① Take out a recorder from the package. Make sure to keep the instruction manual and warranty card in an accessible place.
② Remove the mounting panel by opening and lifting it up.

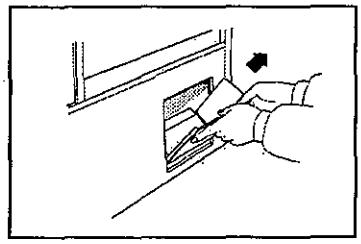

③ Wire the harness provided with the recorder properly as shown in the figure.

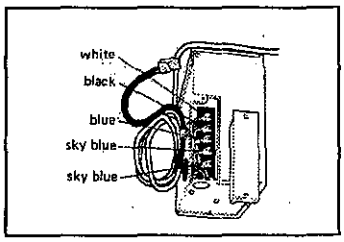


④ Remove the cover from the mounting panel.
⑤ Fix the recorder to the mounting panel with two screws.

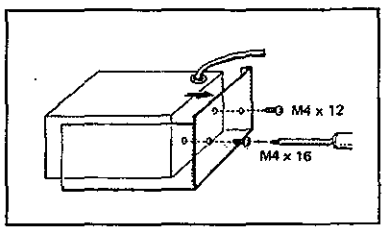


⑥ Install the mounting panel.

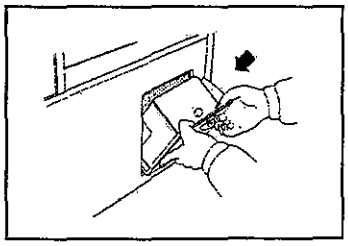

⑦ Route the recorder sensor into the chamber by passing through the monitoring hole on the back side.
⑧ After installation, power on the unit. Check that the temperature alarm is operated properly when the temperature indicator needle (yellow) is matched to the upper limit temperature alarm needle (red).

**Setting of temperature alarm needle**
Open the cover and set the upper limit temperature alarm needle (red) and lower limit temperature alarm needle (blue) manually to the required temperature on the scale. Both the upper and lower alarm needles should be set at least 3℃ apart from the set temperature of the thermostat.

Upper limit temperature = set temperature of the thermostat plus more than 3℃
Lower limit temperature = set temperature of the thermostat minus more than 3℃

# START-UP OF UNIT

The following procedure should be adhered to for initial start-up and continuous operation.

① Connect unit to dedicated power supply. Do not put any product in the unit at this time.
② When the power is initially applied, the audible alarm may sound. Set the BUZZER switch to OFF to silence the alarm.
③ Set the desired temperature.
④ Check that the chamber temperature has reached to the desired temperature.
⑤ When you are satisfied that the unit is working correctly, begin slowly placing product into the chamber to minimize the temperature rise.

## Handling of the containers

Arrange containers not to disturb air circulation in the unit. Disturbance of air circulation may cause freeze of containers or incline of temperature.

**① Air intake vent**
Avoid the disturbance of air circulation in the unit by containers. Disturbance of air circulation may causes freeze of containers or incline of temperature.

**② Air exhaust vent**
Do not disturb the exhaust air port by putting containers near the exhaust air port. Containers near the exhaust air port may freeze when the unit runs with low temperature (less than 5℃).

**Note:**
Never store the material of corrosive such as acid or alkaline of which container is not sealed up completely. It may cause poor cool by refrigerant leakage resulted from corrosion of the evaporator.

## Defrost cycles

There are two types of defrost cycles present in this blood bank refrigerator, and both cycles occur automatically.

**1. Cycle defrost**
To keep the temperature stable inside the chamber, the refrigeration compressor is cycled on and off. During the "off" periods any frost which has accumulated on the refrigeration coils is melted by energizing a small heater, this will not have any discernable effect on the chamber temperature.

**2. Forced defrost**
When ambient humidity is high, or a large amount of damp product is being stored inside the refrigerator, there is a possibility that cycle defrost may not be enough to remove all of the frost on the refrigeration coils. In this case, a forced defrost cycle will be initiated. While the unit is operating under a forced defrost cycle, the defrost lamp on the control panel will be lit. Once the forced defrost cycle is complete, normal operation will resume. The chamber temperature rises to about 10℃ during the defrosting.

# OPERATING INSTRUCTIONS

## Temperature set

**Set up of chamber temperature**

Table 1 and 2 show the basic operation method. Follow the key operation sequence indicated in the table. The example in the table is based on the assumption that the chamber temperature set at 10℃. The unit is set at the factory to obtain the proper temperature (5℃) automatically.

Table 1 For MPR-311(H)

| | Operation | Description |
|---|---|---|
| 1 | Connect the power supply plug to a dedicated power supply outlet. | The power supply lamp is lit. |
| 2 | Set the temperature control knob to 10℃. | The chamber temperature is gradually decreased. |

Note:

An accurate chamber temperature is necessary, put a standard thermometer at the center of the chamber. Refer to the temperature display of the thermometer for the setting of chamber temperature.

Table 2 For MPR-311D(H), MPR-311DR(H)

| | Operation | Description |
|---|---|---|
| 1 | Connect the power supply plug to a dedicated power supply outlet. | Current chamber temperature is displayed on the indicator. (The display is flashed when the chamber temperature is over 15℃ or lower than 0℃. |
| 2 | Set the temperature control knob to 10℃ by using a screw driver with pressing the set button. | The chamber temperature is gradually decreased. (The set temperature is displayed while the set button is pressed.) |

# OPERATING INSTRUCTIONS

## Alarm, Safety function and Self diagnostic function

This unit has the alarm and safety functions shown in Table 3 and Table 4, and also a self diagnostic function.

Table 3 Alarm and safety functions (MPR-311(H))

| Alarm or safety | Situation | Indication | Buzzer | Safety operation |
|---|---|---|---|---|
| High temp. alarm | The chamber temp. is more than about 20°C. | High temp. alarm lamp is lit. | Pulse tone | ----- |
| Low temp. alarm | The chamber temp. is less than about -2°C. | Defrost lamp is lit. | Pulse tone | ----- |

Note: The alarm buzzer can be canceled by turning the buzzer switch to OFF.

Table 4 Alarm and safety functions (MPR-311D(H), MPR-311DR(H))

| Alarm or safety | Situation | Indication | Buzzer | Safety operation |
|---|---|---|---|---|
| High temp. alarm | The chamber temp. is more than 15°C.<br>The chamber temp. is more than about 20°C. | Temperature display is flashed.<br>High temp. alarm lamp is lit. | Pulse tone<br>Pulse tone | ----- |
| Low temp. alarm | The chamber temp. is less than 0°C.<br>The chamber temp. is less than about -2°C. | All digits on the temp. display are flashed.<br>Defrost lamp is lit. | Pulse tone<br>Pulse tone | ----- |
| Door alarm | When the door is opened. | Door check lamp is lit. | Pulse tone after delay of 30 seconds | ----- |
| Thermal sensor abnormality | If the thermal sensor is disconnected. | E1 and chamber temp. is displayed alternately. | Pulse tone | Running with defrost sensor |
| | If the thermal sensor is short circuited. | E2 and chamber temp. is displayed alternately. | Pulse tone | Running with defrost sensor |
| | If the defrost sensor is disconnected. | E3 and chamber temp. is displayed alternately. | ----- | ----- |
| | If the defrost sensor is short circuited. | E4 and chamber temp. is displayed alternately. | ----- | ----- |

Note: The alarm buzzer can be canceled by turning the buzzer switch to OFF.

# MAINTENANCE

## ⚠WARNING

Disconnect Always disconnect the power supply to the unit prior to any repair or maintenance of the unit in order to prevent electric shock or injury.

Ensure you do not inhale or consume medication or aerosols from around the unit a the time of maintenance. These may be harmful to your health.

## Cleaning

① Clean this unit once a month. Regular cleaning keeps the unit looking new.
② Use a dry cloth to wipe off small amounts of dirt on the outside and inside of the unit and all accessories. If the unit is very dirty, use a neutral detergent.
③ After cleaning, wipe away the cleaner completely with a cloth washed by clean water.
④ Never pour water onto or into the unit. Doing so can damage the electrical insulation and may cause electric shock or short circuit.
⑤ The compressor and other mechanical parts are completely sealed. This unit requires absolutely no lubrication. There is a fan behind the compressor, so be very careful if you stick your hand into this part of the unit.

## Replacement of fluorescent light

① Disconnect the power supply plug.
② Remove all shelves or drawers.
③ Remove the two screws fixing the lamp shade.
④ Pull the fluorescent light downwards and take it out.
⑤ Replace the light.
⑥ After the replacement, install the shade to it original position.

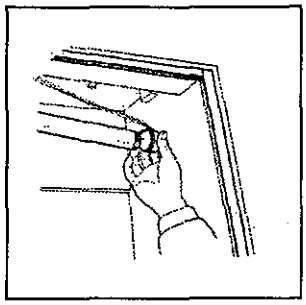

## Cleaning of evaporating tray

① Clean the evaporation tray twice or three times in a year. The evaporating tray is placed in the rear and bottom side of the unit.
② Remove the fix plate by pulling the clip towards front.
③ Pull the evaporating tray towards front and clean it completely.
④ After the cleaning, replace the fix plate to its original position.

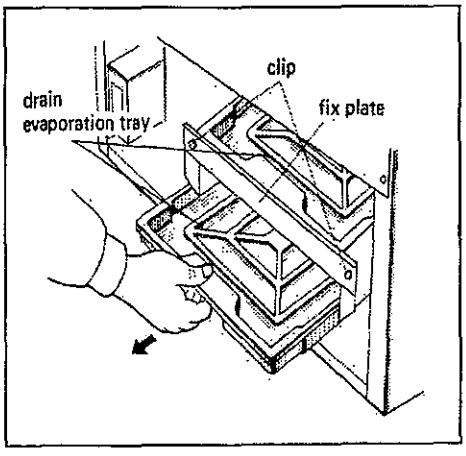

# TROUBLE SHOOTING

If the unit malfunctions, check out the following before calling for service.

1. If nothing operates even when switched on
1) Is unit connected to the power supply?
2) Is there a power failure?
3) Is the fuse blown or the circuit breaker inactivated?

2. When alarm is activated
When alarm lamp and buzzer are activated, follow procedures, to determine a cause.
1) On start-up
Does the temperature in the unit match set value?
2) In use
Was the door kept opened for long time? Were containers of high temperature (load) put in the unit? In this case, alarm is removed automatically by running the unit for several hours.

3. When unit does not get cold enough
1) Is air exhaust vent blocked up with containers?
2) Was a large amount of warm product put in the unit?
3) Is there nearly heat source?
4) Is the door opened frequently?
5) Is ambient temperature too high?
6) Is the unit in direct sunlight?
7) Is the door securely closed?
8) Is the door seal damaged or foreign substance inserted between door gaskets?

# ENVIRONMENTAL CONDITIONS

This equipment is designed to be safe at least under the following conditions:

1. Indoor use;
2. Altitude up to 2000 m;
3. Ambient temperature 5℃ to 40℃;
4. Maximum relative humidity 80% for temperature up to 31℃ decreasing linearly to 50% relative humidity at 40℃;
5. Mains supply voltage fluctuations as stated by the manufacturer;
6. Transient overvoltages according to Installation Categories (Overvoltage Categoires) II; For mains supply the minimum and normal category is II;
7. Pollution degree 2 in accordance with IEC 664.

# DISPOSAL OF UNIT

## ⚠ WARNING

When the unit is stored in an unsupervised area for an extended period, ensure that children do not have access and make sure the doors cannot be closed completely.

The disposal of the unit should be undertaken by appropriate personnel. Always remove doors to prevent accidents such as suffocation.

# SPECIFICATIONS

| Name | Pharmaceutical Refrigerator | |
|---|---|---|
| Model | MPR-311(H) | MPR-311D(H) · MPR-311DR(H) |
| External dimensions | W800 x D450x H1800 (mm) | |
| Internal dimensions | W720 x D350x H1435 (mm) | |
| Effective capacity | 340 L | |
| Exterior | Acrylic finish baked on zinc galvanized steel | |
| Interior | Acrylic finish baked on zinc galvanized steel | Stainless steel |
| Door | Double layer pair glass/steel plate, Heat ray reflection film, 4 doors | |
| Insulation | Rigid polyurethane foamed-in place (CFC-FREE) | |
| Shelves | 5 pcs. (MPR-311DR(H); 3 drawers) | |
| Cooling method | Forced cool air circulation | |
| Compressor | Hermetic type, Motor output; 160 W | |
| Fan motor | Output; 1 W | |
| Condenser | Fin tube type | |
| Evaporator | Wire tube type | |
| Refrigerant | R-412A (TP5R) | |
| Defrosting | Forced type, Fully automatic | |
| Defrost heater | 114 W | |
| Temperature controller | Electronic control system | Microprocessor control system |
| Thermometer | Alcohol type | Digital type |
| Fluorescent light | White light 20 W x 1 | |
| High temp. alarm | Buzzer, High temp. alarm lamp ON | Buzzer, High temp. alarm lamp ON, Flash of display |
| Low temp. alarm | Buzzer, Defrost lamp ON | Buzzer, Defrost lamp ON, Flash of display |
| Door alarm | ----- | Door check lamp ON, Buzzer after delay of 30 seconds |
| Accessories | Key; 1set, Bottom plate; 1 pc. Shelf; 5 pcs. (MPR-311DR(H); 3 drawers) | |
| Option | Automatic temperature recorder MTR-0620LH) | |
| Weight | 90 Kg | 90 Kg (MPR-311D(H))<br>95 Kg (MPR-311DR(H)) |

# PERFORMANCE

| Model | MPR-311(H) · MPR-161D(H) · MPR-311DR(H) | | | |
|---|---|---|---|---|
| Temperature control range | +2℃ to +14℃ | | | |
| Usable ambient temperature | -10℃ to +35℃ | | | |
| Noise level | 38 dB(A scale) | | | |
| Maximum pressure | 1646 kPa | | | |
| Rated voltage | AC 110V | AC 115V | AC 220V | AC 220 to 240 V |
| Rated frequency | 60 Hz | 60 Hz | 60 Hz | 50 Hz |
| Rated power consumption | 193 W | 193 W | 193 W | 181 W |

**Note** : Design or specifications will be changed without notice.

# ⚠ CAUTION

**Please fill in this form before servicing.**
**Hand over this form to the service engineer to keep for his and your safety.**

# Safety check sheet

1. Refrigerator contents : ☐Yes ☐No
   Risk of infection: ☐Yes ☐No
   Risk of toxicity: ☐Yes ☐No
   Risk from radioactive sources: ☐Yes ☐No

   (List all potentially hazardous materials that have been stored in this unit.)
   Notes :

2. Contamination of the unit
   Unit interior ☐Yes ☐No
   No contamination ☐Yes ☐No
   Decontaminated ☐Yes ☐No
   Contaminated ☐Yes ☐No
   Others:

3. Instructions for safe repair/maintenance of the unit
   a) The unit is safe to work on ☐Yes ☐No
   b) There is some danger (see below) ☐Yes ☐No
   Procedure to be adhered to in order to reduce safety risk indicated in b) below.

Date :
Signature :
Address, Division :
Telephone :

| Product name : Pharmaceutical Refrigerator | Model : MPR-311(H) MPR-311D(H) MPR-311DR(H) | Serial number : | Date of Installation : |
|---|---|---|---|

Please decontaminate the unit yourself before calling the service engineer.

SANYO

SANYO Electric Co., Ltd.
Refrigerating Products Division
1-1-1, Sakata Oizumi-Machi,
Ora-Gun, Gunma 370-0596 Japan

7FB6P10124000

Printed in Japan