Scotsman®
Ice Systems

Technical Manual for
Model UF424X and UN324X

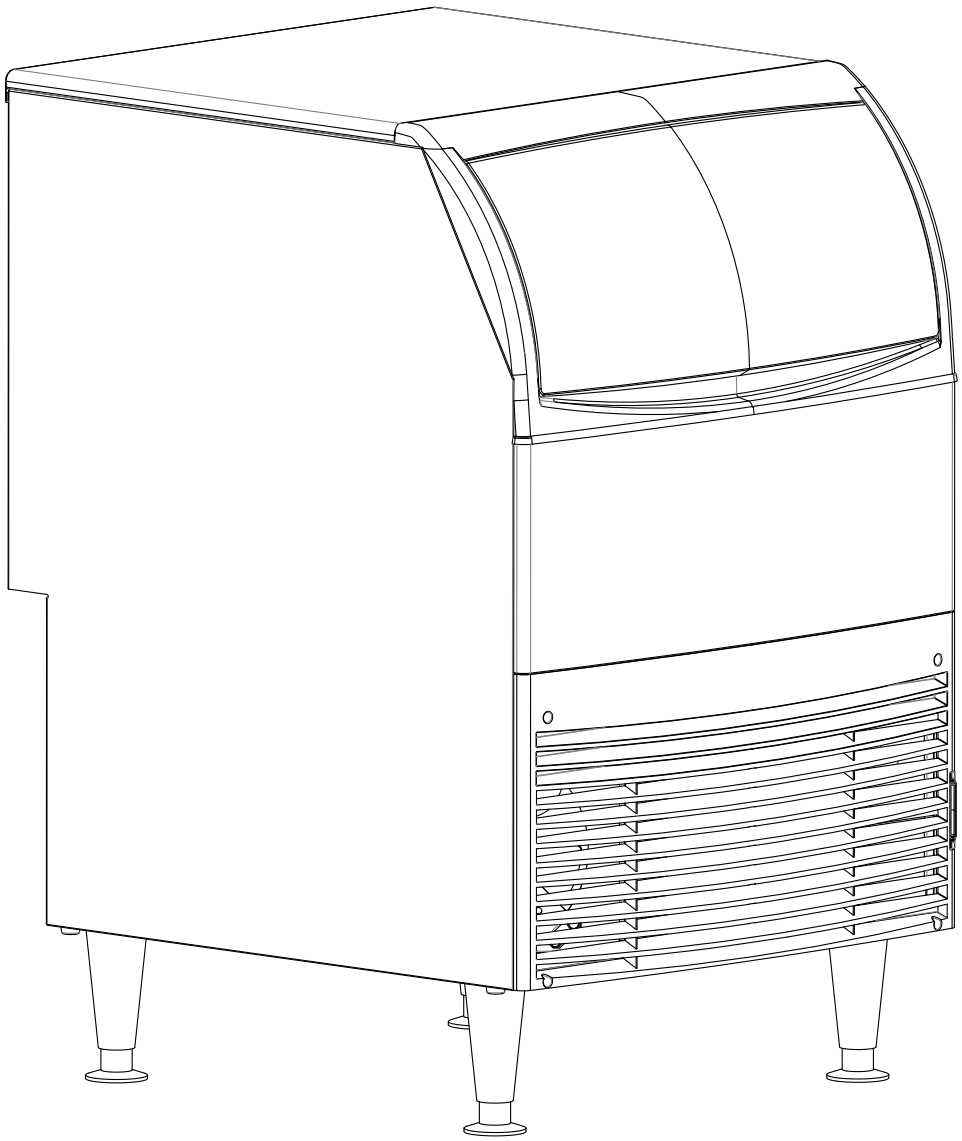

Safety Information

Important Safety Information. Make sure to read through fully to avoid severe injury or death.

WARNING

R290 Refrigerant is Flammable.
Flame can cause burns or property damage
Keep away from sources of fire



This ice machine contains **FLAMMABLE** refrigerant and improper use can result in fire or explosion. Do not use cigarettes, vapes, or cellphones near pipes or cables, as it can be a source of ignition or spark.

This ice machine must not be installed next to equipment with an open ignition source (ie. open flames, an operating gas appliance, or electric heater). Do not store explosive substances such as aerosol cans with a flammable propellant in this appliance.

WARNING: Do not use electrical appliances inside the food/ice storage compartments unless they are of the type recommended by the manufacturer.

WARNING: In order to reduce flammability hazards the installation of this appliance must only be carried out by a suitably qualified person.

This appliance must be installed according to the safety standard for refrigeration systems presented in ANSI/ASHRAE 15.

Do not install next to anything that continuously vibrates, avoiding excessive vibrations or pulsations.

Install in a well ventilated environment and ensure ventilation and outlets are not obstructed.

Properly secure electrical wiring and cabling for the machine to minimize wear, vibrations, corrosion, excessive pressure, sharp edges, or other adverse environmental effects that could cause damage to wiring over time.

Keep fire extinguisher nearby in case of emergencies.

WARNING: Do not damage the refrigerating circuit

Use a Scotsman recommended technician certified to repair R290 equipment.

Install ONLY Scotsman factory service parts. Use of non-OEM parts can be dangerous due to the design changes needed to safely use R290 refrigerant.

WARNING: Cancer and Reproductive Harm. Visit www.P65Warnings.ca.gov for details.

This appliance is not intended for use by persons (including children) with reduced physical, sensory or mental capabilities, or lack of experience and knowledge, unless they have been given supervision or instruction concerning the use of the appliance by a person responsible for their safety.

Children should be supervised to ensure that they do not play with the appliance.

Caution: This equipment should only be used on ice bins without electrical components or bins designed to be used with flammable refrigerants.



WARNING: Do not use means to accelerate the defrosting process or to clean, other than those recommended by the manufacturer. The appliance shall be stored in a room without continuously operating ignition sources



Do not pierce or burn.



Be aware that refrigerants may not contain an odor.



All installation, service, maintenance and decommissioning to be carried out by technicians certified to handle **FLAMMABLE REFRIGERANTS**.



Install in a well-ventilated environment and ensure ventilation and outlets are not obstructed.



When breaking into the refrigerant circuit to make repairs – or for any other purpose – conventional procedures shall be used. However, for flammable refrigerants, it is important that best practice be followed, since flammability is a consideration. The following procedure shall be adhered to:

a) safely remove refrigerant following local and national regulations;
b) purge the circuit with inert gas;
c) evacuate;
d) purge with inert gas;
e) open the circuit by cutting or brazing.



The refrigerant charge shall be recovered into the correct recovery cylinders if venting is not allowed by local and national codes. For appliances containing flammable refrigerants, the system shall be purged with oxygen-free nitrogen to render the appliance safe for flammable refrigerants. This process might need to be repeated several times. Compressed air or oxygen shall not be used for purging refrigerant systems. For appliances containing flammable refrigerants, refrigerants purging shall be achieved by breaking the vacuum in the system with oxygen-free nitrogen and continuing to fill until the working pressure is achieved, then venting to atmosphere, and finally pulling down to a vacuum. This process shall be repeated until no refrigerant is within the system. When the final oxygen-free nitrogen charge is used, the system shall be vented down to atmospheric pressure to enable work to take place. Ensure that the outlet for the vacuum pump is not close to any potential ignition sources and that ventilation is available.



Ensure that the leak detection equipment being used is suitable for use with **FLAMMABLE REFRIGERANT**; i.e., non-sparking, adequately sealed or intrinsically safe.



WARNING: This appliance should be stored in a room without continuously operating open flames (for example an operating gas appliance) or other potential ignition sources (for example an operating electric heater, hot surfaces).

UF424X / UN324X Technical Manual
Introduction

To the owner or user: the service manual is intended to provide you and the maintenance or service technician with the information needed to install, startup, clean, maintain and repair this product. Observe any caution or warning notices. They are important and provide notice of potential hazards.

Keep this manual for future reference.

If additional technical information is needed, go to Scotsman's website, www.scotsman-ice.com.

Note: This is a commercial product. If service is needed on a unit in a residence, warranty may be limited. Use a commercial service company. Locate one from the Scotsman website: www.Scotsman-ice.com

Table of Contents

Specifications .. 5
Cabinet Drawing . 6
Plan and Front Views .. 7
Side and Back Views .. 8
Operational Data .. 9
Placement .. 10
Installation . 11
Initial Start up .. 12
Maintenance and Cleaning .. 13
Condensers and Air Filter Cleaning .. 15
Operation .. 16
Basic Troubleshooting . 17
Controller Functions . 18
Controller Details .. 19
Controller Diagnostics . 20
Electrical Sequence .. 21
Testing Compressor .. 22
Replace Compressor .. 23
Replace Fan Motor .. 24
Testing Sensors .. 25
Panel Removal .. 26
Remove Ice Storage Bin . 27
Remove Gear Reducer .. 28
Remove Auger . 29
Replace Evaporator .. 30
Replace Auger Motor .. 31
Prep to Replace Water Seal or Bearings .. 32
Replace Water Seal and Auger Bearings .. 33
Replace Electrical Components . 34
Schematic Diagram .. 35
Wiring Diagram .. 36
Decommissioning .. 37
Decommissioning .. 38

This ice maker is designed to be installed indoors, in a controlled environment. Although it can operate in a wide range of air and water temperatures, it will provide the best performance if not subject to extremes.

Air Temperature Limitations

- Maximum: 100° F or 38° C
- Minimum: 50° F or 10° C

Water Temperature Limitations

- Maximum: 100° F or 38° C
- Minimum: 40° F or 4.4° C

Water Pressure, Potable

- Maximum: 80 PSI or 5.5 BAR
- Minimum: 20 PSI or 1.3 BAR

Water Pressure, Condenser inlet

- Maximum: 145 PSI or 10 BAR
- Minimum: 20 PSI or 1.3 BAR; can be as low as 5 PSI or 0.3 BAR if clean and supplied with 45° F water.

Condenser GPM

- 70°F or 21°C water: 0.25 GPM or 0.95 LPM
- 50° F or 10°C water: 0.15 GPM or 0.57 LPM

Voltage 115 volt models

- Maximum 126 VAC
- Minimum 104 VAC

Water Conductivity:

- Minimum:10 micro Siemens/CM

RO water may be supplied to the potable water system, but if it has less than the above conductivity, the water level sensor will not detect water and the unit will not make ice.

Deionized water is not recommended due to its potential corrosive nature and any damage caused by DI water will not be covered by warranty.

Operating the machine outside of any of the above limitations is considered abuse and any resulting damage is not covered by warranty and could cause a complete loss of warranty coverage.

Warranty Information

The warranty statement for this product is provided separately from this manual. Refer to it for applicable coverage. In general warranty covers defects in material or workmanship. It does not cover maintenance, corrections to installations, or situations when the machine is operated in circumstances that exceed the limitations printed above.

Product Information:

The UF424X produces flaked ice and the UN324X produces nugget ice. The ice is stored in an insulated bin with ice level automatically maintained by the control system.

A back flow preventer may be required by local plumbing codes.

Has a 5.5 ft. power cord with NEMA 5-15P plug.

Air cooled models flows in the right front and out the left front and include a cleanable air filter.

Legs are provided, thread size is 5/8-11. Replacement leg kit number is KLP7.

Machine may be installed without legs.

For available options and kits, see sales literature.

Scotsman Ice Systems are designed and manufactured with the highest regard for safety and performance. They meet or exceed UL563, verified by Intertek, ETL.

Cabinet Drawing

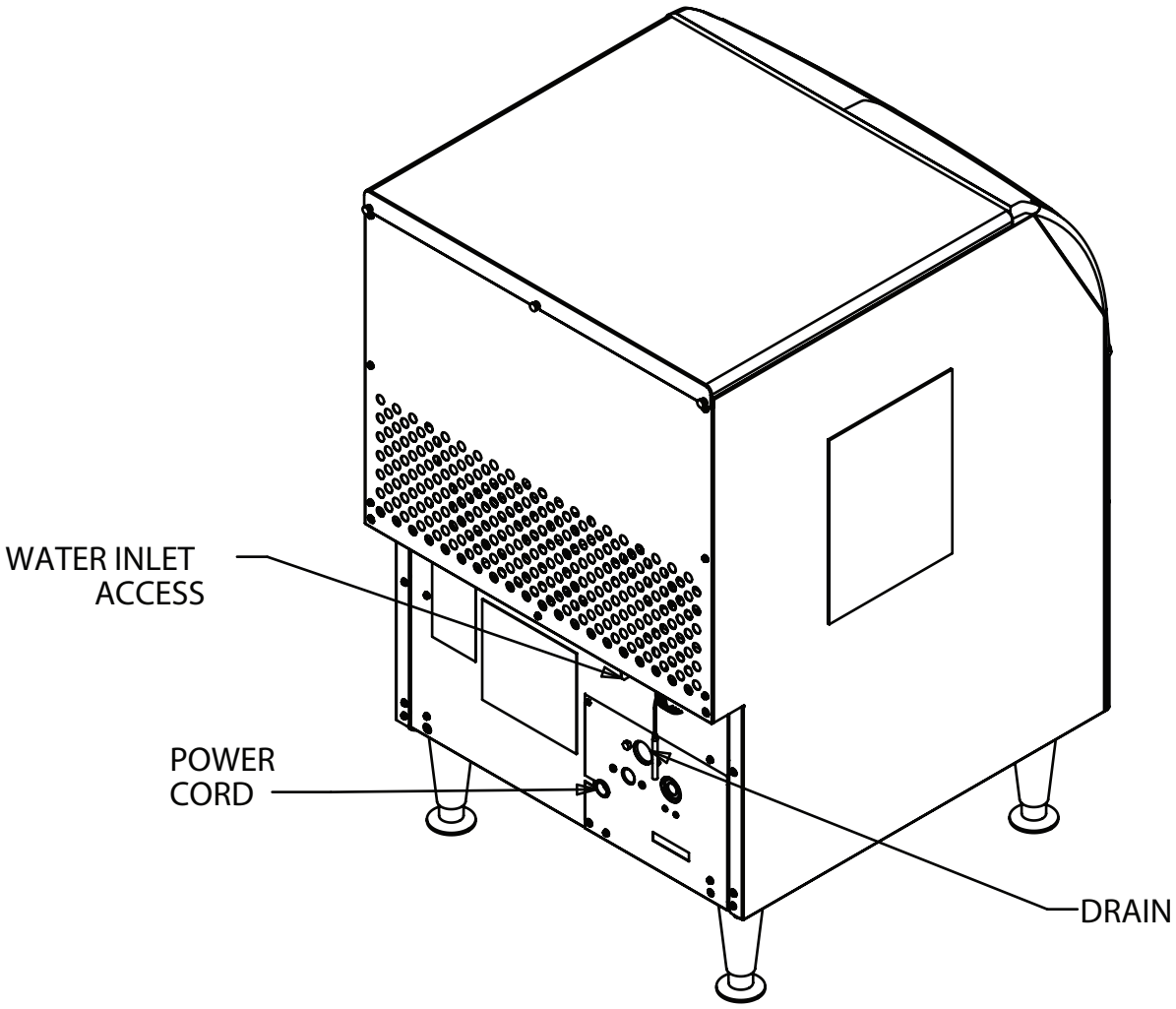

Plan and Front Views

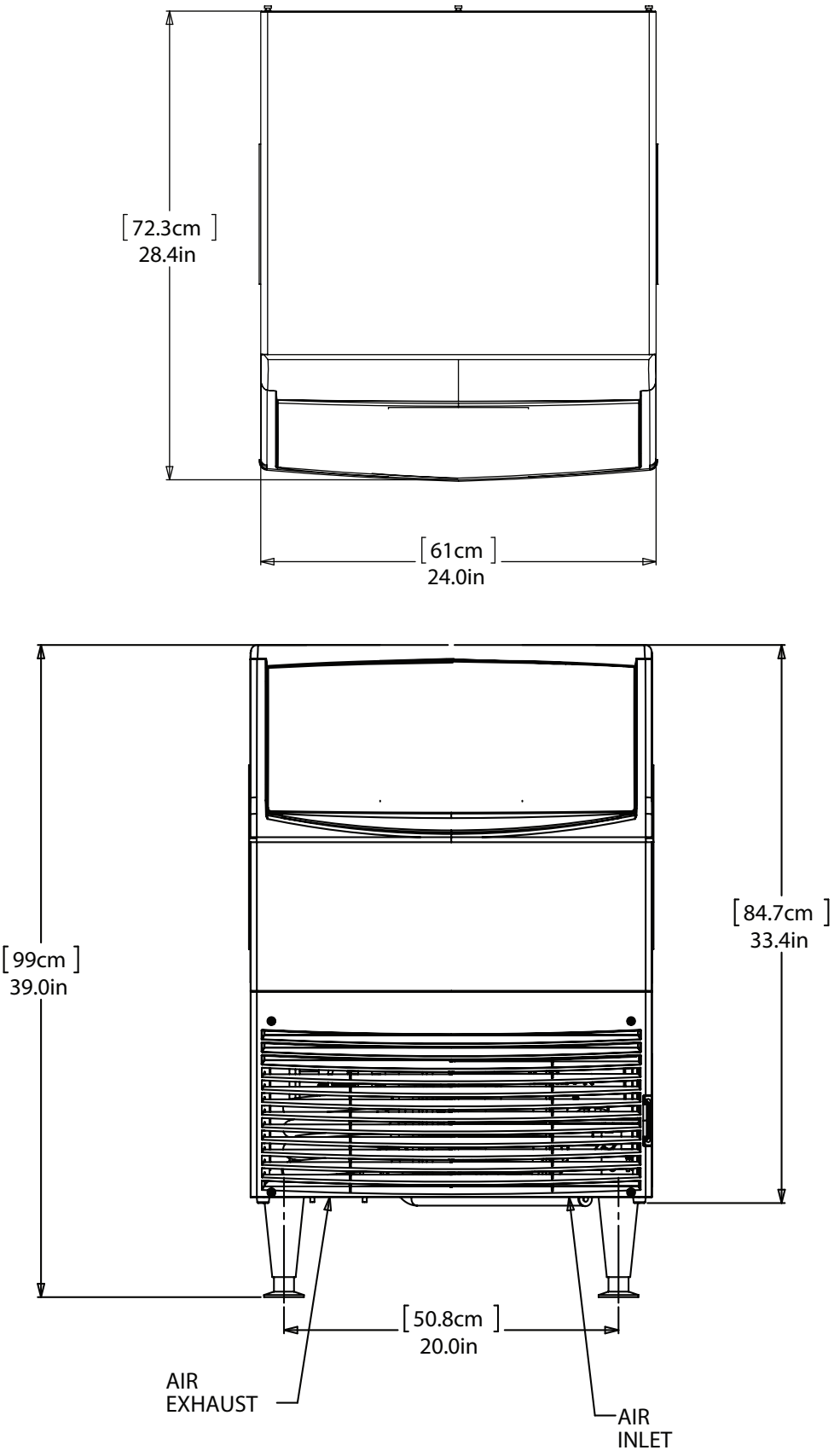

Side and Back Views

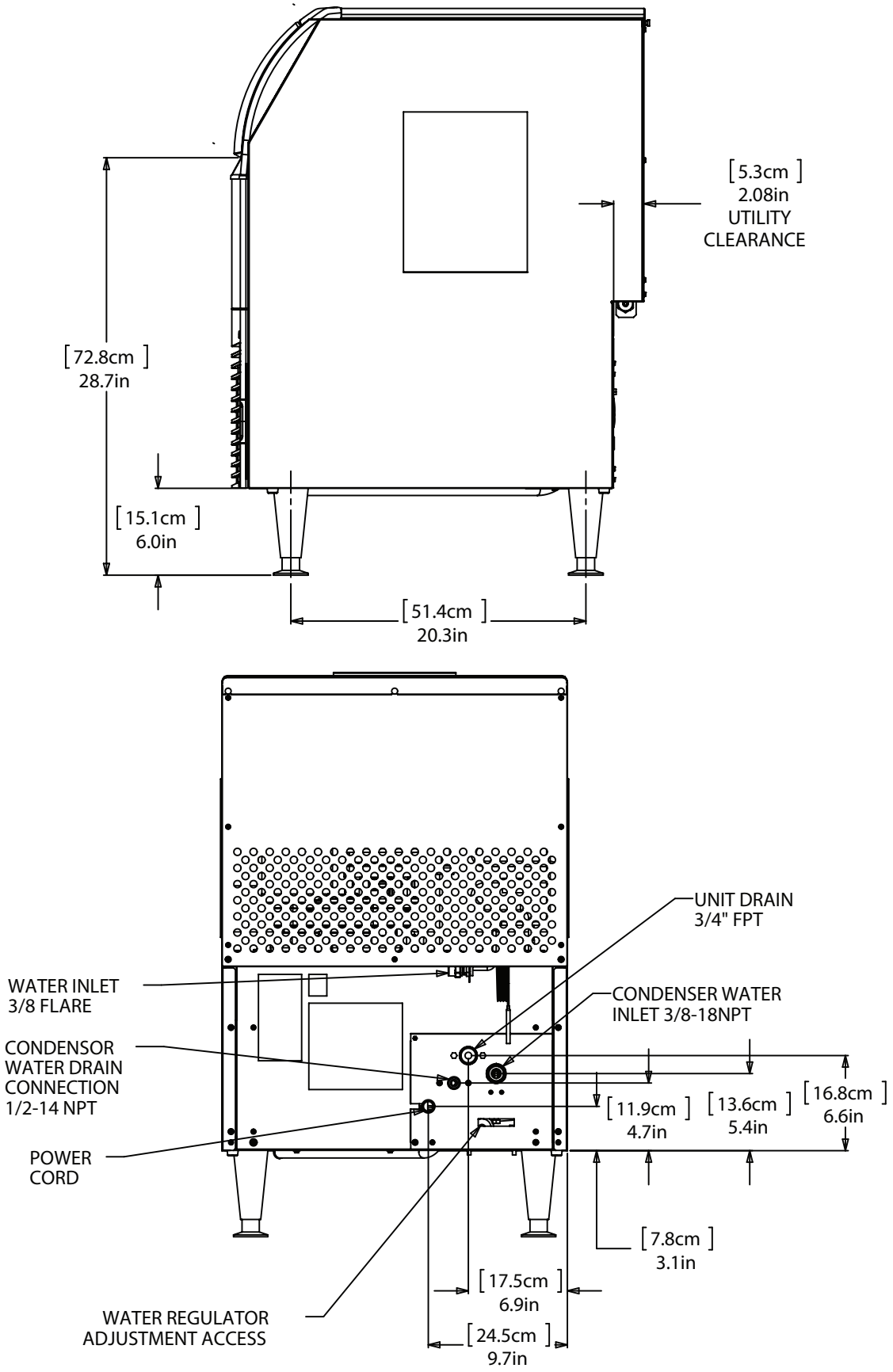

Operational Data

Model	Electrical (Volts/Hz/Phase)	Condenser	High Pressure Switch (PSIG)		Refrigerant Charge (R-290) Ounces	Maximum Fuse Size or Breaker (Amps)
			Cut Out	Cut In		
UF424AX-1A / UN324AX-1A	115/60/1	Air	260	190	4.75	15
UF424WX-1A / UN324WX-1A	115/60/1	Water	260	190	4.50	15

Model	Typical Watts	Typical Amps	Auger Motor Amps	Compressor Amps
UF424AX-1A / UN324AX-1A	514 - 560	6.0 - 6.3	1.7	6.4
UF424WX-1A / UN324WX-1A	447 - 506	5.0 - 5.4	1.7	6.4

Model	Condenser	70/50 Suction Pressure (PSIG)	90/70 Suction Pressure (PSIG)	70/50 Discharge Pressure (PSIG)	90/70 Discharge Pressure (PSIG)
UF424AX-1A / UN324AX-1A	Air	6 - 8	8 - 9	130 - 135	180 - 185
UF424WX-1A / UN324WX-1A	Water	6 - 8	6 - 8	135	135

Note: 70/50 and 90/70 refer to the air and water temperatures (in degrees F) the machine was tested in. All field conditions are unique, but at temperatures near those listed a field machine will have similar results.

Placement

The location of the equipment should be selected with care. Consideration should be given to allow adequate space for air cooled models to breathe.

The ice machine is not designed for outdoor use. It must be installed indoors, in a controlled environment. The air and water temperatures must not exceed rated limits.

Scotsman assumes no liability or responsibility of any kind from products manufactured by Scotsman that have been altered in any way, including the use of any part and/or other components not specifically approved by Scotsman.

Scotsman reserves the right to make design changes and/or improvements at any time.

Specifications and design are subject to change without notice.

Airflow on air cooled models:

Intake from the right grill

Exhaust from the left grill

Do not install where this air flow is blocked.

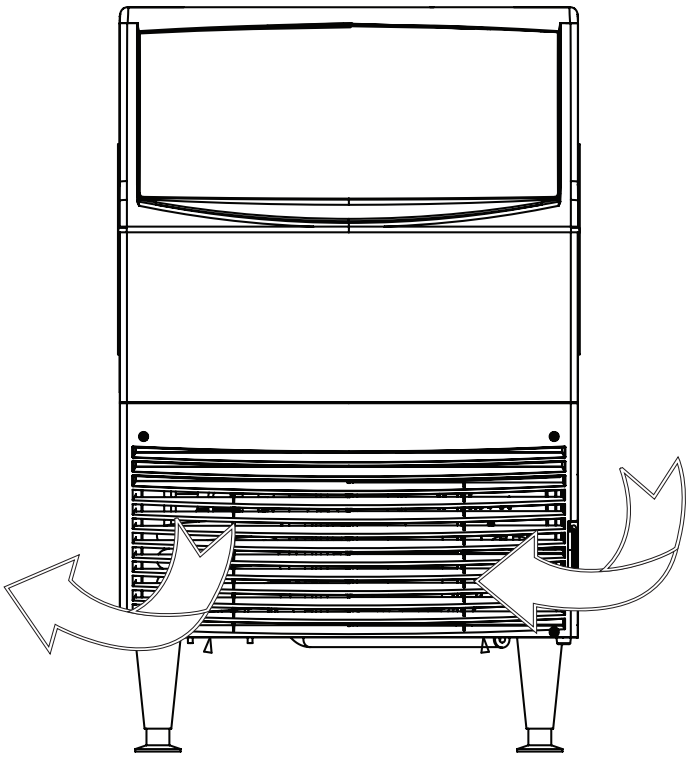

Airflow

The power outlet should be located within the length of the supplied power cord. If legs will be used, allow space for the total cabinet height.

Air cooled models in a small room will require ventilation to exhaust heat from the condenser. The condenser fan and motor will generate some noise while the machine is running. Noise sensitive areas should consider water cooled equipment or locate the machine where the noise from ice making will not objectionable.

Unpack

1. Separate the carton from the shipping pallet

2. Inspect for any hidden shipping damage. If any is found, retain carton and notify carrier for potential claim. Shipping damage is not covered by warranty.

Caution: Tip Over hazard to prevent injury or damage to the machine please use caution when lifting the unit. It will easily tips to the rear.

3. Remove bolts holding machine to pallet.

4. Install the legs. The legs are to be screwed into the same holes the shipping bolts were removed.

5. Remove the protective plastic covering the panels. The longer it is left on the panel, the more difficult it will be to remove it.

Spacing:

No additional spacing is required at the top or sides. However, suggested minimum side clearance for the installation is 1/8'' or 3.2 mm and suggested minimum top clearance is 1/4" or 6.4 mm.

The machine may be installed with 0 clearance at the back. Do not block louvers at the front of the cabinet.

Pre Installation:

Water supplied to the ice machine should be filtered. Install a filter system that filters out suspended solids. It may be necessary to add a coarse pre-filter ahead of the fine filter.

Inspect the place where the ice machine is to be installed. Check for:

- Space for the cabinet
- Water Supply
- Drain Availability
- Electrical Power Supply

Note: The building drain inlet must be lower than the drain outlets at the back of the ice machine. The water supply must have a hand shut off valve accessible when the unit is installed.

For the Plumber

1. Connect cold potable water to the 3/8'' male flare behind the lower back panel. A water filter is recommended. Flush the water line prior to connecting to the ice machine.

A loop of copper tubing may be used between the ice machine and the water supply. This will allow the ice machine to be pulled out from its installed location without disconnecting water. No back flow preventer is required in the potable water line. This is provided by the reservoir seat, which is above the reservoir water level and cannot be siphoned

2. Connect a drain tube to the drain fitting. Drain tubes for a water cooled machine should be run separately. The bin drain fitting is 3/4'' FPT. And it is plastic. Do not overheat.
   - Drain tube material must be rigid and meet local code.
   - Traps in the bin drain line without vents ahead of them will cause poor draining
   - The bin drain must be vented if there is a long horizontal run 5 feet or more. All drains are gravity and must have a minimum fall of 1/4'' per foot of horizontal run.
   - Maintain the air gap required by local code between the end of the drain to, and the building drain receptacle.
   - Drain tubing should be insulated to prevent condensation from forming on the tubing.

3. Water cooled models have a separate 3/8" FPT fitting for condenser water inlet. DO NOT FILTER water to this connection. The condenser drain is1/2'' FPT and does not need a vent.

For the Electrician

This is a cord-connected unit and must be on a separate single phase power supply. Check the name plate for the correct voltage. The maximum fuse size for this circuit should be 15 A, per the nameplate use fuses or HACR circuit breaker.

Follow all local codes. This unit must be grounded. Do not use extension cords and do not disable or bypass the ground pin on electrical plug.

After utility connections

1. Level the cabinet, use the leg levelers on the end of the legs to adjust to cabinet height. Legs should have been installed when the unit was unpacked.
2. Wash the bin and hood. If desired, the interior of the bin could be sanitized.
3. Locate the scoop, wash it and have it available for use when needed.

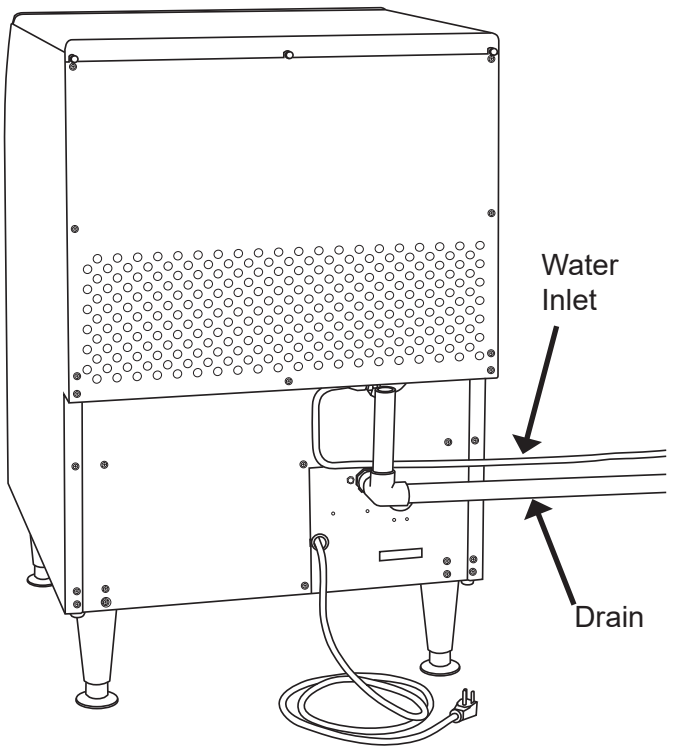

Utility Connections

Final check list:

	Ice machine is installed indoors with air and water temperature controlled within the limitations detailed in this manual
	Ice machine is level in its final position
	Electrical disconnect (switch or plug as required) is within sight of the installed machine
	Electrical circuit is dedicated to this ice maker
	Voltage has been confirmed within the specifications in this manual and the name plate on the ice maker
	Plumbing connections are complete and tested for leaks
	Ice maker is installed with proper clearance, allowing for service and utility connections
	Water shut off valve installed near the ice maker

Start up:

1. Remove louvered front panel.
2. Open bin door and remove the inner panel, held in place by 4 thumb screws.
3. Open the water valve. Observe that water enters the water reservoir, fills and then shuts off. Check for leaks. Repair any leaks before going further.
4. Switch electrical supply on. Lights on controller will flash and then the power light will remain on.
   The code display will show *0.*
5. Push and release the On/Off button. The machine will start the ice making process. The code display will show *F*. Air cooled models will discharge warm air out the left side of the front panel. Water cooled models will discharge warm (about 120^0F/48^0C) water out of the condenser drain. In a few minutes, ice will begin to fall into the bin.
6. Push the on/off button to switch the machine off. Scoop out any ice in the bin.
7. Create a solution of sanitizer. Mix 4oz/118ml of NuCalgon IMS III and 2.5gal/9.5L of (90^0F/32^0C to 110^0F/43^0C) potable water to create a 200 ppm solution.
8. Sanitize bin by wiping all surface areas with the sanitizer solution. Allow to air dry.
9. Turn the ice maker on by pressing the on button.
10. Replace inner panel, front cover and louvered panel.
11. Give the owner/user this manual, instruct him/her in the operation and maintenance requirements of the unit. Make sure they know who to call for service.

Fill out the Customer Evaluation and Warranty Registration form, and mail it in to Scotsman or register the unit at Scotsman's website (www.scotsman-ice.com).

Once started, the ice machine will automatically make ice until the bin level sensors are blocked. This will happen once the ice piles up to the sensors. The typical ice level when the machine is off will be several inches below the door. When ice level drops from use or meltage, the ice machine will resume making ice.

Tip: To maximize ice storage scoop the ice to the sides of the bin.

Noise:

This is a commercial ice machine. It contains a powerful compressor, heavy duty gear reducer and, if air cooled, a fan motor. It will produce some noise when it is making ice. Every effort was made during its design to minimize the sound level but some is unavoidable.

Maintenance and Cleaning

There are 4 areas of maintenance

1. Ice making system
2. Photo eye ice level control system
3. Bin
4. Air cooled condenser and filters

Ice making System:
Remove Scale

1. Remove front panel.
2. Turn the machine off by pressing the on / off button.

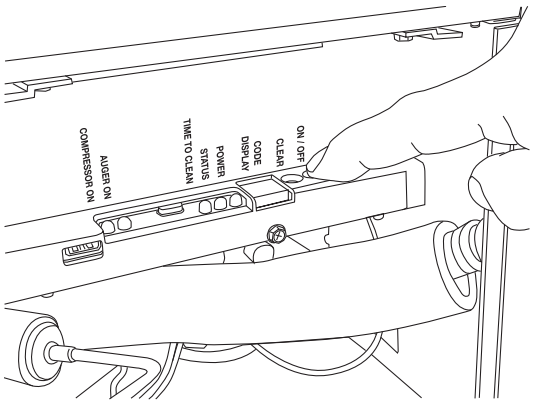

3. Empty the ice from the storage bin
4. Remove the inner panel using the 4 thumb screws.

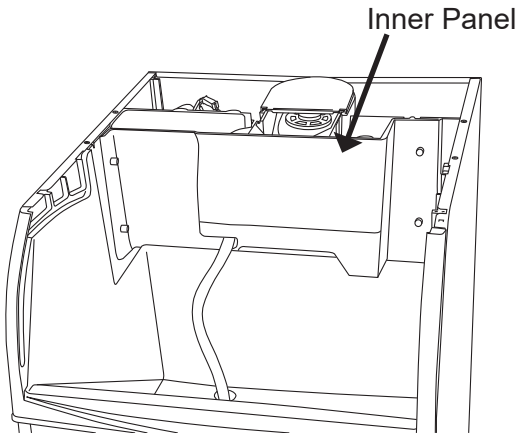

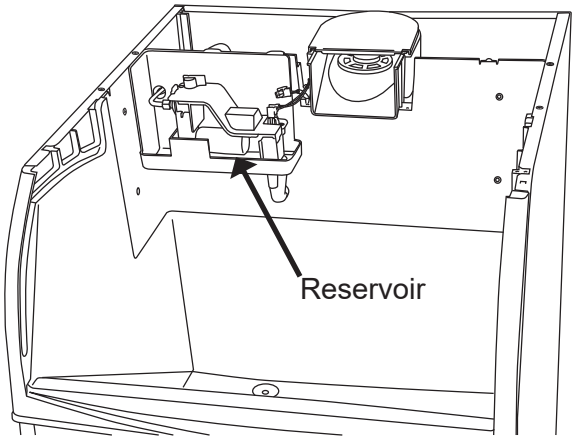

5. Remove the top cover from the reservoir.
6. Shut water supply off at the reservoir by turning the knob counterclockwise.

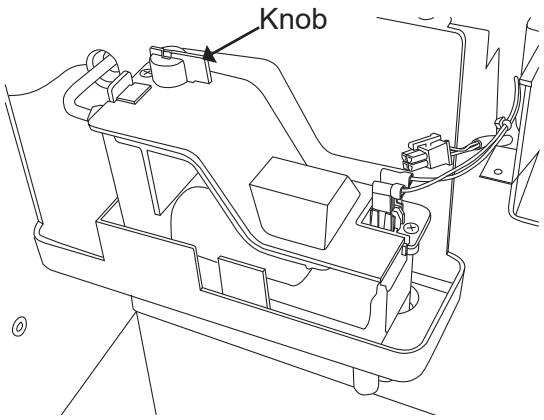

7. Locate the evaporator drain in the ice machine compartment. Unplug it and drain the evaporator.
8. Replug the drain.
9. Mix a solution of 1.5qt/1.4L of warm water (90^0F/32^0C to 110^0F/43^0C) and 4 ounces of Scotsman Clear 1 Ice Machine Scale Remover.

⚠CAUTION

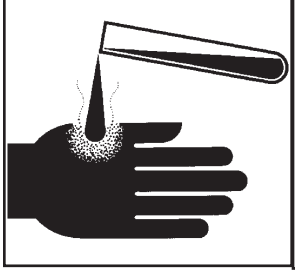

Ice machine cleaner contains acids. Acids can cause burns.

If concentrated cleaner comes in contact with skin, flush with water. If swallowed, do NOT induce vomiting. Give large amounts of water or milk. Call physician immediately. Keep out of the reach of children.

10. Pour the cleaning solution into the reservoir until it is full (a squirt bottle may be necessary to fill reservoir with cleaning solution).

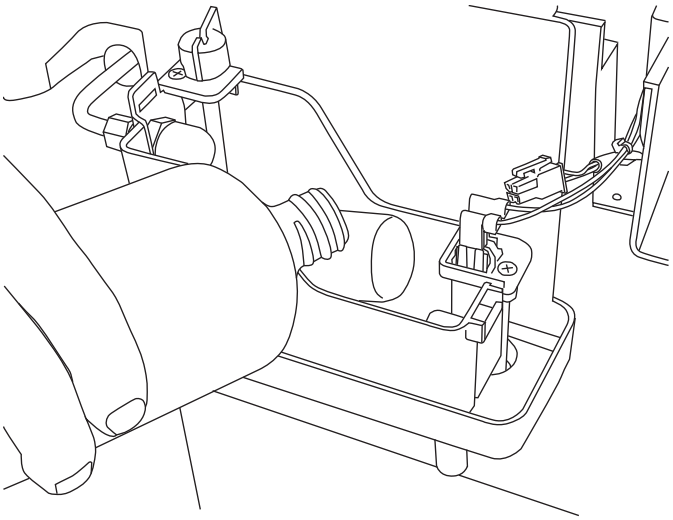

11. Push the clean button. The machine will operate the auger motor for approximately 20 minutes. Then it will start making ice with the cleaning solution.
12. Add remaining cleaning solution to the reservoir as ice is being made for the next 20 minutes. After the full 40 minutes (steps 11 & 12) the unit turn off.
13. Drain the solution from the reservoir by removing the plug. Once drained, replace the plug.
14. Pour clean water into the bin to melt any ice produced during the cleaning cycle.
15. Mix a solution of 4oz/118ml of Scotsman Clear 1 ice machine scale remover and 16oz/473ml of potable water. Use this scale remover solution for the water reservoir cover, ice discharge chutes, the storage bin and the inner front cover.

Sanitize Water System

1. Create a solution of sanitizer. Mix 4oz/118ml of NuCalgon IMS III and 2.5gal/9.5L of (90^0F/32^0C to 110^0F/43^0C) potable water to create a 200 ppm solution.
2. Pour the sanitizing solution into the reservoir until it is full and wait 2 minutes.
3. Turn on the water supply and press the ON /Off button to turn the ice machine on
4. Operate the machine for at least 15 minutes.
5. Drain the solution from the system by pulling the reservoir plug from the drain hose. Return plug when drained.

Photo Eye ice level control

1. Mix solution of 4 ounces of Clear 1 Ice Machine Scale Remover and 1.5qt/1.4L of 90^0F/32^0C to 110^0F/43^0C water.
2. Remove sensors from inner cover by removing the white c-clip .
3. Use cotton swab and cleaning solution to thoroughly clean photo sensors.
4. Rinse sensors with clean water.
5. Reinstall sensors in inner panel.

Bin

1. Use the same cleaning mixture to thoroughly clean bin surfaces.
2. Rinse with clean water.
3. Use sanitizer mix on all bin surface areas and areas that may contact the ice.
4. Rinse with clean water.

Filters and Air Cooled Condenser

The air filter located on the lower front grill will capture airborne dust during operation. As the dirt builds up, it begins to restrict air flow and causes the refrigeration system to work less efficiently. Clean the air filter regularly.

1. Remove the filter by sliding it to the right until it is clear of the ice machine.

Note: It is a snap fit and the snaps may be very tight. Pull hard with two thumbs.

2. Remove dust and dirt by washing the filter in a utility sink.
3. Reinstall filter in the ice machine.

Condenser

The condenser fins require semi annual cleaning. Use caution to prevent damage to the condenser fins.

1. Lightly brush dust from the condenser.
2. Use a vacuum to thoroughly clean the condenser.

Water cooled equipment may be connected to a closed loop recirculating system or to a regular water supply. See the pressure limits on page 3.

The included water regulating valve will vary the amount of water or coolant needed to maintain a constant discharge pressure. Higher coolant temperatures will result in increased coolant flow to maintain the discharge pressure set point.

That pressure is factory set to 135 PSIG. If needed, it may be field adjusted to that set point. An access port to the adjustment stem is available on the lower back panel.

In areas with highly mineralized water, the inside of the condenser may become coated with scale. When that occurs the amount of water used by the condenser will increase, as the water regulating valve opens further to keep the discharge pressure at the set point.

Scale on the inside of the condenser may be cleaned by circulating an acid solution with an auxiliary pump.

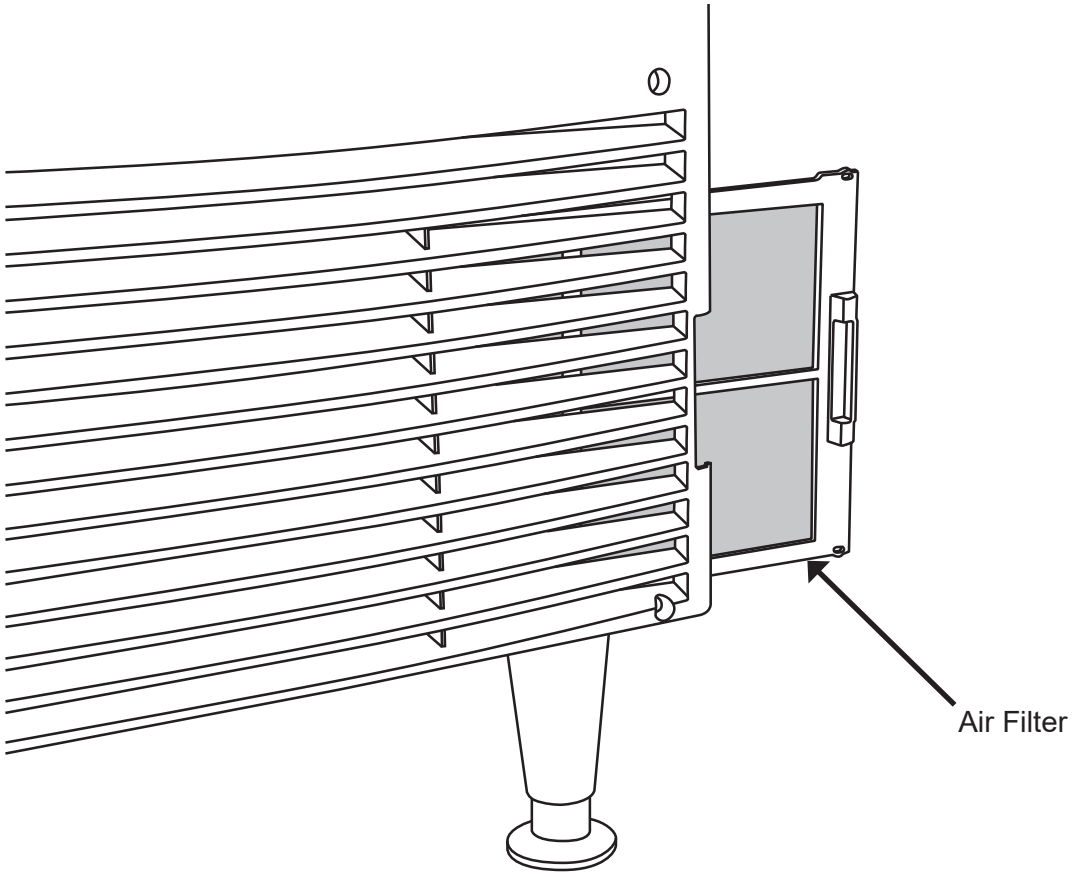

Remove and Clean the Air Filter

At initial start up there is no ice in the ice storage bin, so there is nothing blocking the infrared sensors that are used to control the on or off mode of the machine. A push of the on off button triggers the controller to begin ice making.

The controller checks for water using the continuity sensor in the reservoir. If that sensor indicates there is water, and the refrigeration pressure switch is closed, the controller connects power to the compressor, fan motor (if air cooled) and auger drive motor.

The compressor forces refrigerant to circulate causing the evaporator to become very cold, which takes heat from the water inside the evaporator's tube. That refrigerated space also contains the slowly rotating auger. Eventually enough heat is removed from the water to cause ice crystals to form. When enough ice crystals have formed the auger moves them vertically up the tube and the soft, wet ice is forced through the slots in the ice breaker. The limited area of the slots causes the soft ice to be forced together, forming either flaked or nugget ice, depending upon the design of the breaker. As ice exits the breaker or extruder, more water flows from the reservoir into the bottom of the evaporator tube.

Water replenishment by the gravity fed water is the key element in this ice making process. It provides a continuous heat load to the refrigeration system so that, as ice is made, an equal amount of water re-enters the system, keeping the system in balance. A flaker then, is a unique refrigeration system in that it is steady-state. Once the machine has begun to make ice the evaporator's temperature does not change as the replenished water keeps adding heat.

The ice slides down a chute into the insulated bin. The bin is not refrigerated. There is a drain at the bin's floor to let melt water out. As it is made, ice will pyramid under the chute and form a pile that gradually increases to the point that the top of the pile enters the chute, blocking the infrared light between the ice sensor's emitter and receiver, which signals the controller to stop making ice. The ice level at the first shut off may be less than later when the bin temperature has stabilized. Ice storage bin capacities are calculated by the bin's internal volume, so the amount of available ice may not equal the calculated quantity unless ice is distributed to the sides during use.

The shut off process begins when the controller opens the compressor relay, cutting the power to the compressor. The auger motor continues to operate to clear the evaporator tube of any ice that was in it. Then it is shut off. In normal operation when the ice is used or melts enough to expose the emitted infrared light to the sensor's receiver, and the compressor has been off for the preset amount of time, ice making will restart.

Sound

The normal sounds of this machine are the compressor, fan blade if air cooled, and auger drive motor. Occasionally there may be a slight crunching sound as ice is forced thru the extruder or breaker. A loud moaning noise could occur if ice is not sliding vertically up the evaporator tube. If it revolves with the auger, it will remain under refrigeration too long, and could even freeze to the evaporator wall. Then it becomes like chipped ice, which causes the gear reducer to be overloaded as it pushes the extra hard ice thru the extruder. That is known as a rotating freeze. The most likely cause of a rotating freeze is internal scale build up, especially on the auger.

Basic Troubleshooting

Symptom	Possible Cause	Probable Correction
No ice in bin	Unit in off mode or off on error code.	Remove front panel and check controller code display. Push ON/OFF button to reset. See pages 16 and 17 for further details.
	False bin full	b is showing in the display but the bin is not full. Check that there is good connection from the controller to the photo eye set. Replace photo eye set if no other cause can be found.
	No power to unit	Check for the power light on the controller. If not illuminated restore power.
	Auger motor not operating	Open windings. Check motor windings and replace if open.
		Gear reducer seized, replace gear reducer.
		Auger bearings seized, replace bearings and seal
		No power to auger motor, Auger light is ON. Replace controller.
		Code 2 in controller. Check that sensor rotates with motor and isn't loose. Tighten screw if loose.
		Code 1 in controller, replace auger motor.
	Compressor not operating	Contactor coil is open, check and replace if needed.
		Compressor hot and overheated, check start relay and start capacitor. Check system charge. Check TXV for high superheat.
		No power to compressor or contactor coil. Compressor light is ON. Replace controller.
		Compressor at room temperature, will not start. Check windings. If open, replace compressor. If not open, check/replace start relay and start capacitor.
	Compressor operating, auger turning, no ice is made	Check refrigeration system, TXV may be set to too much superheat or the system is low on refrigerant.
Excessive noise	Tubing contact	Check for tubes rattling and panels not tight
	Fan blade out of balance	Replace fan blade
	Compressor noisy	Replace compressor
Moaning noise when making ice	Water seal being compressed	Gear reducer bearing failure, replace gear reducer
Slow or Low production	Air filter is dirty	Clean air filter
	Condenser is dirty	Check and clean condenser
	Room and/or Water Temperature too high	Maximum production will be achieved at 70°F / 21°C air and 50° / 10°C water
	Restricted air flow to unit	Check and remove air flow restrictions
Unit cycles off and restarts	Loose electrical connection	Check power cord and outlet. Outlet may be worn, replace worn outlet.

Note: A damaged power cord must be replaced by the identical, OEM service part.

Controller Functions

All models use the same control system.

The electronic controller operates the compressor (with fan motor), and auger drive motor, It monitors:

• Reservoir water availability

• Storage bin ice level

• Refrigeration pressure

• Auger motor speed

• Auger motor rotation

Many of these are used to insure that the machine does not damage itself during use. For example, it is critical that it not attempt to make ice without water, so if the water sensor is dry, the machine will not make ice.

Switches - there are two switches:

• On/Off - to switch the machine on or off. Holding it in to shut off will stop ice making immediately.

• Clean - to engage the clean mode

Indicators - there are five LEDs:

• Power - Glows when controller has power

• Status - Glows when in ice making mode

• Time to Clean - Glows when it is time to clean the machine

• Auger - glows when the auger motor is on

• Compressor - glows when the compressor is on

There is also a code display, the codes are:

- 0 - - - for off
- F - - - for ice making
- b - - - for bin full
- E - - - for controller error
- C - - - for clean mode
- d - - - for test mode
- 1 - - - for auger rotation direction wrong
- 2 - - - for auger speed too slow
- 3 - - - for no water sensed
- 4 - - - for high refrigerant pressure

If a number code is triggered, the controller will stop ice making. A blinking code means it is a temporary condition. Example: A blinking F occurs during the ice making restart process; it stops blinking when the compressor starts.

The controller will automatically restart from a water interruption or power interruption or when a refrigerant pressure switch has automatically reset.

To reset the control when it has been manually locked out, Push and release the On/Off button to shut it Off and then Push and release it again to switch it On.

Note: The compressor will not restart for 2 minutes from the time it was shut off.

Controller Details

The controller has features for the service technician. Some details:

- Any auger motor failure is an immediate shut down. Because of the critical nature of that failure there is no auto restart from an auger error.
- An open Water Sensor (dry probes) will stop the machine. Because water can be restored at any time, whenever both Water Sensor probes are wet again AND the compressor has been off for at least two minutes, ice making will restart.
- An open High Pressure switch will stop the machine. Because the pressure switch is an automatic reset, when it closes AND the compressor has been off for at least two minutes, ice making will restart.
- Fault Code View: Push and HOLD the **clean button** (auger motor starts) **AND** then push and release the **on/off button** 3 times (auger motor stops) or until Status light is on. Release both. Pushing Clean will cycle thru the available codes, the total number of codes stored is 30.

Note: An existing error cause will not allow the fault codes to be read. Example: No water in the reservoir will trigger an immediate code 3 and any other codes cannot be read. Either correct the cause or jump out the sensor signaling the error and then go thru the Fault Codes View process.

- Clear codes: Only from Fault Code View: Push and HOLD the **Clean button** for about 3 seconds. The display code will blink 3 times. Release.
- The compressor will not restart until it has been off for at least 2 minutes.
- There is a Test Mode. The Test Mode operates each load in sequence to confirm that it is being powered by the controller.

To start Test Mode: Push and HOLD the ON/OFF button; at the same time, push and HOLD the CLEAN button. When a “d” appears in the code display, release the buttons, the test mode will begin.

Time (seconds)	On	Off
0	Compressor	Auger Gear Motor
10	Compressor and Auger Gear Motor	
20	Auger Gear Motor	Compressor
20	None	Auger Gear Motor, Compressor
40	None	All – Test Complete

- The Time to Clean indicator light glows when 6 months of power up time have elapsed. When it is on it does NOT stop ice making. It is cleared and reset when the Cleaning process has been completed.
- The Cleaning process, described in detail in the Maintenance section, is initiated by a press of the Clean button. The auger motor will be operating during the entire Clean mode, the compressor starts automatically to make ice with the scale remover solution. The scale is dissolved by the action of the scale remover solution and the auger’s motion.
- USB firmware updates may become available. To update the unit must be in Test Mode and then a USB stick with ONLY the update on it is inserted into the USB connector. L will be displayed during the Loading process. After a few seconds the LEDs begin scrolling up for about 75 seconds then the LEDs start scrolling down for about 20 seconds. At the end “0” is displayed. Unplug the USB drive.

Note: If during the update process the display flashes between “L” and “F” that means that the Load Failed. If that happens, unplug the USB drive, then power cycle the control board. If “0” is not displayed, press the On/Off button. The controller will revert to the original firmware.

Code or Light Action	Probable Cause	Suggested Action
0	Unit manually switched off	If desired, switch unit on.
F	Freeze mode	None, unit is making ice.
b	Bin sensors sense bin full	Check if bin is full.
E	Corrupted memory	Replace controller
C	Clean mode	Continue clean mode
d	Test mode	None, allow unit to finish test mode.
1	Auger motor rotated auger backwards.	Replace auger motor. Check water seal area for leaks, replace seal if leaking.
2	Auger motor stalled or operating slowly	Clean ice making system and retry. If unit shuts off again right after a reset, magnet rotor on motor shaft may be loose.
3	No water in reservoir	Restore water. If there is water, is it too pure? Are sensor wires connected?
4	High pressure cut out open	Check fan motor on air cooled or water supply on water cooled.
Status light is on	Unit is in ice making mode	Normal, may not be making ice if bin is full
Time to Clean light is on	Unit has not been cleaned for at least 6 months	Clean unit
Auger light is on	Auger motor is active	Normal when making ice
Compressor light is on	Compressor is active	Normal when making ice

Code E cannot be corrected in the field. Replace controller.

When electrical power is connected, and the prior mode was Off, the controller verifies the voltage and performs a self check. If the self check confirms the controller is working and that water is sensed in the reservoir, it will display an *0* and blink the Status light. If the prior mode was ice making, the controller will also perform a self check, when it is successful it will begin a restart process and display *F.*

If no water is sensed, the controller will not allow ice making, but instead a *3* will show in the display, indicating that no water has been sensed. When water is sensed, and the bin control is calling for ice and at least two minutes have passed, the controller will automatically start ice making.

Note: A failure of the self check will result in the controller displaying an *E* and no other action will occur.

After a successful restart, the controller will switch on the compressor and auger motor to begin ice making. The controller's compressor relay supplies power to the contactor coil while the auger motor's power is supplied directly from the controller's auger relay. If the unit is air cooled, the fan motor will also start, as it is electrically tied to the compressor contactor.

Ice making continues until the infrared light is blocked and the unit shuts down on bin full. It can also stop from any of these safeties:

1. Hi pressure cut out: 230 PSIG, automatic reset when the pressure drops to 190 PSIG. If triggered, it signals a severe condition where there was either no fan blade rotation on air cooled models or no water supplied to water cooled models.
2. Auger motor overload. Immediate shut down, manual reset. This signals a condition where the auger motor could not rotate the auger at the correct current.
3. Auger motor reversal. Immediate shut down, manual reset. Auger motor failure.

Manual reset - restart process: Push and release the On/Off button, unit will display *0*. To restart: push and release the On/Off button again.

Manually shut down either by pushing and releasing the On/Off button (compressor shuts off, auger motor continues for a minute) or by holding in the On/Off button until the machine completely stops.

Timings

- Status changes from Bin Full to Bin Empty: 10 second delay.
- Status changes from Bin Empty to Bin Full. 6 second delay
- Auger motor on after bin full or timed shut down: 60 seconds.
- Compressor restart after off: 2 minutes.
- Hi pressure control reset time: Varies by ambient and cabinet temperature. Longer in high temperatures.
- Clean mode: 20 minutes of auger only operation and then 20 minutes of auger and compressor operation. 40 minutes total.

The refrigeration system is steady-state. When in operation and stabilized, it will maintain nearly constant discharge and suction pressures.

Items that can affect that are:

- Irregular water flow
- Erratic thermostatic expansion valve
- Changes in room air temperature

Normally use of refrigeration gauges is unnecessary. If the unit is making ice properly, it is highly likely that all is normal. Refrain from attaching gauges, and then only use very short hoses to avoid changing the amount of refrigerant charge. See pressure information on page 7.

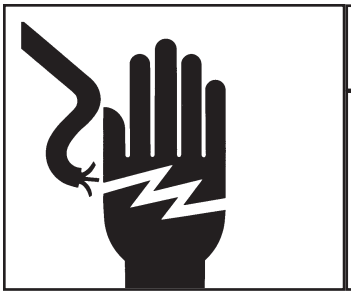

⚠WARNING

Electrical Shock Hazard

Disconnect electrical power before beginning

The compressor gets its power from the contactor, which is operated by the controller. It must be working or the compressor will be off.

Compressor Starting

The compressor uses a potential relay and start capacitor to provide starting power.

Potential relay: The contacts of this relay are normally closed and open when the compressor starts.

Compressor starts but current too high, overheats. If the relay contacts do not open, there will be current from the start capacitor. Replace the relay.

Compressor does not start. Relay contacts open, check for continuity. Replace relay if open. Start capacitor may have failed.

Capacitor Testing

Capacitors may be tested using a multimeter, but begin with a visual test. A good indication of a failed capacitor is one that is bulging or leaking.

If the capacitor looks ok, check it with a multimeter.

1. Discharge the capacitor.
2. Set a digital meter to a high resistance scale of at least 4k.
3. Put the probes on the capacitor terminals and observe the display. It should provide a reading and then show Open Line. If no reading, the capacitor has failed and should be replaced.

If the meter has a Capacitance setting, use it to measure the capacitance, replace if not near to the mfd listed on it.

Compressor Testing

Because the compressor is the hermetic type, the available testing methods are limited. Some items that can be measured are winding resistance and amp draw.

If the compressor does not start and a check with an amp meter shows it does not draw any current, it is likely it has an open winding or overload. Those can be checked using a multimeter.

If the compressor is hot the overload may be open. An open overload is an indication of a worn compressor, defective starting components or high superheat.

Note: Normal operating temperature of the compressor dome is 85 - 95 degrees F. - warm to the touch.

If the overload is open and the compressor is not hot, the overload itself could be the problem. Overloads also open due to high current and a shorted winding could cause that. Check for shorted or grounded windings with a multimeter.

High superheat is caused by lack of refrigeration, possibly from low charge or a TXV starving the evaporator.

Replace Compressor

The compressor can be replaced from the back.

Note: Always check electrical information on new compressor to be sure it is the correct voltage and phase.

1. Disconnect electrical power.

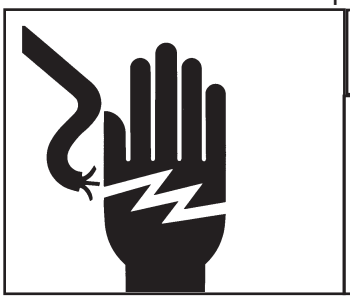

⚠WARNING

Electrical Shock Hazard

Disconnect electrical power before beginning

2. Remove lower back panel.
3. Disconnect wires from compressor terminals.
4. Recover refrigerant from the unit.
5. Remove hair pins holding compressor to chassis.
6. Disconnect suction, discharge and process tubes from compressor.
7. Remove compressor from unit.
8. Install new compressor in unit.
9. Reconnect suction, discharge and process tubes using the proper techniques of the refrigeration trade.
10. Remove and replace the dryer.
11. Attach a vacuum pump with micron gage to the system and evacuate it to 300 microns.
12. Reattach electrical wires to compressor terminals.
13. Replace the relay and capacitors with those from the kit.
14. Weigh in the nameplate charge.

Replace Fan Motor

Suggested tools include 1/4 inch drive ratchet set.

The fan motor is located behind the front panel.

1. Remove the front panel.

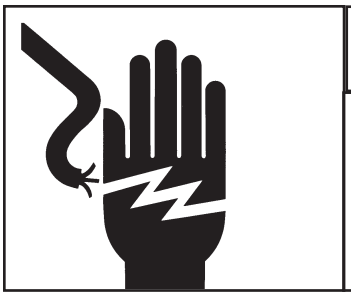

⚠WARNING

Electrical Shock Hazard

Disconnect electrical power before beginning

2. Disconnect electrical power.
3. Unplug motor from power harness.
4. Remove bolts (3/8 inch head) holding fan motor brackets to condenser.
5. Remove screws (1/4” head) holding fan motor to brackets.

Note: Fan blade is marked “Nut Side” for correct positioning on motor. Air flow direction is pull thru the condenser.

Replace condenser

The deck cover cannot be removed without disconnecting ice making system from the refrigeration system. The condenser must be replaced from the front.

Begin by taking the fan motor, blade and brackets off the condenser.

Then, from the front, remove the screw holding the condenser to the base.

Next, locate an access hole in the deck above the back condenser fastener. Remove that screw.

Photo-Eye Bin Control

The sensors consist of an emitter and a receiver. The emitter shines infrared light in a certain pattern at the receiver. The receiver's signal is checked by the controller to confirm proper reception. If confirmed, the controller starts or continues the ice making process.

Remove front panel.

Check controller code display. If the unit is in ice making mode (status light on) there will normally either be an F or a b displayed.

If the bin is full, b is displayed.

If the bin is not full and the unit is in ice making mode, F is displayed.

if the bin is not full and the unit is off, 0 is displayed.

False bin full: If the bin is not full and b is displayed:

1. Check for loose connection at the harness to the photo eye sensors.
2. Check for broken wire at sensor.
3. Check for something blocking the sensors, which can include scale buildup.

Note: There is no back up for the bin control. If it fails to shut the machine off, the bin will overfill.

Rotation Sensor

The sensor consists of a pick up sensor and a magnet. The pick up has a wire that connects to the controller. The magnet is in the rotating magnet holder on top of the auger motor. if the rotor is loose, it will not rotate and the sensor will shut the machine off for no rotation.

1. Remove front and left side panels.
2. Remove motor cover.
3. Check that rotor has magnet and is secure to motor shaft.

Note: Special thin open end wrench may be needed to hold motor shaft, it fits under the magnet rotor.

Replace Photo-Eye Bin Control

1. Remove top panel.
2. Disconnect photo eye bin control from the quick connect at the top back of the machine.
3. Lift up and remove both retaining clips holding sensor holders to evaporator cover.
4. Push sensor holders in towards the center until free of the evaporator cover.
5. Separate each photo eye sensor from its holder by pulling them apart.
6. Install new sensor into each holder. Push in until the rubber from the sensor meets the rubber sensor holder.
7. Return sensor holders to the chute and insert retaining clips.
8. Reconnect sensors to harness.
9. Return top panel to its normal position.

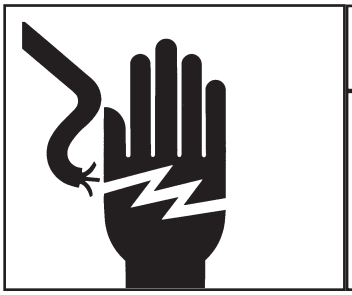

⚠WARNING

Electrical Shock Hazard

Disconnect electrical power before beginning

Panel Removal

Top Panel

Requires back access

1. Remove three thumbscrews holding top panel to back panel.
2. Pull top panel back slightly to release it from the top of the machine, then lift up and off the unit.

Note: Upper brace may come with top panel, it is not attached to the unit.

Door

1. Remove top panel.
2. Push door to full open, then lift back end up and remove two bushings. Retain the bushings.
3. Pull door up thru the slot until the last two bushings appear. Remove and retain them.
4. Pull door up and out of the machine

Side Panel

1. Remove front, top and back panels.
2. Remove two screws at each side of the top edge of the unit.

Note: The front screw on the top of each side will not be tightened fully, its correct position is slightly above the surface of the top so that the head will fit into the key hole slots in the top panel.

Remove Ice Storage Bin

Replacement of these components requires removal of the ice storage bin.

- Water Seal
- Bottom Bearing
- Evaporator
- Gear Reducer
- Condenser

1. Disconnect electrical power.

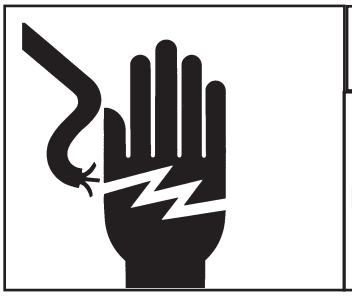

⚠WARNING

Electrical Shock Hazard

Disconnect electrical power before beginning

2. Shut water off to machine.
3. Drain the reservoir and evaporator (use drain tube under control box).
4. Discard any ice.
5. Pull unit out from under any countertop.

Note: Generous space around the machine will be needed

6. Remove front panel.
7. Remove top panel.
8. Remove door.
9. Remove both back panels.
10. Remove both side panels.
11. Remove evaporator cover.

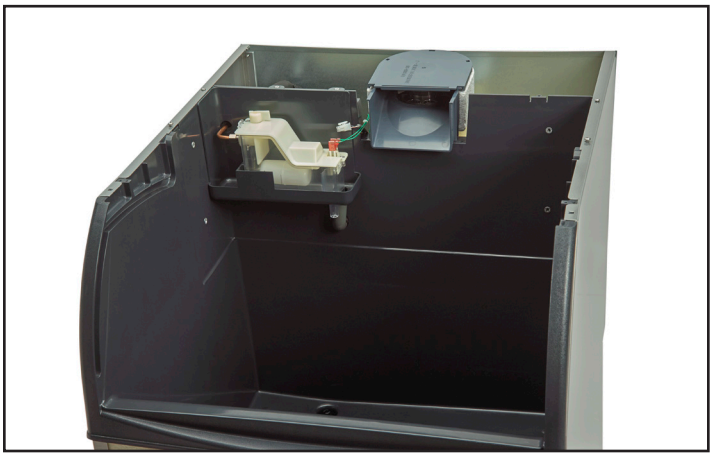

Evaporator Cover Removed

12. Push chute cover back and remove.
13. Unscrew ice sweep and remove.

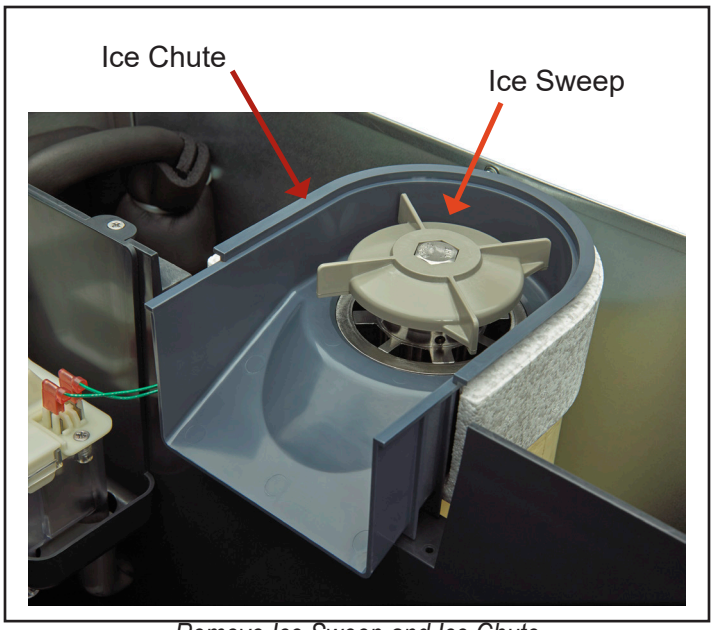

Remove Ice Sweep and Ice Chute

14. Lift up and remove chute.
15. Disconnect water inlet from reservoir float valve.
16. Disconnect evaporator water inlet from reservoir.
17. Pull water inlet tube back thru hole in bin.
18. Disconnect bin drain.
19. Lift bin assembly off chassis.



Remove Gear Reducer

Removal

Note: Below steps assume the bin has been removed.

Remove or melt out all ice.

1. Disconnect electrical power to unit.

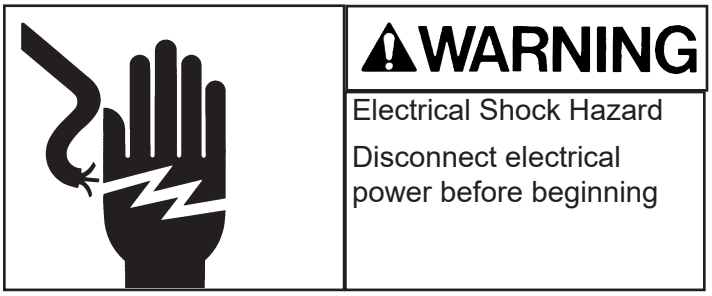

2. Disconnect wires to auger motor.
3. Remove 3 screws holding motor cover to motor.

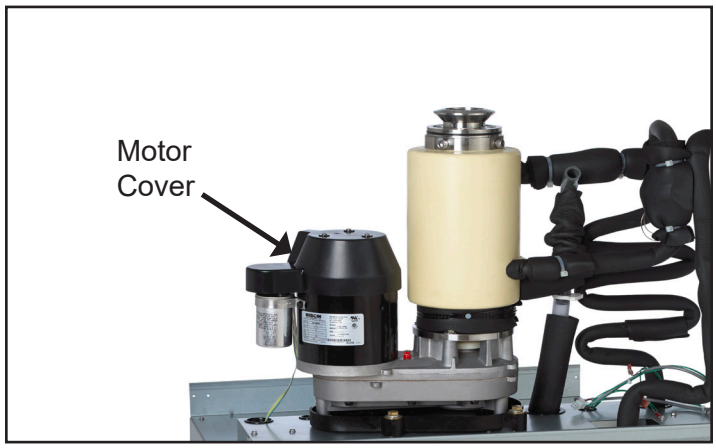

4. Remove 4 screws holding rotation sensor holder to motor.
5. Use a cordless impact driver to remove the screw holding the magnet rotor. If needed use the special thin wrench to hold motor shaft.

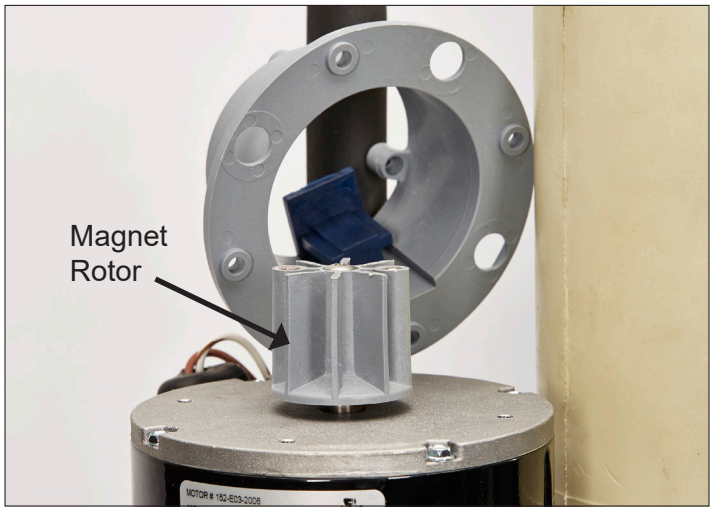

6. Remove four 1/2” hex head bolts securing evaporator assembly to gear reducer cover.

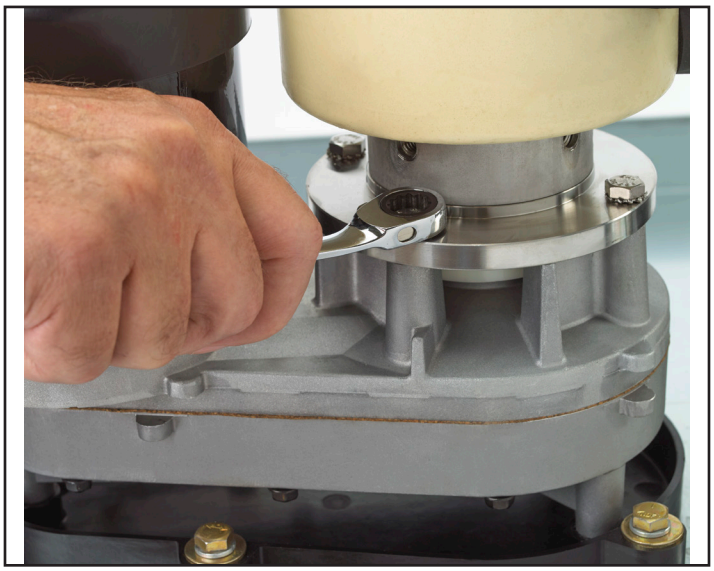

Remove Evaporator Bolts

7. Remove four 1/2” hex head bolts securing gear reducer condensate pan to chassis.
8. Separate gear reducer from evaporator and lift it from the machine.
9. Remove three 1/4 hex socket head screws securing pan to gear reducer.

Install new gear reducer. Be sure vent plug is open

Gear Reducer

The gear reducer is a sealed component. No gears or shaft bearings are available. A gear reducer without motor is available.

A properly operating gear reducer will operate quietly and draw a consistent amount of amps. It will not leak lubricant. Oil discharge is a strong indicator of water infiltration and is cause for replacement.

High amp draw could be caused by scale build up in the evaporator. Clean it first, then check amp draw. Confirm the top and lower bearings are not seized or rough.

A motor that rotates but the output shaft does not turn indicates a stripped gear and is cause for the gear reducer section to be replaced.

Auger

The auger must be clean and undamaged to work properly.

Remove it from the evaporator to confirm.

Note: A wet auger will appear clean - dry it to check for scale.

Damaged auger flight edges are not repairable and the auger must be then be replaced.

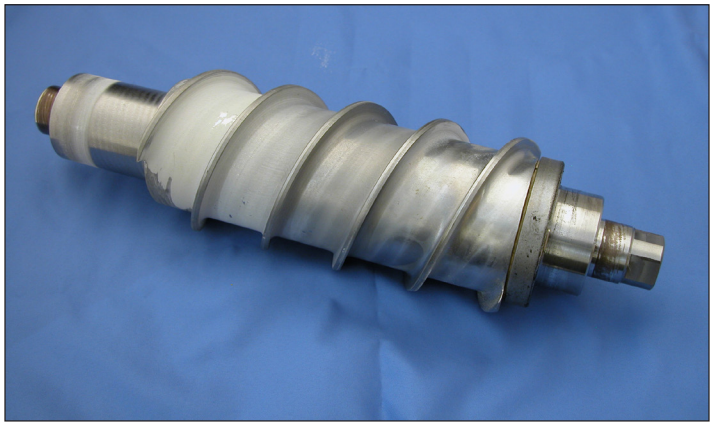



Auger Motor

The auger motor is a PSC motor with a capacitor. If the motor will not start, check first for voltage to the motor.

If there is full voltage to the motor, check the capacitor and motor windings, replace the motor if the winding is open. Replace the capacitor if it is damaged, open or weak.

Note: The replacement motor is supplied attached to a gear reducer cover. Remove the motor from the cover and attach it to the gear reducer.

A reversed motor code (1) is a strong symptom of a motor that should be replaced.

Removal

Suggested tools include a 1/4 inch drive ratchet set.

1. Disconnect electrical power.
2. Remove top panel.
3. Remove front panel.
4. Close float valve or shut water off to unit.

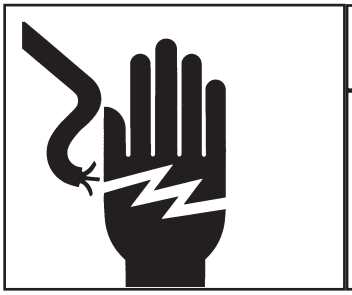

⚠WARNING

Electrical Shock Hazard

Disconnect electrical power before beginning

5. Drain reservoir and evaporator using the drain at the front of the machine.
6. Push back on chute cover, lift up and remove.
7. Remove ice sweep by rotating it counter clockwise.
8. Lift up and remove chute.
9. Remove the four socket head bolts at the side of the top of the evaporator.

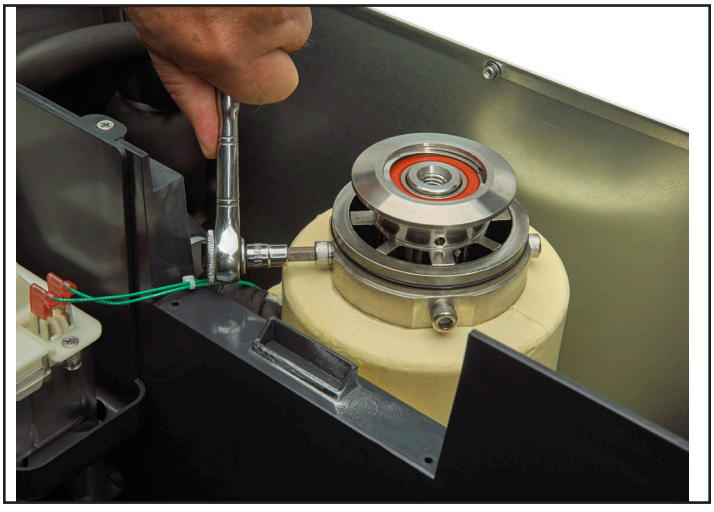

10. Return ice sweep and attach to auger.
11. Lift up on ice sweep to remove auger. and breaker together.

Replace Evaporator

1. Disconnect electrical power

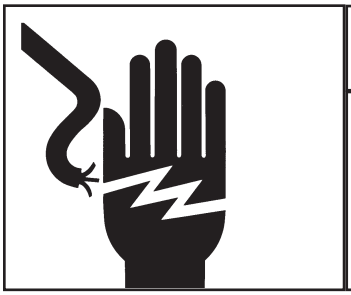

⚠WARNING

Electrical Shock Hazard

Disconnect electrical power before beginning

1. Go thru all steps to remove the auger.
2. Go thru all steps to remove the bin.
3. Recover the refrigerant charge.
4. Remove foam wrap from bottom of evaporator.



5. Remove the four 1/4 inch hex socket head screws at the bottom of the evaporator.



6. Un-braze the evaporator refrigerant inlet and outlet.
7. Lift the evaporator up and off the bottom bearing retainer. The stationary half of the water seal will be in the bottom of the tube. The rotating half is on the auger.

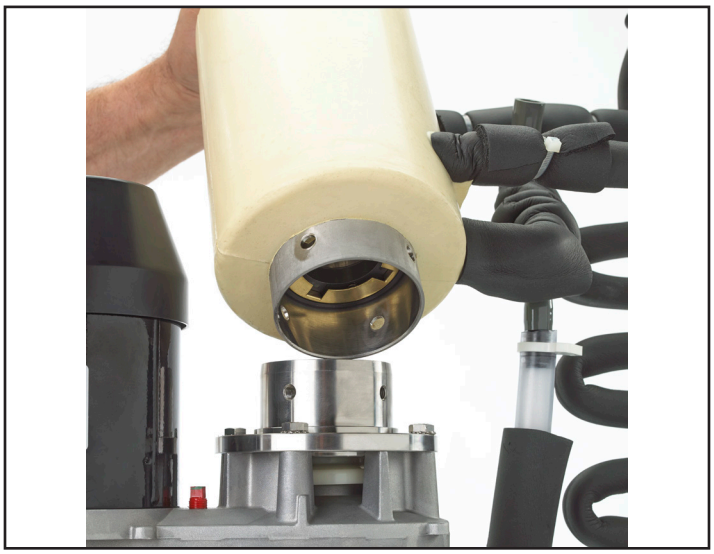

8. Confirm auger is un-damaged.
9. Install new water seal.
10. Replace bottom and top bearings.
11. Attach new evaporator to adapter.
12. Replace the dryer and evacuate the system to at least 300 microns.
13. Weigh in the nameplate charge.

Replace Auger Motor

Auger Motor

The auger motor may be replaced without removing the gear reducer. Due to manufacturing and testing reasons, the replacement auger drive motor is supplied mounted on a gear reducer cover. It is not necessary to replace the gear reducer cover.

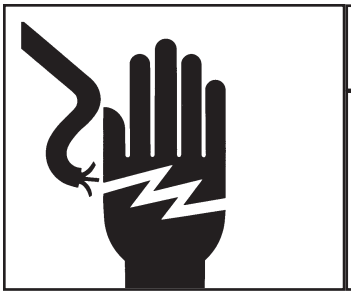

⚠WARNING

Electrical Shock Hazard

Disconnect electrical power before beginning

1. Remove 3 screws holding motor cover to motor.
2. Remove 4 screws holding rotation sensor to motor.
3. Use a cordless impact driver to remove the screw holding the magnet rotor. If needed use the special thin 3/8 open end wrench to hold the motor shaft.
4. Remove the original drive motor.
5. Separate the replacement drive motor from the shipping casting.
6. Install the rotor of the replacement motor into the gear reducer.
7. Attach the winding of the replacement motor to the gear reducer.
8. Attach the magnet rotor to the new motor shaft.
9. Attach the sensor and its holder to the motor.
10. Attach the motor cover to the motor. Reconnect wires.

Prep to Replace Water Seal or Bearings

It is the manufacturer's recommendation that the top bearing, bottom bearing and water seal be replaced at the same time.

Extruder / Breaker

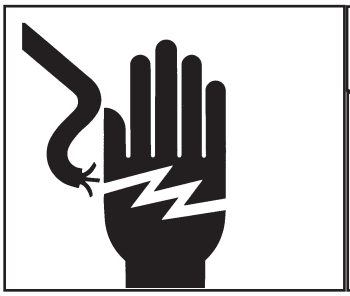

⚠WARNING

Electrical Shock Hazard

Disconnect electrical power before beginning

1. Remove top panel.
2. Slide chute cover back and remove.
3. Unscrew ice sweep.
4. Lift up and pull ice chute off evaporator.
5. Remove four 1/4 inch hex head socket screws.
6. Lift breaker off auger.



Auger

1. Shut water off to machine.
2. Drain reservoir.
3. Disconnect electrical power.
4. Remove top panel.
5. Unscrew ice sweep.
6. Lift up and pull ice chute off evaporator.
7. Remove four 1/4 inch hex socket head socket screws.

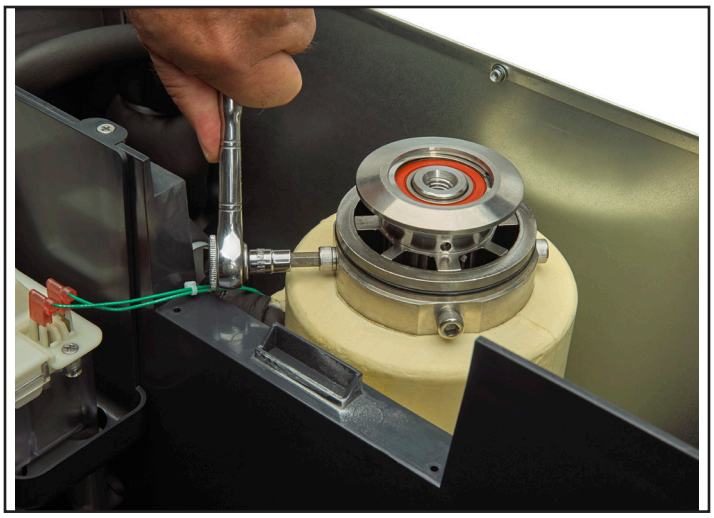

8. Return ice sweep to auger.
9. Lift on ice sweep to remove auger.

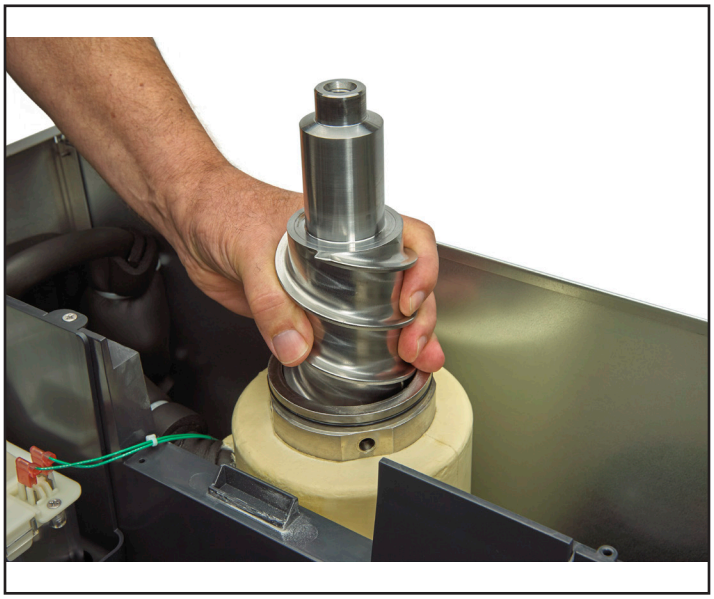

10. See *Replace Water Seal and Auger Bearings*

Replace Water Seal and Auger Bearings

Water Seal

1. Go thru all steps to remove the auger.
2. Remove the 4 allen head screws at the bottom of the evaporator.
3. Lift the evaporator up and off the bottom bearing retainer.
4. Push the water seal up on one side until it twists, grab it and pull it out.
5. Remove the rotating half from the bottom of the auger.
6. Clean the auger shoulder and add a very thin bead of food grade sealant to the bottom of the auger.



7. Carefully push the new rotating half of the water seal up against the sealant as far as possible. It should seat tightly and straightly against the auger shoulder. Do not put fingerprints on the sealing surface.
8. Wet the outside edge of the stationary half of the water seal and insert it into the bottom of the evaporator.
9. Slip the evaporator onto the bottom bearing retainer, the bearing retainer will push the water seal up into the correct position.

Note: The bottom bearing should have been replaced at this time.

10. Secure the evaporator to the bearing retainer with the original socket head screws. Be sure they are tight.

Top Bearing:

1. Go thru the process of removing the extruder breaker.
2. Remove the clip holding the bearing.

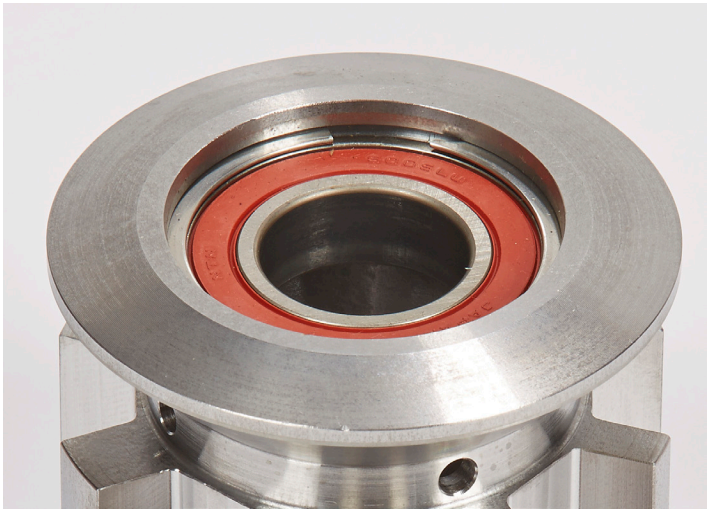

3. Tap out the old bearing.
4. Use the old bearing as something to tap on and drive the new bearing into the extruder.
5. Reinstall the clip.

Bottom Bearing:

1. Go thru the process of removing the auger.
2. Remove the 4 allen head screws at the bottom of the evaporator.
3. Remove the bolts holding the bearing retainer to the gear reducer.
4. Separate the gear reducer, evaporator and bearing retainer.
5. Remove the clip.
6. Tap out the old bearing.
7. Use the old bearing as something to tap on and drive the new bearing into the extruder.

General Access

1. Disconnect electrical power.



⚠WARNING

Electrical Shock Hazard

Disconnect electrical power before beginning

2. Remove front panel
3. Remove one screw holding control box to chassis (above and near the back of the control box).
4. Pull control box out until it stops.

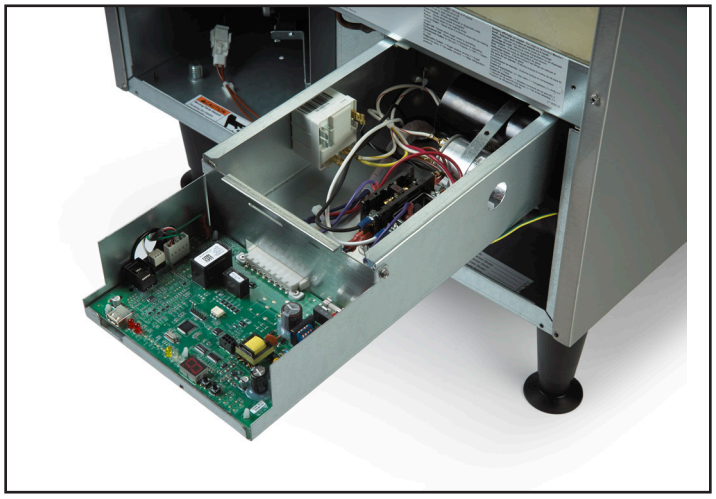

Note: If start capacitor needs testing or replacement, remove the thumb screw preventing the control box from being pulled further out.

Potential Relay.

1. Pull control box out.
2. Use long screwdriver from right side to remove screw holding relay to box.

Power Cord

1. Disconnect power
2. Remove front, top and right side panels.
3. Pull control box out all the way.
4. Remove power leads from contactor.
5. Pull cord from control box.
6. Loosen strain relief thru access hole in right side of chassis.
7. Pull cord thru back panel.

Note: It is critical that only a like OEM power cord be used as a replacement.

Controller

1. Disconnect electrical power.
2. Remove front panel.
3. Pull control box out.
4. Remove controller cover.
5. Disconnect all wires including the quick connect to the control box harness.
6. Compress stand offs and lift controller from control box.
7. Ground yourself to the metal chassis and then install the replacement controller.

Schematic Diagram

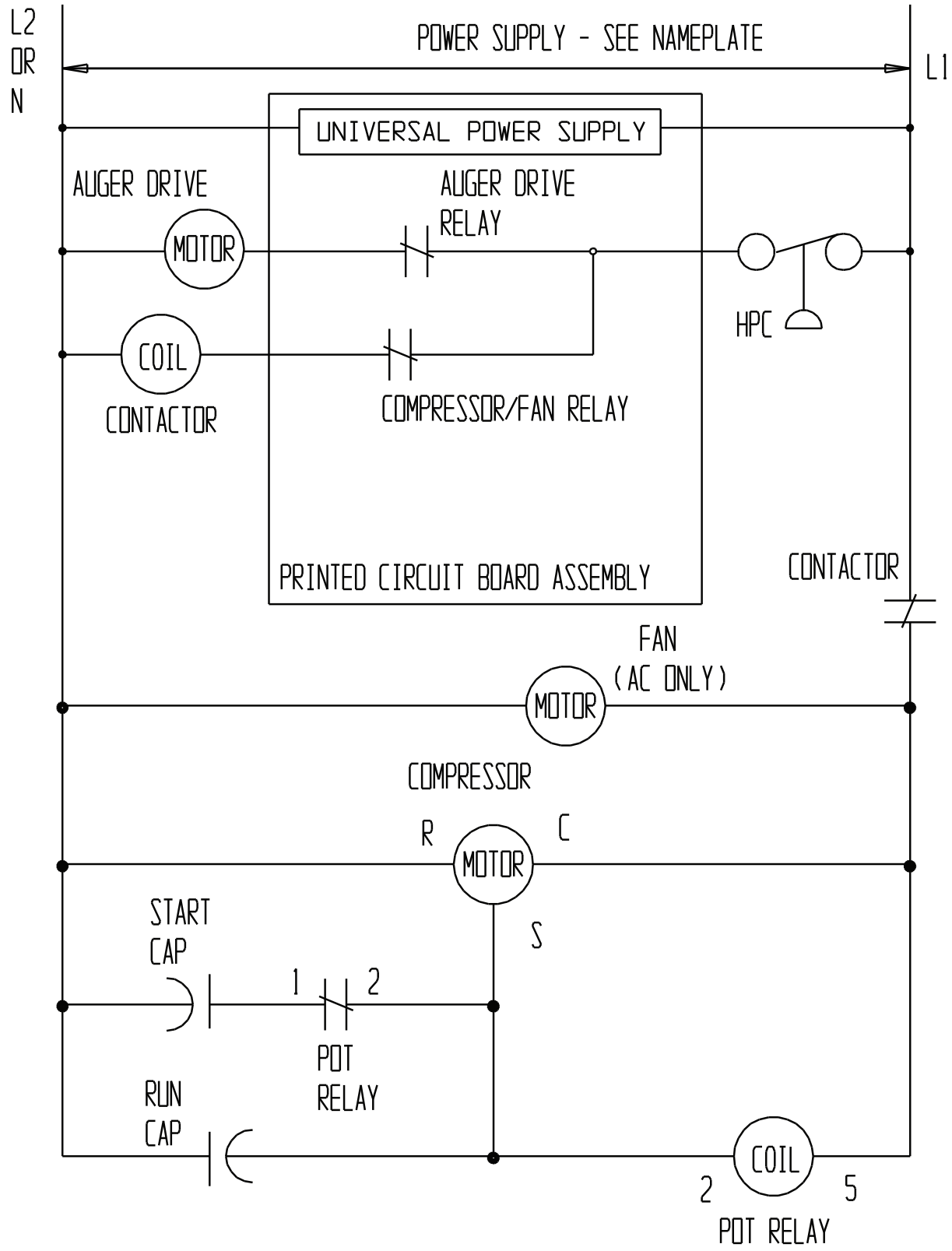

ALL CONTROLS SHOWN IN ICE MAKING MODE

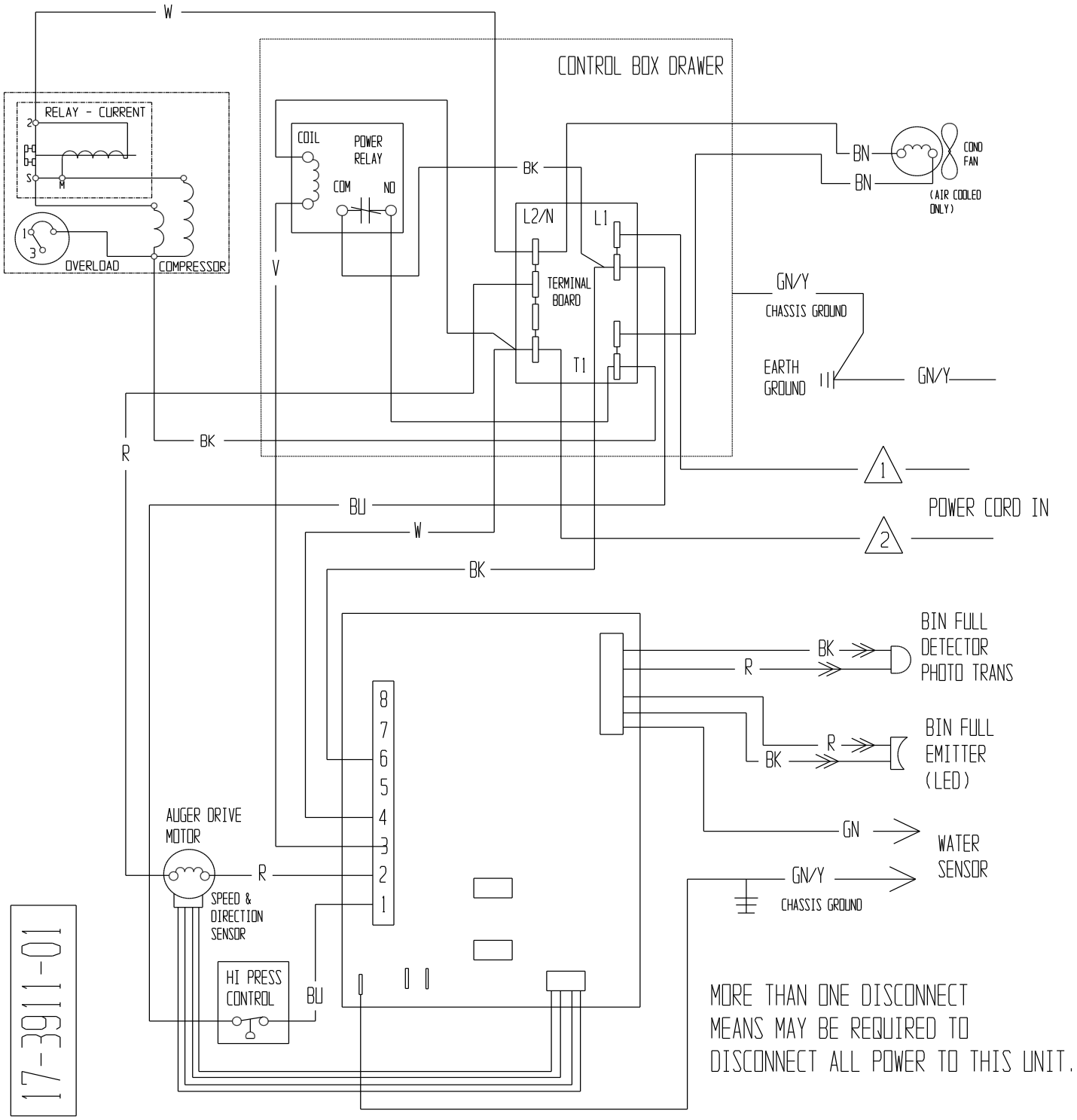
W
CONTROL BOX DRAWER
RELAY - CURRENT
2
P
D
S
M
1
3
OVERLOAD
COMPRESSOR
COIL
POWER
RELAY
COM
NO
V
BK
L2/N
L1
TERMINAL
BOARD
T1
BN
BN
COND
FAN
(AIR COOLED
ONLY)
GN/Y
CHASSIS GROUND
EARTH
GROUND
GN/Y
R
BK
1
POWER CORD IN
BU
W
2
BK
BIN FULL
DETECTOR
PHOTO TRANS
BK
R
R
BK
BIN FULL
EMITTER
(LED)
8
7
6
5
4
3
2
1
AUGER DRIVE
MOTOR
R
SPEED &
DIRECTION
SENSOR
GN
WATER
SENSOR
GN/Y
CHASSIS GROUND
HI PRESS
CONTROL
BU
MORE THAN ONE DISCONNECT
MEANS MAY BE REQUIRED TO
DISCONNECT ALL POWER TO THIS UNIT.
17-3911-01

Decommissioning

Only qualified technicians familiar with R290 refrigerant should decommission a machine, as special tools and containers are required for the removal, transportation, and disposal of this highly flammable substance.

Work shall be undertaken under a controlled procedure so as to minimise the risk of a flammable gas or vapour being present while the work is being performed.

- Before attempting the procedure:
    - All maintenance staff and others working in the local area shall be instructed on the nature of work being carried out. Work in confined spaces shall be avoided.
    - The area shall be checked with an appropriate refrigerant detector prior to and during work, to ensure the technician is aware of potentially toxic or flammable atmospheres. Ensure that the leak detection equipment being used is suitable for use with all applicable refrigerants, i.e., nonsparking, adequately sealed, or intrinsically safe.
    - If any hot work is to be conducted on the refrigerating equipment or any associated parts, appropriate fire extinguishing equipment shall be available on hand. A dry chemical or CO2 fire extinguisher should be adjacent to the charging area.
    - No person carrying out work in relation to a REFRIGERATING SYSTEM which involves exposing any pipe work shall use any sources of ignition in such a manner that it may lead to the risk of fire or explosion. All possible ignition sources, including cigarette smoking, should be kept sufficiently far away from the site of installation, repairing, removing and disposal, during which refrigerant can possibly be released to the surrounding space. Prior to work taking place, the area around the equipment shall be surveyed to make sure that there are no flammable hazards or ignition risks. “No Smoking” signs shall be displayed.
    - Ensure that all protective gear is present and used throughout the procedure.
    - Make sure recovery equipment and containers are available and ready for use. All containers used for recovery must be rated for R290 refrigerant and must be labeled as such.
    - Weigh any refrigerant prior to reclaiming.
- Maintain safety through standard operating procedures as outlined on page 20 of this document. Be sure to follow local, state, and federal guidelines for proper disposal.
- Do not fill containers more than 80% and do not exceed the pressure limits of the container. Make sure the machine to be decommissioned is in satisfactory working order and that the electrical components of the machine are properly sealed to prevent ignition.
- Recovered refrigerant should not be charged into another refrigerating system or mixed in another container.
- Make sure to safely transport the refrigerant in line with standard operating procedures.
- All recovered refrigerant must be returned to refrigerant supplier for proper disposal.
- If compressor or compressor oils are removed ensure it has been removed to an acceptable level so the flammable refrigerant does not remain in the lubricant.
- In addition to conventional charging procedures, the following requirements shall be followed:
    - Ensure that contamination of different refrigerants does not occur when using charging equipment. Hoses or lines shall be as short as possible to minimise the amount of refrigerant contained in them.
    - Cylinders shall be kept in an appropriate position according to the Instructions.

- Ensure that the REFRIGERATING SYSTEM is earthed prior to charging the system with refrigerant.
- Label the system when charging is complete (if not already).
- Extreme care shall be taken not to overfill the REFRIGERATING SYSTEM.

- Prior to recharging the system, it shall be pressure-tested with the appropriate purging gas. The system shall be leak-tested on completion of charging but prior to commissioning. A follow up leak test shall be carried out prior to leaving the site

- Before carrying out this decommissioning procedure, it is essential that the technician is completely familiar with the equipment and all its detail. It is recommended good practice that all refrigerants are recovered safely. Prior to the task being carried out, an oil and refrigerant sample shall be taken in case analysis is required prior to re-use of recovered refrigerant. It is essential that electrical power is available before the task is commenced.
  - Become familiar with the equipment and its operation.
  - Isolate the system electrically.
  - Before attempting the procedure, ensure that:
    - mechanical handling equipment is available, if required, for handling refrigerant cylinders;
    - all personal protective equipment is available and being used correctly;
    - the recovery process is supervised at all times by a competent person;
    - recovery equipment and cylinders conform to the appropriate standards.
  - Pump down refrigerant system, if possible.
  - If a vacuum is not possible, make a manifold so that refrigerant can be removed from various parts of the system.
  - Make sure that cylinder is situated on the scales before recovery takes place.
  - Start the recovery machine and operate in accordance with instructions.
  - Do not overfill cylinders (no more than 80 % volume liquid charge).
  - Do not exceed the maximum working pressure of the cylinder, even temporarily.
  - When the cylinders have been filled correctly and the process completed, make sure that the cylinders and the equipment are removed from site promptly and all isolation valves on the equipment are closed off.
  - Recovered refrigerant shall not be charged into another REFRIGERATING SYSTEM unless it has been cleaned and checked.

- Equipment shall be labelled stating that it has been de-commissioned and emptied of refrigerant. The label shall be dated and signed. For appliances containing FLAMMABLE REFRIGERANTS, ensure that there are labels on the equipment stating the equipment contains FLAMMABLE REFRIGERANT.

SCOTSMAN ICE SYSTEMS
101 Corporate Woods Parkway
Vernon Hills, IL 60061
800-726-8762
www.scotsman-ice.com