Gaggenau

en User manual

RB472304
RB492304
RY492304
RY492504

Fridge-freezer

en Table of contents

Safety instructions 4
About these instructions 4
Risk of explosion 4
Risk of electric shock 4
Risk of cold burns 4
Risk of injury 4
Fire hazard/Danger due to refrigerants 5
Fire hazard 5
Avoiding placing children and vulnerable people at risk 5
Damage 5
Weight 5

Intended use 6

Environmental protection 6
Packaging 6
Old appliances 6

Installation and connection 7
Scope of supply 7
Technical specifications 7
Installing the appliance 7
Built-in cut-out 7
Side-by-side installation 7
Tips for saving energy 8
Before using your appliance for the first time 9
Water connection 9
Electrical connection 9

Getting to know your appliance 10
2-door appliance 10
3-door appliance 11
Controls 12
Interior fittings 13

Operating the appliance 15
Switching on the appliance 15
Switching off and disconnecting the appliance 15
Setting the temperature 15
Fast cooling 15
Fast freezing 16
Display lock for cleaning 16
Holiday mode 16
Switching ice cube production on or off 16
Eco mode 17
Reset water filter counter 17
Self-test 17
Setting the brightness of the control panel 17
Setting up the display screen 17
Setting the touch field colour 17
Setting the touch field tone type 18
Setting the touch field tone volume 18
Setting the signal tone volume 18
Switching the water filter counter on and off 18
Dimming when door is opened and closed 18
Setting the temperature unit 18
Setting the language 19
Resetting to factory settings 19
Switching demo mode on or off 19
Rest mode 19
Automatic door opening 20
Switching on or switching off condensation protection 20
Home network 21
Automatic display lock for cleaning 21

Alarm 21
Door alarm 21
Temperature alarm 21

Home Connect 22
Setting up Home Connect 22
Connecting the refrigerator to the Home Connect app 23
Installing updates for the Home Connect software 23
Customer Service access 23
Delete network settings 23
Information on data protection 24
Declaration of conformity 24

Refrigerator compartment 25
Note when storing food 25
Note the chill zones in the refrigerator compartment 25
Vegetable container with humidity control 25
Chill comp. 25

Freezer compartment 26
Maximum freezing capacity 26
Fully utilising the freezer volume 26
Purchasing frozen food 26
Note when loading products 26
Freezing fresh food 27
Thawing frozen food 27

Cleaning 28
Cleaning the display 28
Cleaning the appliance interior 28
Cleaning the equipment 28
Care instructions for stainless steel surfaces 28

Odours 29
Exchanging the odour filter 29

Noises 30
Normal noises 30
Preventing noises 30

Lighting	**30**
Faults – what to do?	**31**
Appliance	31
Ice maker	32
Customer service	**33**
Appliance self-test	33
Repair order and advice on faults	33

⚠ Safety instructions

This appliance complies with the relevant safety regulations for electrical appliances and is fitted with noise suppression.

The refrigeration circuit has been checked for leaks.

About these instructions

- Read and follow the operating and installation instructions. They contain important information on how to install, use and maintain the appliance.
- The manufacturer is not liable if you disregard the instructions and warnings in the operating and installation instructions.
- Retain all documents for subsequent use or for the next owner.

Risk of explosion

- Never use electric appliances inside the appliance (e.g. heaters or electric ice makers).
- Do not store products which contain flammable propellant (e.g. spray cans) or explosive substances in the appliance.
- Store high-percentage alcohol tightly sealed and in an upright position.
- Do not use additional means to accelerate the defrosting process other than those recommended by the manufacturer.

Risk of electric shock

Improper installations and repairs may put the user at considerable risk.

- When installing the appliance, ensure that the mains cable is not trapped or damaged.
- If the mains cable is damaged: immediately disconnect the appliance from the electricity supply.
- Do not use multiple sockets, extension leads or adapters.
- Have the appliance repaired by the manufacturer, Customer Service or a similarly qualified person only.
- Use original parts supplied by the manufacturer only.

  The manufacturer guarantees that these parts satisfy the safety requirements.

Risk of cold burns

- Never put frozen food straight from the freezer compartment into your mouth.
- Avoid prolonged contact of skin with frozen food, ice and the tubes in the freezer compartment.

Risk of injury

Containers which contain carbonated drinks may burst.
Do not store containers which contain carbonated drinks in the freezer compartment.



Fire hazard/Danger due to refrigerants

The tubes of the refrigeration circuit convey a small quantity of an environmentally friendly but flammable refrigerant (R600a). It does not damage the ozone layer and does not contribute to the greenhouse effect. If refrigerant escapes, it may injure your eyes or ignite.

- Do not damage the tubes.

If the tubes are damaged:

- Keep naked flames and ignition sources away from the appliance.
- Ventilate the room.
- Switch off the appliance and pull out the mains plug.
- Please contact Customer Service.



Fire hazard

Portable multiple outlets or power supplies may overheat, causing a fire.
Never leave portable multiple outlets or portable power supplies behind the appliance.

Avoiding placing children and vulnerable people at risk

At risk are:

- Children,
- People who have limited physical, mental or sensory abilities,
- People who have inadequate knowledge concerning safe operation of the appliance.

Measures:

- Ensure that children and vulnerable people have understood the hazards.
- Children or vulnerable people must be supervised by a responsible person when using the appliance.
- Only children from 8 years and above may use the appliance.
- Supervise children while the appliance is being cleaned or maintained.
- Never allow children to play with the appliance.

Risk of suffocation

- If the appliance features a lock: keep the key out of the reach of children.
- Keep children away from the packaging and its parts.

Damage

To prevent damage:

- Do not stand or support yourself on the base, runners or doors.
- Keep plastic parts and door seals free of oil and grease.
- Pull the mains plug – not the power cord.

Weight

The appliance is very heavy. The appliance should always be transported and set up by at least 2 persons.

→ *"Installing the appliance" on page 7*

Intended use

Use this appliance

- only for the cooling and freezing of food and for making ice.
- only in the home and in the home environment.
- only according to these operating instructions.

This appliance is intended for use up to a maximum height of 2000 metres above sea level.

Environmental protection

Packaging

All materials are environmentally safe and recyclable:

- Dispose of packaging in an environmentally friendly manner.
- Please ask your dealer or inquire at your local authority about current means of disposal.

Old appliances

Valuable raw materials can be reclaimed by recycling old appliances.

⚠ Warning – Children may become locked in the appliance and suffocate!

- To prevent children from climbing in, leave shelves and containers in the appliance.
- Keep children away from the redundant appliance.

Caution!
Refrigerant and harmful gases may escape.

Do not damage the tubes of the refrigerant circuit and insulation.

1 Remove the mains plug.

2 Sever the power cord.

3 Have the appliance disposed of professionally.



This appliance is labelled in accordance with European Directive 2012/19/EU concerning used electrical and electronic appliances (waste electrical and electronic equipment - WEEE). The guideline determines the framework for the return and recycling of used appliances as applicable throughout the EU.

Installation and connection

Scope of supply

After unpacking all parts, check for any damage in transit.

If you have any complaints, contact the dealer from whom you purchased the appliance or our customer service.
⟶ *"Customer service" on page 33*

The delivery consists of the following parts:

- Built-in appliance
- Interior fittings (depending on model)
- Installation material
- User manual
- Installation instructions
- Customer service booklet
- Warranty enclosure
- Information on the energy consumption and noises

Technical specifications

Refrigerant, cubic capacity and further technical specifications can be found on the rating plate.
⟶ *"Getting to know your appliance" on page 10*

Installing the appliance

Installation location

The more refrigerant an appliance contains, the larger the room must be in which the appliance is situated. Leaking refrigerant can form a flammable gas-air mixture in rooms which are too small.

The room must be at least 1 m³ per 8 g of refrigerant. The amount of refrigerant in your appliance is indicated on the rating plate inside the appliance.
⟶ *"Getting to know your appliance" on page 10*

The weight of the appliance may be up to 460 kg depending on the model. The base must be sufficiently stable and should not give. If necessary, reinforce the floor.

Permitted room temperature

The permitted room temperature depends on the climatic class of the appliance.

Information on the climatic class can be found on the rating plate.
⟶ *"Getting to know your appliance" on page 10*

Climatic category	Permitted room temperature
SN	+10 °C ... 32 °C
N	+16 °C ... 32 °C
ST	+16 °C ... 38 °C
T	+16 °C ... 43 °C

The appliance is fully functional within the permitted room temperature.

If an appliance of climatic class SN is operated at colder room temperatures, the appliance will not be damaged up to a room temperature of +5 °C.

Built-in cut-out

The cut-out must fulfil these criteria:

- Anti-tilt bracket fitted
- Cut-out depth min. 610 mm, for flush installation 635 mm
- Rectangular
- Stable – the side panels and the top must be min. 16 mm thick and securely attached to the bottom or wall
- Depth of shortened side panels min. 100 mm

Side-by-side installation

Observe the specifications in the installation instructions for a side-by-side installation.

If a partition wall is required between the appliances, it must be at least 16 mm wide.

Tips for saving energy

If you follow the instructions below, your appliance will use less power.

Note: The arrangement of the features does not affect the energy consumption of the appliance.

Installing the appliance	
Keep the appliance out of direct sunlight.	The appliance needs to cool less frequently at low ambient temperatures and therefore consumes less power.
Install the appliance as far away as possible from heating elements, cooker and other heat sources: At least 1¼" (3 cm) from electric or gas cookers. At least 11¾" (30 cm) from oil or solid-fuel cookers. **Note:** If this is not possible, attach an insulating plate between the appliance and heat source.	
Select an installation location with a room temperature of approx. 20 °C.	
Do not cover or block the ventilation openings.	If the warm air can escape, the appliance needs to cool less frequently and therefore consumes less power.
Ventilate the room daily.	

Using the appliance	
Open the appliance door only briefly.	The air in the appliance does not warm up so intensely. The appliance needs to cool less frequently and therefore consumes less power.
Transport purchased food in a cool bag and place in the appliance quickly.	
Allow warm food and drink to cool down before placing in the appliance.	
Thaw frozen food in the refrigerator compartment to utilise the low temperature of the frozen food.	
Always leave a space between the food and the back wall.	The air can circulate and the humidity will remain constant.The appliance needs to cool less frequently and therefore consumes less power.
Pack food airtight.	
Do not cover or block the ventilation openings.	The appliance consumes less power if warm air can escape.
Vacuum the ventilation openings once a year.	

Before using your appliance for the first time

1 Remove information material, adhesive tape and protective film.

2 Clean the appliance.
⟶ *"Cleaning" on page 28*

Water connection

Caution!

– Installation and connection of the appliance must be carried out by qualified technicians according to the installation instructions supplied.

– To avoid damage to the appliance and to ensure its proper functioning, it should only be connected to a drinking water system.

– To avoid water damage, a shut-off valve must be installed.

Water pressure of drinking water system

Caution!

To avoid damage to the appliance, a pressure relief valve must be installed between the drinking water connection and the tubing, should the water pressure exceed the maximum value.

Note: If the water pressure is too low, this will impair the relevant functions of the appliance.

- Min. 0.2 Mpa (2 bar / 29 psi)
- Max. 0.8 Mpa (8 bar / 116 psi)

Electrical connection

Caution!

Do not connect the appliance to electronic energy saver plugs.

Note: You can connect the appliance to mains-controlled and sine-controlled inverters.
Mains-controlled inverters are used for photovoltaic systems which are connected directly to the national grid. Sine-controlled inverters must be used for isolated applications. Isolated applications, e.g. on ships or in mountain lodges, which are not connected directly to the national grid.

1 After installing the appliance, wait at least 1 hour before connecting it to prevent damaging the compressor.

2 Connect the appliance via a correctly installed socket.
The socket must comply with the following data:

Socket with	220 V ... 240 V
Conductor	50 Hz
Fuse	10 A ... 16 A

Outside Europe: Check whether the indicated current type of the appliance corresponds with the values of your power supply. Appliance specifications are on the rating plate.
⟶ *"Getting to know your appliance" on page 10*

3 Connect the appliance to a socket near the appliance.
The socket must also be freely accessible following installation of the appliance.

⚠ **Warning – Risk of electric shock!**
If the length of the mains cable is inadequate, never use multiple sockets or extension leads.Instead, please contact Customer Service for alternatives.

Getting to know your appliance

2-door appliance

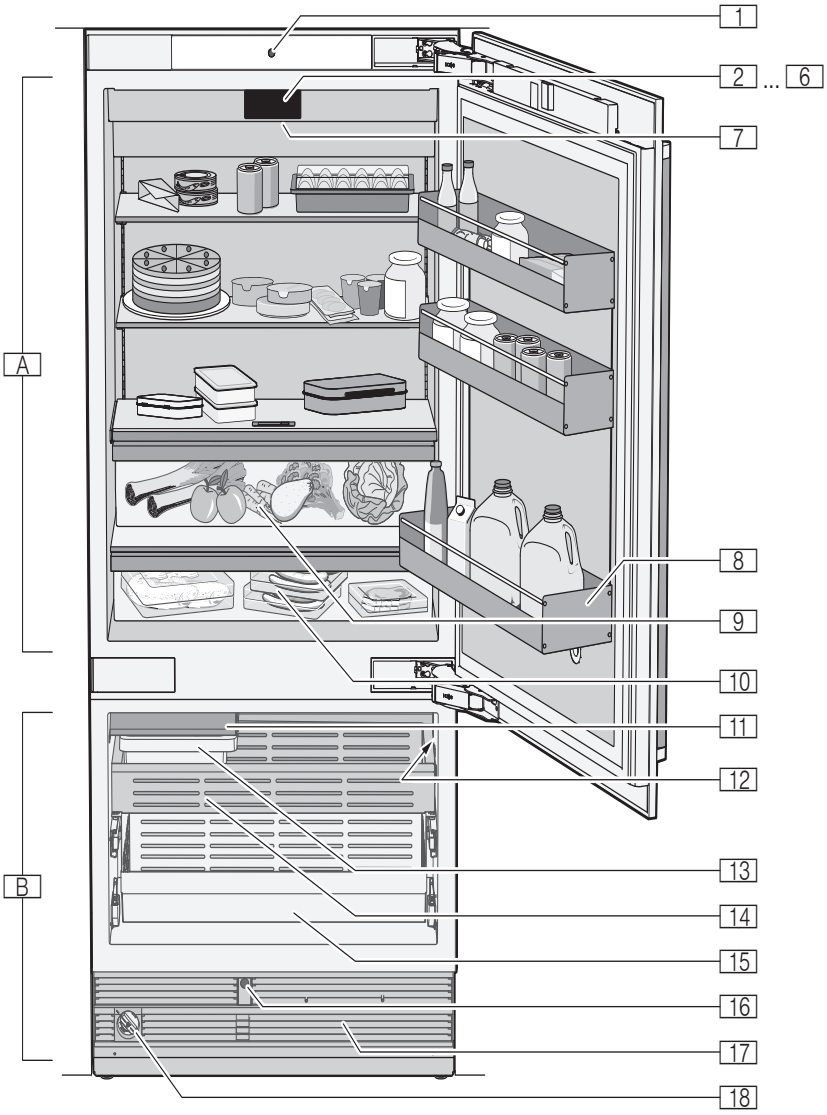

A	Refrigerator compartment
B	Freezer compartment
1	Automatic door opening refrigerator compartment
2 ... 6	Controls
7	Main switch on/off
8	Tray for large bottles
9	Vegetable container with humidity control
10	Chiller compartment
11	Ice maker
12	Rating plate
13	Ice cube container
14	Frozen food container
15	Frozen food container (large)
16	Automatic door opening freezer compartment
17	Ventilation opening
18	Water filter

3-door appliance

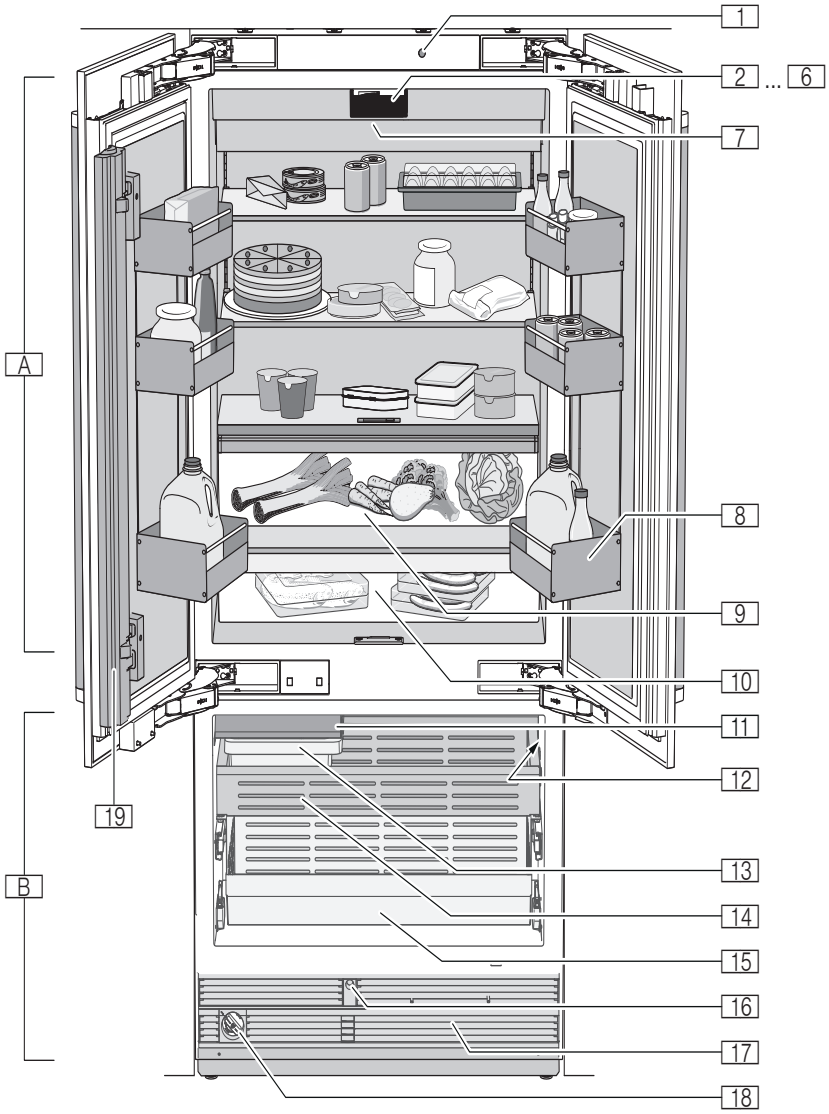

A	Refrigerator compartment
B	Freezer compartment
1	Automatic door opening
2 ... 6	Controls
7	Main switch on/off
8	Tray for large bottles
9	Vegetable container with humidity control
10	Chiller compartment
11	Ice maker
12	Rating plate
13	Ice cube container
14	Frozen food container
15	Frozen food container (large)
16	Automatic door opening freezer compartment
17	Ventilation opening
18	Water filter
19	Door pillar with condensation protection

Controls

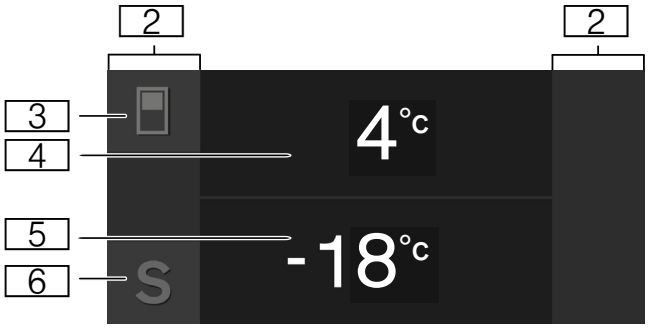

2 Touch fields
There are sensors under the touch fields. Touching the symbol calls up the respective function.

3 button
Opens the menu for changing the temperature.

4 Refrigerator compartment temperature display
Indicates the set temperature in °C/°F.

5 Freezer compartment temperature display
Indicates the set temperature in °C/°F.

6 **S** button
Opens main menu.

Main menu

Press **S** button to open the main menu.

In the main menu you can find:

- Basic settings
- Display lock for cleaning
- Holiday mode
- Ice cube production
- Eco mode
- Reset water filter counter
- Self-test
- Rest mode (when active)

→ *"Operating the appliance" on page 15*

Basic settings menu

To access the **Basic settings** menu:

1 Press the **S** button.
2 Press ❮ button to move to the menu item **Basic settings**.
3 Open menu using ✔ button.

In the **Basic settings** menu you will find the following sub-menus and setting options:

- Brightness
- Display screen
- Touch field colour
- Touch field tone type
- Touch field tone volume
- Signal tone volume
- Water filter counter
- Dimming when door is opened and closed
- Temperature unit
- Language
- Factory settings
- Demo mode
- Rest mode
- Automatic door opening refrigerator compartment
- Automatic door opening freezer compartment
- Condensation protection (only on 3-door appliance)
- Home network
- Automatic display lock for cleaning

→ *"Operating the appliance" on page 15*

Interior fittings

(not all models)

Storage compartment

You can remove and adjust the height of the storage compartment:

- Lift up storage compartment and remove.

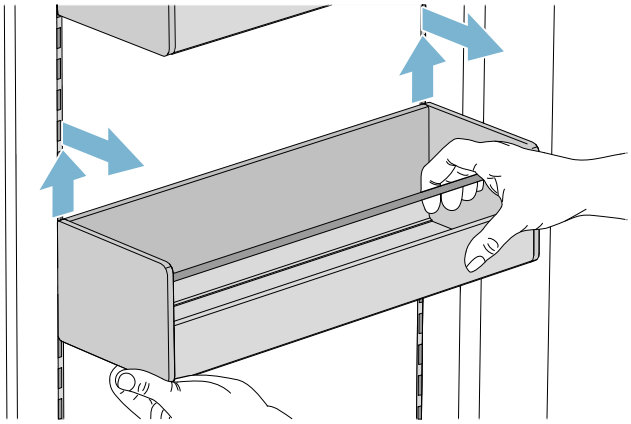

- Clean the storage compartment if necessary and carefully put it back in the same or a new position.

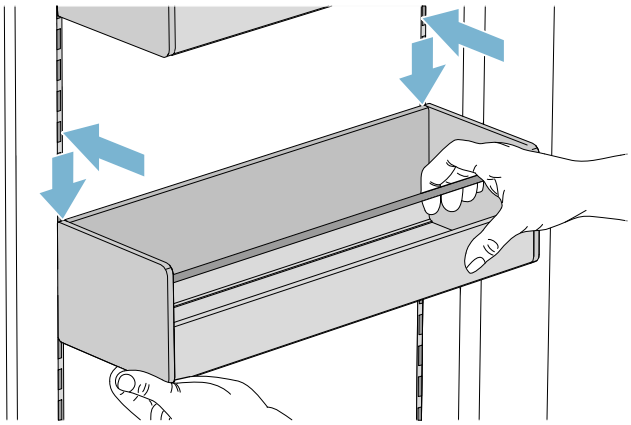

Shelf

You can remove and adjust the shelf:

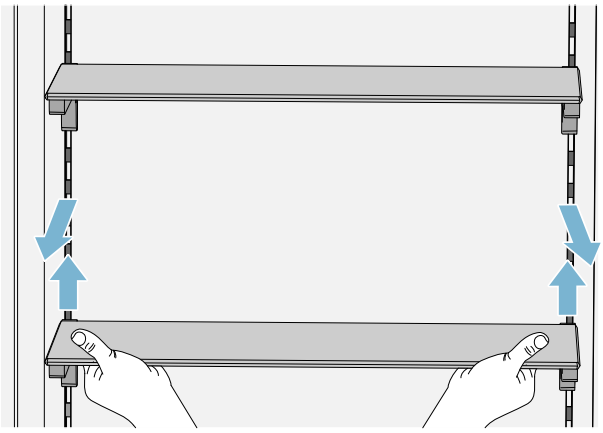

1 Lift shelf and remove.

2 When re-inserting, insert hooks on back of shelf at same height to make it level.

Note:

Insert shelf carefully to avoid scratches to appliance.

Container

You can remove the container:

- Press container to the rear,
- Lift the container at the rear and remove.

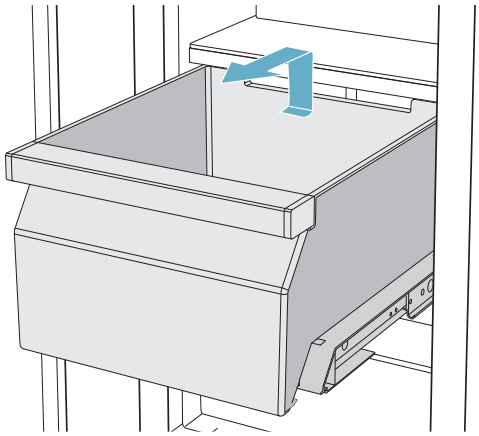

You can insert the container:

- Pull out telescopic rails all the way
- Place the container on the telescopic rails and push into the appliance until it engages.

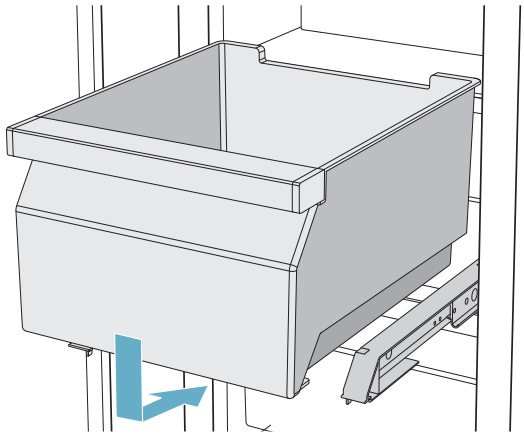

Ice maker

Caution!
Damage to the appliance!

Never store bottles or food in the ice cube container, even for short periods. This can block and damage the ice maker.

Ice cube production starts as soon as the appliance has reached the set temperature.

Notes

– Discard the first 30-40 ice cubes for hygiene reasons.

– Ice cube production stops automatically when the ice cube container is full.

Information about switching ice cube production on and off
⟶ *"Switching ice cube production on or off" on page 16*

Ice pack

In the event of a power failure or a fault:

- The ice pack delays the warming of the stored frozen food.

Note:

The longest storage time is obtained by placing the ice pack on the food in the top compartment.

You can take out the ice pack for temporarily keeping food cool, e.g. in a cool bag.

Particle filter

The particle filter supplied will only filter particles out of drinking water, not bacteria or microbes.

The particle filter can remain in the appliance permanently: it does not need to be changed.

Note:

You can also use the appliance with a water filter. If you have replaced the particle filter with a water filter, you must switch the water filter counter on.
⟶ *"Switching the water filter counter on and off" on page 18*
The water filter must be changed regularly. To do so, note the information on the water filter.

A new particle filter or water filter can be obtained from customer service or a specialist dealer.

Cleaning particle filter

The particle filter can remain in the appliance permanently: it does not need to be changed. We recommend cleaning it once a year.

This is how to clean the particle filter:

1 Turn the cap of the particle filter anticlockwise.
2 Pull out the particle filter.
3 Remove the inner filter at the rear of the particle filter.
4 Clean the filter under running water.
5 Replace the inner filter at the rear of the particle filter.
6 Slide the particle filter to the stop in the filter opening.
   Note:
   The holder on the cap must be horizontal here.
7 Turn the particle filter clockwise to the stop.
8 When using a water filter: Reset water filter counter.
   ⟶ *"Reset water filter counter" on page 17*
   Note:
   When a particle filter is used, the water filter counter is not required and therefore remains switched off.

Changing the particle filter or replacing with a water filter

The particle filter can remain in the appliance permanently: it does not need to be changed. You can however change the particle filter if required or replace it with a water filter.

Note:

After installing a particle or water filter, discard all ice cubes produced over the first 24 hours.

1 Turn the cap of the particle filter anticlockwise.
2 Pull out the particle filter.
3 Remove the protective cap from the new filter.
4 Take off the cap of the old particle filter and put it on the new particle or water filter.
5 Slide the new particle or water filter to the stop in the filter opening.
   Note:
   The cap must be horizontal here.
6 Turn the particle or water filter clockwise to the marking.
   Note:
   If the particle or water filter is not turned far enough, damage will be caused by water leaking out.

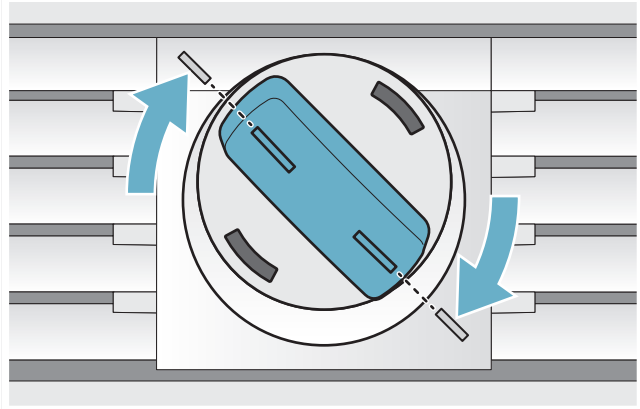

7 When using a water filter: Switch the water filter counter on.
   ⟶ *"Reset water filter counter" on page 17*
   Note:
   When a particle filter is used, the water filter counter is not required and therefore remains switched off.
8 Discard the ice cubes produced over the first 24 hours.
9 Drain the water out of the old particle filter.
   Note:
   You can dispose of the old particle filter with your household waste.

Operating the appliance

Switching on the appliance

1 Press the **main On/Off switch**.
The appliance starts cooling and the light is switched on when the door is open.

2 Set the required temperature.
⟶ *"Setting the temperature" on page 15*

Operating tips

- After the appliance has been switched on, it may take several hours until the set temperatures have been reached. Do not put in any food until the selected temperature has been reached.
- The fully automatic NoFrost system ensures that the freezer compartment remains free of ice.

  Defrosting is not required.
- The sides of the housing are partly heated slightly. This prevents condensation in the area of the door seal.
- If the freezer compartment door cannot be immediately re-opened after it has been closed, wait until the resulting low pressure has equalised.

Switching off and disconnecting the appliance

Switch off the appliance

- Press the **main On/Off switch**.

  The appliance no longer cools.

Disconnecting the appliance

Caution!

Deterioration in water quality

The water supply must be turned off 3 hours before disconnecting. This prevents mould forming with any unused water.

If you do not use the appliance for a prolonged period:

1 Turn off the water supply to the appliance and wait 3 hours.

2 Remove groceries.

3 Press the **main On/Off switch**.

4 Pull out the mains plug or switch off the fuse.
The appliance no longer cools.

5 Empty the ice cube container and clean the appliance.
⟶ *"Cleaning" on page 28*

6 Leave the appliance open.

Setting the temperature

Recommended temperature

Refrigerator compartment:	+4 °C
Freezer compartment:	–18 °C

Setting the refrigerator and freezer compartment temperature

1 Use ▪ button to select the desired compartment.

2 Keep pressing **–**/**+** button until the display indicates the desired temperature.

3 The appliance stores the setting and automatically returns to the main screen after a few seconds.

Fast cooling

Fast cooling cools the refrigerator compartment as cold as possible.

Switch on fast cooling e.g.:

- before placing large quantities of food in the compartment
- for cooling drinks quickly

Note: When fast cooling is switched on, increased operating noises may occur.

After 6 hours the appliance switches to normal operation.

Switching on fast cooling:

1 To open the menu for setting the temperature, press ▪ button.

2 Press ✳ button.
When fast cooling is switched on, the symbol ✳ appears on the display.

3 The appliance stores the setting and automatically returns to the main screen after a few seconds.

Switching off fast cooling:

1 To open the menu for setting the temperature, press ▪ button.

2 Press ✳ button.
When fast cooling is switched off, the symbol ✳ disappears from the display.

3 The appliance stores the setting and automatically returns to the main screen after a few seconds.

Fast freezing

Fast freezing cools the freezer compartment as cold as possible.

Switch on fast freezing e.g.:

- to freeze food solid as quickly as possible
- 4 ... 6 hours before freezing food weighing 2 kg or more
- to use the max. freezing capacity

Note: When fast freezing is switched on, increased operating noise may occur.

After approx. 2 ½ days the appliance switches to normal operation.

Switching on fast freezing:

1 To open the menu for setting the temperature, press button and select the freezer compartment with button.
2 Press button.
When fast freezing is switched on, the symbol appears on the display.
3 The appliance stores the setting and automatically returns to the main screen after a few seconds.

Switching off fast freezing:

1 To open the menu for setting the temperature, press button and select the freezer compartment with button.
2 Press button.
When fast freezing is switched off, the symbol disappears from the display.
3 The appliance stores the setting and automatically returns to the main screen after a few seconds.

Display lock for cleaning

You can use this function to switch off the touch function of the controls for 10 seconds. During this time you can clean the display.
→ *"Cleaning the display" on page 28*

1 Press **S** button to open the main menu.
2 Press ▸ button.

The cleaning display appears and the countdown starts.

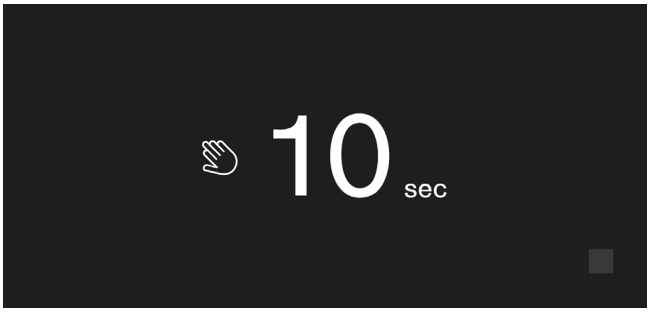

Holiday mode

If leaving the appliance for a long period of time, you can switch it over to the energy-saving holiday mode.

Note: The refrigerator compartment temperature is switched to +14 °C. Do not store any food in the refrigerator compartment during this time.

The appliance automatically sets the following temperatures:

- Refrigerator compartment: +14 °C
- Freezer compartment: unchanged

Ice cube production is deactivated.

Switching Holiday mode on or off

Switching on:

1 Press **S** button to open the main menu.
2 Use ❯ button to move to the menu item **Holiday mode**.
3 Press the ▸ button.
4 Press the ✓ button.
5 Confirm the following prompt with ✓ button and remove all perishable food from the refrigerator compartment.

The temperature is changed and the display shows the new temperature.

Switching off:

To switch off holiday mode, press ■ button on the home screen.

Switching ice cube production on or off

Caution!

Damage to the appliance.

Never store bottles or food in the ice cube container, even for short periods. This can block and damage the ice maker.

Ice cube production starts as soon as the appliance has reached the set temperature.

Note: Ice cube production stops automatically when the ice cube container is full.

Switching ice maker on or off

1 Press **S** button to open the main menu.
2 Use ❯ button to move to the menu item **Ice cube production**.
3 Press ▸/■ button.

Eco mode

Eco mode switches the appliance to energy-saving operation.

The appliance automatically sets the following temperatures:

- Refrigerator compartment: +6 °C
- Freezer compartment: –16 /3

Switching Eco mode on or off

1 Press **S** button to open the main menu.
2 Press ❯ button to move to the menu item **Eco mode**.
3 Press ▶/■ button.

The temperature is changed and the display shows the new temperature. When Eco mode is switched off, the recommended temperature is set.

Note: You can also switch Eco mode on or off by adjusting the temperature with the **–**/**+** buttons.

Reset water filter counter

If you are using a water filter in your appliance instead of the particle filter supplied, you have to reset the water filter counter whenever you have replaced the water filter.
⟶ *"Switching the water filter counter on and off" on page 18*

1 Press **S** button to open the main menu.
2 Use ❯ button to move to the menu item **Reset water filter counter**.
3 Press ✓ button to confirm and confirm the query again with ✓ button.

Note: If you cancel the query or take longer than 10 seconds to make an input, the water filter counter will not be reset.

Self-test

This function can be used to start fault analysis on your appliance.
⟶ *"Appliance self-test" on page 33*

Setting the brightness of the control panel

1 Press **S** button to open the main menu.
2 Press ❮ button to move to the menu item **Basic settings**.
3 Press ✓ button.
4 Press _ button to open the menu item **Brightness**.
5 Press ❮ ❯ buttons to set the required brightness.
6 Press ✓ button.
The setting is saved.
7 Press ✕ button to exit the menu.

Setting up the display screen

You can choose between the settings **Reduced** and **Standard**. With the setting **Reduced** only the temperature and active special functions are displayed on the control panel after a short period without operation. If the touch fields are touched, all buttons will be visible again.
With the setting **Standard** all buttons always remain visible.

1 Press **S** button to open the main menu.
2 Press ❮ button to move to the menu item **Basic settings**.
3 Press ✓ button.
4 Use ❯ button to move to the menu item **Display screen**.
5 Press _ button.
6 Press ❮ ❯ buttons to move to the required setting.
7 Press ✓ button.
The setting is saved.
8 Press ✕ button to exit the menu.

Setting the touch field colour

1 Press **S** button to open the main menu.
2 Press ❮ button to move to the menu item **Basic settings**.
3 Press ✓ button.
4 Press ❯ button to move to the menu item **Touch field colour**.
5 Press _ button.
6 Press ❮ ❯ buttons to move to the required setting.
7 Press ✓ button.
The setting is saved.
8 Press ✕ button to exit the menu.

Setting the touch field tone type

You can change or switch off the sound of the tones generated when pressing buttons.

1 Press **S** button to open the main menu.
2 Press ❮ button to move to the menu item **Basic settings**.
3 Press ✔ button to open the menu item.
4 Press ❯ button to move to the menu item **Touch field tone type**.
5 Press _ button to open the menu item.
6 Press ❮ ❯ buttons to select the required setting.
7 Press ✔ button.
The setting is saved.
8 Press **X** button to exit the menu.

Setting the touch field tone volume

You can adjust the volume level of the sounds generated when pressing buttons.

1 Press **S** button to open the main menu.
2 Press ❮ button to move to the menu item **Basic settings**.
3 Press ✔ button to open the menu item.
4 Press ❯ button to move to the menu item **Touch field tone volume**.
5 Press _ button to open the menu item.
6 Press ❮ ❯ buttons to select the required setting.
7 Press ✔ button.
The setting is saved.
8 Press **X** button to exit the menu.

Setting the signal tone volume

You can adjust the volume level of the signal tones generated e.g. with alarms.

1 Press **S** button to open the main menu.
2 Press ❮ button to move to the menu item **Basic settings**.
3 Press ✔ button to open the menu item.
4 Press ❯ button to move to the menu item **Signal tone volume**.
5 Press _ button to open the menu item.
6 Press ❮ ❯ buttons to select the required setting.
7 Press ✔ button.
The setting is saved.
8 Press **X** button to exit the menu.

Switching the water filter counter on and off

If you have replaced the particle filter with a water filter, switch the water filter counter on. This will remind you to replace the water filter in good time.

1 Press **S** button to open the main menu.
2 Use ❮ button to move to the **Basic settings** menu.
3 Press ✔ button.
4 Use ❯ button to move to the menu item **Water filter counter**.
5 To change the setting, press _ button.
6 Select the required setting.
7 Confirm the selection by pressing ✔ button.

Dimming when door is opened and closed

If dimming is switched on, the light will slowly become brighter when the door is opened, and then slowly darker when it is closed.

Switching dimming on or off when opening and closing the door

1 Press **S** button to open the main menu.
2 Press ❮ button to move to the menu item **Basic settings**.
3 Press ✔ button.
4 Press ❯ button to move to the menu item **Dimming when opening and closing the door**.
5 Press _ button.
6 Press ❯ button to move to the menu item **On** or **Off**.Press ✔ button to confirm.

Setting the temperature unit

You can choose between the unit °C and °F.

1 Press **S** button to open the main menu.
2 Press ❮ button to move to the menu item **Basic settings**.
3 Press ✔ button.
4 Press ❮ button to move to the menu item **Temperature unit**.
5 Press _ button.
6 Press ❮ ❯ buttons to move to the required unit.
7 Press ✔ button.
The unit will be changed.
8 Press **X** button to exit the menu.

Setting the language

1 Press **S** button to open the main menu.
2 Press ❮ button to move to the menu item **Basic settings**.
3 Press ✔ button.
4 Press ❮ button to move to the menu item **Language**.
5 Press _ button.
6 Press ❮ ❯ buttons to move to the required language.
7 Press ✔ button.
The display restarts, and the start screen is displayed.

Resetting to factory settings

1 Press **S** button to open the main menu.
2 Press ❮ button to move to the menu item **Basic settings**.
3 Press ✔ button.
4 Press ❮ button to move to the menu item **Factory settings**.
5 Press _ button.
A signal tone sounds and a message to confirm reset appears.
6 Press ✔ button.
All settings are reset to the factory settings.
7 Press **X** button to exit the menu.

Switching demo mode on or off

The cooling function of the appliance is switched off. All other functions can be used.

Note: Do not store any food in demo mode as the appliance remains at room temperature.

1 Press **S** button to open the main menu.
2 Press ❮ button to move to the menu item **Basic settings**.
3 Press ✔ button.
4 Press ❮ button to move to the menu item **Demo mode**.
5 Press _ button.
6 Press ❮ ❯ buttons to select the setting **On** or **Off**.
7 Press ✔ button.
The setting is saved.
8 Press **X** button to exit the menu.

Rest mode

The appliance switches off the following:

- Automatic door opening

  Note: With handle-free installation, please note that you will not be supported when opening the door during this time. To open the door in this case, reach from below under the bottom panel of the unit.
- Ice maker
- Audible signals
- Interior lighting
- Messages on the display
- Background illumination of display is reduced

Switching rest mode on or off

Displaying or hiding Rest mode in the main menu

To use Rest mode, you first have to display the function in the main menu:

1 Press **S** button to open the main menu.
2 Press ❮ button to move to the menu item **Basic settings**.
3 Press ✔ button.
4 Press ❮ button to move to the menu item **Rest mode**. Press _ button.
5 Press ❯ buttons to move to the menu item **Available** or **Not available**. Confirm by pressing ✔ button.
6 Press **X** button to exit the menu.

The function is displayed or hidden in the main menu.

Switching Rest mode on

1 Press **S** button to open the main menu.
2 Press ◷ button to open the view **Rest mode duration**.
3 Use **−**/**+** buttons to change the duration.
4 Press ▸ button to start.
The appliance switches all listed functions off.

Switching Rest mode off

- After the selected time elapses, the appliance switches to normal operation.
- To end Rest mode before expiry of the selected time, press ■ button.

Automatic door opening

The automatic door opening function supports you in opening the door.
As soon as you activate this function, automatic door opening moves out and supports you in opening the door.

Caution!

Repeatedly closing the door too early will cause automatic door opening to fail or wear out.
Do not close the door as long as automatic door opening is still moved out.
If you have nevertheless closed the door, leave it closed for 5 minutes. Automatic door opening will re-adjust itself.

Open the menu item Automatic door opening:

1 Press **S** button to open the main menu.
2 Use ❮ button to move to the **Basic settings** menu.
3 Press ✔ button to open the menu.
4 Use ❯ button to move to the menu item **Automatic door opening**.
5 To change the setting, press _ button.

Open menu item Automatic door opening of freezer compartment:

1 Press **S** button to open the main menu.
2 Use ❮ button to move to the **Basic settings** menu.
3 Press ✔ button.
4 Use ❯ button to move to the menu item **Automatic door opening**.
5 To change the setting, press _ button.

Switching on Push-to-open system

In an installation situation without handles you can select the Push-to-open system. Your appliance will then open a crack if you press lightly on the door.

Note: Please note that automatic door opening is disabled if Rest mode is activated.

1 Open menu item **Automatic door opening** of refrigerator compartment or freezer compartment.
2 Select menu item **Push-to-open system**.
3 Press ✔ button.
4 Select menu item **Opening force**. Here you can select the level of force required to activate automatic door opening.
5 Select menu item **Opening duration**. Here you can select how long the door should remain open a crack before it closes again automatically.

Note: If the door remains open a crack, the appliance checks once a second whether the door is still ajar.After the selected opening duration elapses, the appliance will close the door automatically.

Switching on Pull-to-open system

In an installation situation with handles you can select the Pull-to-open system. Your appliance will support you in opening the door as soon as you pull on the handle.

1 Open menu item **Automatic door opening** of refrigerator compartment or freezer compartment.
2 Select menu item **Pull-to-open system**.
3 Press ✔ button.
4 Select menu item **Opening force**. Here you can select the level of force required to activate automatic door opening.

Switching off automatic door opening

1 Open the menu item **Automatic door opening**.
2 Select menu item **Off**.
3 Press ✔ button.

Switching on or switching off condensation protection

This function is only available with 3-door appliances. 3-door appliances are equipped with a door pillar with condensation protection.
You can open the left-hand door of the refrigerator compartment without opening the right-hand door beforehand.

Caution!

Never open the door pillar when the door is open! It can get jammed when closing the door and become damaged, or itself damage the front furniture panel of the right-hand door.

A heater is built into the door pillar to prevent condensation. Switching condensation protection on or off switches the heater on and off.

1 Press **S** button to open the main menu.
2 Press ❮ button to move to the menu item **Basic settings**.
3 Press ✔ button.
4 Press the ❮ button to move to the menu item **Condensation protection**.
5 To change the setting, press _ button.

Home network

You can use this function to establish a connection between the refrigerator and your mobile device.
⟶ *"Home Connect" on page 22*

Automatic display lock for cleaning

You can use this function to select whether the clean lock is switched on automatically when the door is opened.

1 Press **S** button to open the main menu.
2 Press ❮ button to move to the **Basic settings** menu item.
3 Press ✔ button.
4 Use ❮ button to move to the **Automatic display lock for cleaning** menu item.
5 To change the setting, press _ button.

Alarm

Door alarm

If the appliance door is open for a long time, the door alarm switches on. A message appears on the control panel.

Switching off the door alarm

- Close the door.

Note: To mute the door alarm, you only have to acknowledge the message on the control panel. If the door remains opens a few more minutes, the message will appear again.

Temperature alarm

If the freezer compartment becomes too warm, the temperature alarm is switched on. A message appears on the control panel. The message shows the warmest temperature reached in the freezer compartment.

Caution!
During the thawing process, bacteria may develop and spoil the frozen food.

Do not refreeze thawing or thawed food.

Refreeze food only after cooking. Do not store the frozen produce for the maximum storage period.

Note: The alarm may be actuated without risk to the food in the following cases:

– The appliance is put into service and does not yet contain any food.
– Large quantities of fresh food are placed in the appliance.
– The freezer compartment door has been open too long.

Switching off the temperature alarm

1 Check that the cause of the temperature alarm has been eliminated.
2 Press ✔ button to acknowledge the message. The message disappears. The control panel again indicates the temperature selected.

From this time on the warmest temperature is measured again and saved.

Home Connect

This appliance is Wi-Fi-capable and can be remotely controlled using a mobile device.

Note: Wi-Fi is a registered trademark of the Wi-Fi Alliance.

In the following cases, the appliance functions like a refrigerator without a network connection and can still be manually operated via the controls:

- The appliance is not connected to a home network.
- Home Connect service is not available in the country in which the appliance is set up. For an overview of the countries in which Home Connect is available, see www.home-connect.com.

Note: Please observe the safety information in this instruction manual. Ensure that this is also observed if you operate the appliance via the Home Connect app and are not at home when doing so.
⟶ *"Safety instructions" on page 4*
Follow the instructions in the Home Connect app as well.

Setting up Home Connect

Notes

- Wait at least 2 minutes after switching on the appliance before setting up Home Connect. Only then is internal appliance initialisation complete.
- Observe the Home Connect supplementary sheet, which is available with the instructions for download under www.gaggenau.com. Enter the E-number of your appliance in the search field.
- To change the settings of your appliance with Home Connect, you have to install the Home Connect app on your mobile device.
  Please observe the supplied Home Connect documents for doing this.
  Follow the steps specified by the app.

Home network menu

Here's how to open the **Home network** menu:

1. Press **S** button to open the main menu.
2. Press ❮ button to move to the menu item **Basic settings**.
3. Press ✔ button to open the menu item.
4. Press ❮ button to move to the menu item **Home network**.
5. Press ✎ button to open the menu item.

   Note: The first time you open the menu, you will be automatically guided through initial setup. Follow the instructions on the control panel. For further information, please also see the following chapters.
6. Press ❮ ❯ buttons to select the required submenu.
7. Press **X** button to exit the menu.

The following submenus can be found in the **Home network** menu:

- Connecting
- Connect to app
- Software update
- Delete network settings

Setting up the connection to the home network

The first time you open the menu, you will be automatically guided through initial setup. Follow the instructions on the control panel.

1. Install the **Home Connect** app on your mobile device.
2. Open the **Home network** menu on your refrigerator.
3. Open the app on your mobile device.
4. Log in or register with the app if access is not yet available.
5. Check the router of your home network to see if a WPS function is available for automatic connection.
6. If this function is available, start automatic network connection with ✔ button.
   Follow the instructions on the control panel.
7. Start manual network connection if this function is not available, if you're not sure whether the function is available or if automatic network connection fails. The refrigerator temporarily generates its own network for connecting the mobile device.
8. Start manual network connection in the app of your mobile device.

As soon as the refrigerator is connected to the mobile device, a connection between the refrigerator and your home network is established.

Note: If the connection cannot be established, check whether there is sufficient reception.
⟶ *"Verify signal strength" on page 22*

Verify signal strength

The signal strength is displayed in the start window of the **Home network** menu. The signal strength should be at least 50 %. If the signal strength is too low, the connection could be interrupted.

Improving the signal strength

- Place the router closer to the refrigerator.
- Ensure that the connection is not interfered with by screening walls.
- Install a repeater to make the signal stronger.

Connecting the refrigerator to the Home Connect app

Use this menu to connect your refrigerator to mobile devices.

1 Install the **Home Connect** app on your mobile device and log in or register.
2 Open the **Home network** menu on your refrigerator.
⟶ *"Setting up Home Connect" on page 22*
3 Press › button to move to the menu item **Connect to app**.
4 Press _ button to open the menu item.
5 Confirm the message to display the refrigerator in the app.
6 Open the app and wait until the refrigerator is displayed.
Use **Add** to confirm the connection between the app and the refrigerator.
If the refrigerator is not automatically displayed, click on **Add appliance** in the app and follow the instructions. As soon as your refrigerator is displayed, add it with **+**.
7 Follow the instructions in the app until the process is complete.

Installing updates for the Home Connect software

The refrigerator checks at regular intervals whether updates are available for the Home Connect software.

If an update is available, a small **S** exclamation mark appears on the **S** button.

Installing the update:

1 Press **S** button.
The special menu **Home network note** opens.
2 Press ✓ button to open the menu item.
A note window with the necessary steps for installing the new software appears.
3 To close the note window, press ✓ button.
4 Open the **Home network** menu on your refrigerator.
⟶ *"Setting up Home Connect" on page 22*
5 Press › button to move to the menu item **Software update**.
6 Press _ button to open the menu item.
Note: The _ button is only visible if an update is available.
Installing new software.
7 A note appears as soon as installation is complete.
8 Press ✓ button to close the note.

Customer Service access

If you contact Customer Service, they can access your appliance and view its status after you have given your consent. You need to have your appliance connected to your home network for this.

Further information about Customer Service access and its availability in your country is available under www.home-connect.com in the Help & Support area.

1 Contact Customer Service.
⟶ *"Customer service" on page 33*
2 Confirm the start of Customer Service access in the app.
During Customer Service access the symbol appears on the control panel.
3 As soon as Customer Service has obtained the necessary data, they end access.
Note: You can interrupt remote diagnosis early by switching off Customer Service access in the Home Connect app.

Delete network settings

If there is a problem when trying to establish a connection or if you would like to register the appliance in a different home network (WLAN), the Home Connect settings can be reset.

1 Open the **Home network** menu on your refrigerator.
⟶ *"Setting up Home Connect" on page 22*
2 Press › button to move to the menu item **Delete network settings**.
3 Press _ button to open the menu item.
4 Confirm the message to delete the network settings.

To reconnect the appliance to the home network, perform initial setup again.
⟶ *Page 22*

Information on data protection

The first time your Home Connect appliance is registered on the WLAN network connected to the Internet, your appliance will transmit the following types of data to the Home Connect server (initial registration):

- Unique appliance identification (consisting of appliance codes as well as the MAC address of the installed Wi-Fi communication module).
- Security certificate of the Wi-Fi communication module (to ensure a secure IT connection).
- The current software and hardware version of your domestic appliance.
- Status of any previous resetting to factory settings.

This initial registration prepares the Home Connect functions for use and is only required when you want to use these Home Connect functions for the first time.

Note: Be aware that the Home Connect functions can only be utilised with the Home Connect app. Information on data protection can be called up in the Home Connect app.

Declaration of conformity

Gaggenau Hausgeräte GmbH hereby declares that the appliance with Home Connect functionality meets the essential requirements and other relevant provisions of Directive 2014/53/EU.

A detailed RED Declaration of Conformity can be found online at www.gaggenau.com among the additional documents on the product page for your appliance.

CE

2.4 GHz band: 100 mW max.
5 GHz band: 100 mW max.

	BE	BG	CZ	DK	DE	EE	IE	EL
	ES	FR	HR	IT	CY	LV	LT	LU
	HU	MT	NL	AT	PL	PT	RO	SI
	SK	FI	SE	UK	NO	CH	TR	

5 GHz WLAN: for indoor use only

Refrigerator compartment

The refrigerator compartment is suitable for storing meat, sausages, fish, dairy products, eggs, ready meals and pastries.

The temperature can be set from +2 °C ... +8 °C.

The refrigerator compartment can also be used to store highly perishable foods in the short to medium term. The lower the selected temperature, the slower the enzymatic and chemical processes and deterioration by microorganisms. A temperature of +4 °C or lower ensures optimum freshness and safety of the stored foods.

Note when storing food

Note: Avoid contact between food and the rear panel. Otherwise, the air circulation will be impaired and food or packaging may freeze to the rear panel.

- Store fresh, undamaged food.

  The quality and freshness will then be retained for longer.
- In the case of ready products and bottled goods do not exceed the minimum sell-by date or use-by-date indicated by the manufacturer.
- To retain aroma, colour and freshness, pack or cover food well before placing it in the appliance.

  This avoids transference of flavours and discolouration of the plastic parts.
- Leave warm food and drinks to cool down before placing them in the refrigerator compartment.

Note the chill zones in the refrigerator compartment

The air circulation in the refrigerator compartment creates different chill zones.

Coldest zone

The coldest zone is in the interior at the rear wall and in the chill compartment.

Note: Store perishable food (e.g. fish, sausages and meat) in the coldest zone.

Warmest zone

The warmest zone is at the very top of the door.

Note: Store e.g. hard cheese and butter in the warmest zone. Cheese can continue to release its flavour and the butter will still be easy to spread.

Vegetable container with humidity control

The vegetable container is the best storage location for fresh fruit and vegetables.You can adjust the humidity in the vegetable container via the humidity controller and a special seal. This allows fresh fruit and vegetables to be stored up to twice as long as with conventional storage.

The humidity in the vegetable container can be set according to the type and amount of products to be stored:

- Mainly fruit as well as for a large load – set lower humidity with controller position ◊
- Mainly vegetables as well as for a mixed or small load – set higher humidity with controller position ◊◊◊

Notes

– Fruit sensitive to cold (e.g. pineapple, banana, papaya and citrus fruit) and vegetables sensitive to cold (e.g. aubergines, cucumbers, courgettes, peppers, tomatoes and potatoes) should be stored outside the appliance at temperatures of approx. +8 °C ... +12 °C for optimum preservation of quality and flavour.

– Condensation may form in the vegetable container depending on the food and quantity stored. Remove condensation with a dry cloth and adjust the humidity in the vegetable container with the humidity controller.

Chill comp.

The chill compartment has lower temperatures than the refrigerator compartment. Temperatures below 0 °C may occur.

Ideal for storing fish, meat and sausage.

Note: Not suitable for storing lettuce, vegetables or food that is sensitive to the cold.

Freezer compartment

The freezer compartment is suitable for:

- storing frozen food
- making ice cubes
- freezing food

The temperature can be set from -24 °C ... -14 °C.

The freezer compartment can be used to store perishable foods long-term almost without any noticeable reduction in quality as the low temperatures considerably slow down or stop deterioration. Appearance, flavour and all valuable ingredients are largely retained.

The time between putting fresh food in the freezer compartment and it freezing solid depends on the following factors:

- set temperature
- type of food
- amount of food in the freezer compartment
- quantity and type of storage

Maximum freezing capacity

The maximum freezing capacity indicates the quantity of food that can be frozen solid within 24 hours.

Information on the maximum freezing capacity can be found on the rating plate.
⟶ *"Getting to know your appliance" on page 10*

To use the maximum freezing capacity, switch on fast freezing 24 hours before placing the fresh food in the freezer compartment.
⟶ *"Fast freezing" on page 16*

Prerequisites for max. freezing capacity

1. Approx. 24 hours before inserting fresh produce: switch on fast freezing.
   ⟶ *"Fast freezing" on page 16*
2. Take the container out of the freezer compartment and stack the food directly on the shelves and on the floor of the freezer compartment.
3. First fill the upper compartment with food. This is where the food will freeze most quickly.
4. If the top compartment is inadequate, store the remaining quantity in the compartment underneath.

Fully utilising the freezer volume

To place the maximum quantity of frozen food in the freezer compartment:

- remove all fittings.
- Store food directly on the shelves and on the floor of the freezer compartment.

Purchasing frozen food

- Check the packaging is not damaged.
- Check there is a sell-by date.
- The temperature in the supermarket freezer must be -18 °C or lower.
- Do not interrupt the freezing chain. If possible, transport frozen food in a cool bag and place in the freezer compartment quickly.

Note when loading products

- Freeze large quantities of food in the top compartment.

  This is where the food will freeze especially quickly and gently.
- Distribute food in the compartments or frozen food containers.
- Do not bring food which is to be frozen into contact with frozen food.

  If required, restack frozen food in the frozen food containers.
- Important for unrestricted air circulation in the appliance:
  push in frozen food container all the way.

Freezing fresh food

Freeze only fresh and undamaged food.

Food which is boiled, fried or baked is more suitable for freezing than food which is raw.

Before freezing food, make preparations appropriate to the food in order to retain the best possible nutritional value, flavour and colour:

- Vegetables: wash, chop, blanch.
- Fruit: wash, pit and perhaps peel, possibly add sugar or ascorbic acid solution.

Information on how to do this can be found in the relevant literature.

Suitable for freezing

- Baked goods
- Fish and seafood
- Meat
- Poultry and game
- Vegetables, fruit and herbs
- Eggs without shells
- Dairy products, e.g. cheese, butter and quark
- Ready meals and leftovers, e.g. soups, stews, cooked meat and fish, potato dishes, soufflés and desserts

Not suitable for freezing

- Types of vegetables which are usually eaten raw, e.g. lettuce or radishes
- Unpeeled or hard boiled eggs
- Grapes
- Whole apples, pears and peaches
- Yoghurt, soured milk, sour cream, creme fraiche and mayonnaise

Packing frozen food

The correct type of packaging and material selection are decisive factors in the retention of the product quality and prevent the development of freezer burn.

1 Place food in packaging.
2 Remove air.
3 Pack food airtight to prevent it from losing flavour and drying out.
4 Label packaging with contents and date of freezing.

Suitable packaging:

- Plastic film
- Tubular film made of polyethylene (PE)
- Aluminium foil
- Freezer containers

Suitable locks:

- Rubber bands
- Plastic clips
- Cold-resistant adhesive tape

Not suitable packaging:

- Wrapping paper
- Greaseproof paper
- Cellophane
- Refuse bags and used shopping bags

Shelf life of frozen food at –18 °C

Fish, sausage, ready meals and cakes and pastries:	up to 6 months
Meat, poultry:	up to 8 months
Fruit, vegetables:	up to 12 months

Thawing frozen food

The thawing method must be adjusted to the food and application in order to retain the best possible product quality.

Thawing methods:

- in the refrigerator compartment (especially suitable for animal-based foods such as fish, meat, cheese, quark)
- at room temperature (bread)
- in the microwave (food for immediate consumption or immediate preparation)
- in the oven/cooker (food for immediate consumption or immediate preparation)

Caution!

Do not refreeze thawing or thawed food. You can only refreeze the food when it has been used for a ready-to-eat meal (boiled or fried).

The frozen food can no longer be stored for the maximum duration.

Cleaning

Caution!
Avoid damaging the appliance and the fittings.

- Do not use abrasive, chloride or acidic cleaning agents or solvents.
- Do not use scouring or abrasive sponges. The metallic surfaces may corrode.
- Never clean the shelves or containers in the dishwasher. The parts may become deformed.

Cleaning the display

The change in temperature and humidity can cause the controls to steam up.

Switch the clean lock on before cleaning.
⟶ *"Display lock for cleaning" on page 16*

Use a clean microfibre cloth for cleaning.

Cleaning the appliance interior

Proceed as follows:

1. Press the **main On/Off switch**.
2. Take out the food and store in a cool location. Place ice pack (if available) on the food.
3. Clean the appliance with a soft cloth, lukewarm water and a little pH-neutral washing-up liquid.

   Caution!
   The rinsing water must not run into the light or through the drainage hole into the evaporation area.
4. Wipe the door seal with clean water and dry thoroughly with a cloth.
5. Switch appliance back on and put in food.

Cleaning the equipment

To clean, take the variable parts out of the appliance.
⟶ *"Interior fittings" on page 13*

Care instructions for stainless steel surfaces

When taking care of and cleaning stainless steel surfaces, use only cleaning agents suitable for stainless steel and a stainless steel cleaning cloth.

You can purchase a suitable stainless steel cleaning cloth from customer service.

To prevent visible scratches, clean the stainless steel surface in the direction of the structure.

Odours

If you experience unpleasant odours:

1 Pull out the mains plug or switch off the fuse.

2 Take all food out of the appliance.

3 Clean the inside.
⟶ *"Cleaning" on page 28*

4 Clean all packages.

5 Seal strong-smelling food to prevent odours from forming.

6 Switch the appliance on again.

7 Arrange food in the appliance.

8 Check whether odours are still occurring after 24 hours.

9 Change the odour filter.
⟶ *"Exchanging the odour filter" on page 29*

Exchanging the odour filter

Replacement filters are available from your customer service.

1 Open filter holder with slotted screwdriver.

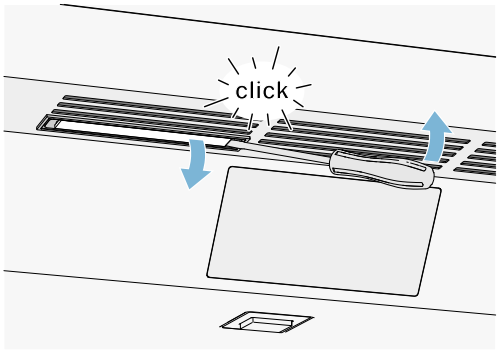

2 Remove the used odour filter and replace with a new odour filter.

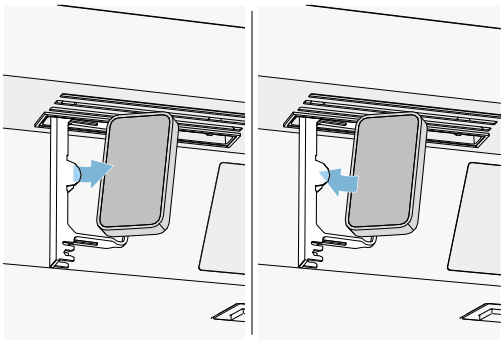

3 Close the filter holder.

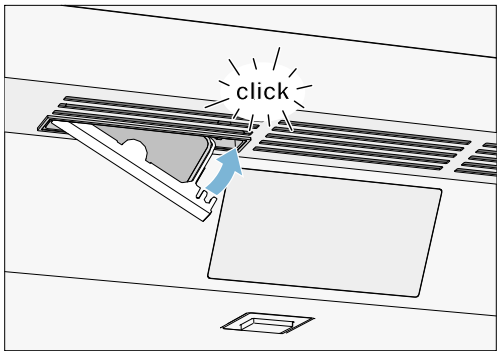

Noises

Normal noises

Droning: A motor is running, e.g. refrigerating unit, fan.

Bubbling, buzzing or gurgling: Refrigerant is flowing through the tubes.

Clicking: Motor, switches or solenoid valves are switching on and off.

Cracking: Automatic thawing successful.

Preventing noises

Appliance is not level: Align appliance using a spirit level. If required, place a little packing underneath.

Containers, shelves or storage compartments wobble or stick: Check the removable fittings and re-insert if required.

Lighting

Your appliance features a maintenance-free LED light.

Only customer service or authorised technicians may repair the light.

Faults – what to do?

Before you call customer service, use this table to check whether you can rectify the fault yourself.

Appliance

Temperature differs greatly from the set value.

	Switch off appliance for 5 minutes. ⟶ *"Switching off and disconnecting the appliance" on page 15* If the temperature is too warm, check temperature again after a couple of hours. If the temperature is too cold, check temperature again on the following day.

Displays do not illuminate.

The mains plug has not been inserted properly.	Connect the mains plug.
The fuse has tripped.	Check the fuses.
The power has failed.	Check whether the power is on.

The refrigeration unit is switching on more frequently and for longer.

The appliance was opened frequently.	Do not open the appliance unnecessarily.
The ventilation openings are covered up.	Remove obstructions.
Large quantities of fresh food have been put in.	Switch on super cooling promptly in advance.

Appliance is not cooling, display and lighting are lit.

Demo mode is switched on.	Switch demo mode off. ⟶ *"Switching demo mode on or off" on page 19*

The door does not open when pressed.

A special mode has switched off automatic door opening.	To open the door, reach from below under the bottom panel of the unit or switch off special mode. ⟶ *"Switching rest mode on or off" on page 19*
Pull-to-open is switched on.	Switch the appliance to Push-to-open. ⟶ *"Automatic door opening" on page 20*
The opening force is set too high.	Select a lower setting for the opening force. ⟶ *"Automatic door opening" on page 20*
The fuse has tripped.	Check the fuses.
The power has failed.	Check whether the power is on.

Ice maker

The ice maker is not functioning.

Ice cube production is switched off.	Switch on ice cube production.
Freezer compartment is too warm.	Set the temperature lower. ⟶ *"Operating the appliance" on page 15*
Ice cube container is not properly inserted.	Insert ice cube container fully.
Ice maker without power.	Call our after-sales service. ⟶ *"Customer service" on page 33*
No water supply.	Check water connection and contact technician if necessary.
Low water pressure.	Only connect appliance to pipes with sufficient water pressure.
Kink in water hose.	Turn off water supply, straighten out kink. Replace water hose, if necessary.

Too few or deformed ice cubes, water pressure lower than usual.

After switching on or removing many ice cubes, there will be too few in the ice cube container.	It takes around 24 hours for an empty ice cube container to fill up.
Ice cube production stops even though the ice cube container is not yet full.	Do not store the ice shovel on the ice in the ice cube container. Otherwise, the sensor will not detect the actual fill level of the container.
Low water pressure.	Only connect appliance to pipes with sufficient water pressure.
The water filter is blocked or needs to be replaced.	Replace water filter.
Freezer compartment is too warm.	Set the temperature lower. ⟶ *"Operating the appliance" on page 15*

Water is leaking out of the appliance.

Water connection is not tight.	Check if the connections are fastened firmly and the water hose is undamaged. If the water hose is damaged, contact customer service and have it replaced. Replacement must be performed by customer service or a similarly qualified person.Use original parts supplied by the manufacturer only.

Customer service

If you are unable to rectify the fault, please contact our customer service. We will always find an appropriate solution in order to avoid unnecessary visits by engineers.

The contact information for your nearest customer service can be found here or on the enclosed customer service list.

When calling, please state the product number (E-Nr.) and the production number (FD) which can be found on the rating plate.
⟶ *"Getting to know your appliance" on page 10*

Trust the expertise of the manufacturer. You can therefore be sure that the repair is carried out by trained service technicians who carry original spare parts for your domestic appliances.

Appliance self-test

Your appliance features a self-test programme which displays the fault which your customer service can rectify.

1. Press **S** button to open the main menu.
2. Press **›** button to move to the **Self-test** menu item.
3. Press ✔ button to start the self-test.
   The self-test starts.
4. If faults are present, they will be displayed. In this case, follow the instructions.
5. The appliance restarts.
6. The message that the self-test has finished is displayed for 10 seconds. To acknowledge the message, press ✔ button.

When the self-test has ended, the appliance switches over to normal operation.

Repair order and advice on faults

Contact information for all countries can be found on the enclosed customer service list.

GB	0344 892 8988	Calls charged at local or mobile rate.
IE	01450 2655	0.03 € per minute at peak. Off peak 0.0088 € per minute.
US	877 442 4436	toll-free

Gaggenau Hausgeräte GmbH
Carl-Wery-Straße 34
D-81739 München
www.gaggenau.com

9001282768 (9809) en

GAGGENAU