USER MANUAL

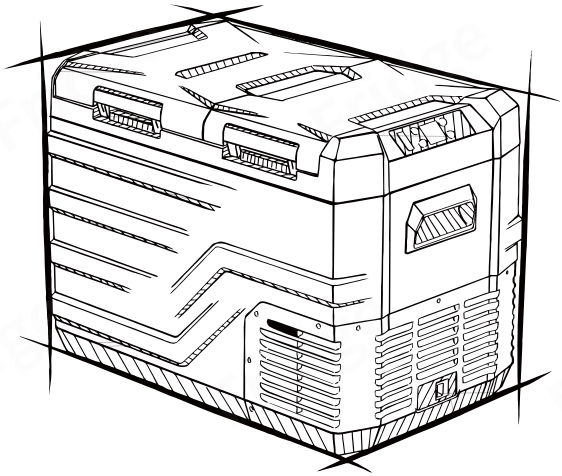

Model NLS35 NLS45 NLS55

Please read this operating manual carefully before starting the device.
Keep it in a safe place for future reference.

CONTENTS

1.SAFETY INSTRUCTIONS Page1

2.PRODUCT FEATURES Page3

3.PRODUCT STRUCTURE Page3

4.REVERSE DOOR OPENING DIRECTION Page3

5.FUNCTION AND OPERATION Page4

6.CARE AND MAINTENANCE Page5

7.TROUBLESHOOTING Page6

8.WARRANTY Page7

9.TECHNICAL INFORMATION Page7

1.SAFETY INSTRUCTIONS

WARNING!

- Do not operate the appliance if it is visibly damaged.
- Do not block the gaps of the fridge with things like pin, wire, etc.
- Do not expose the appliance to rain or soak it in water.
- Do not place the appliance near naked flames or other heat sources (heaters, direct sunlight, gas ovens etc.)
- Do not store any explosive substances like spray cans with a flammable propellant.
- Ensure the supply cord is dry and not trapped or damaged. Do not locate multiple portable socket-outlets or portable power supplies at the rear of the appliance.
- Check the voltage specification on the type plate corresponds to that of the energy supply. The appliance is only to be used with the power supply unit provided with the appliance.
- Do not use electrical appliances inside the food storage compartments of the appliance, unless they are of the type recommended by the manufacturer.
- Once unpacked and before turning on, the appliance must be placed on a level surface for more than 6 hours.
- Make sure that the appliance stays horizontally when it is running. The tilt angle must be less than 5° for long time running and be less than 45° for short time running.
- Keep the ventilation openings in the unit casing or in the built-in structure free of obstacles.
- Keep the appliance stable on the ground or in the car; Do not drain upside down.
- When positioning the appliance, ensure the supply cord is not trapped or damaged.
- Do not locate multiple portable socket-outlets or portable power supplies at the rear of the appliance.
- Risk of child entrapment. Before you throw away your old refrigerator or freezer:

* Take off the doors.

* Leave the shelves in place so that children may not easily climb inside.

- Do not use mechanical devices or other means to accelerate the defrosting process, other than those recommended by the manufacturer.
-  : Risk of fire/ flammable materials.

CAUTION!

- Repairs may only be carried out by qualified personnel. Incorrect repair may cause danger. The lamp and supply cord must be replaced by the manufacturer or qualified persons.
- The installation of DC power in the boat must be handled by qualified electricians.
- Children shall not play with the appliance. Cleaning and user maintenance shall not be made by children without supervision.

- The appliance can be used by children aged from 8 years and above and persons with reduced physical, sensory or mental capabilities or lack of experience and knowledge if they've been given supervision or instruction concerning use of the device in a safe way and understand the hazards.

NOTICE!

- Disconnect the power supply before each cleaning and maintenance and after every use.
- Do not use sharp tools to defrost; Do not damage the refrigerant circuit.
- Risk of child entrapment. Before you throw away your old refrigerator or freezer: take off the doors: leave the shelves in place so that children may not easily climb inside.
- Check if the cooling capacity of the appliance is suitable for storing the food or medicine. Food may only be stored in its original packaging or in suitable containers.
- If the appliance is left empty for long periods, switch off, defrost, clean, dry, and leave the door open to prevent mould developing within the appliance.
- The appliance is intended to be used in household and similar applications such as:
  - Staff kitchen areas in shops, offices and other working environments;
  - Camping, Farm houses and by clients in hotels, motels and other residential environments;
  - Bed and breakfast type environments;
  - Catering and similar non-retail applications.
- To avoid contamination of drink, please respect the following instructions:
  - Opening the door for long periods can cause a significant increase of the temperature in the compartments of the appliance.
  - Clean regularly surfaces that can come in contact with drink and accessible drainage systems.
  - Store raw meat and fish in suitable containers in the refrigerator, so that it is not in contact with or drip onto other food;
  - Store raw meat and fish in suitable containers in the refrigerator, so that it is not in contact with or drip onto other food.
  - If the refrigerating appliance is left empty for long periods, switch off, defrost, clean, dry, and leave the door open to prevent mould developing within the appliance.

Please according to local regulations regarding disposal of the appliance for its flammable refrigerant and blowing gas.

2.PRODUCT FEATURES

- High-efficiency DC compressor and conversion module.
- CFC free and great heat insulation.
- DC12/24V or AC100~240V (using dedicated adapter) power supply.
- Fast cooling to -20°C/-4°F(based on 25°C/77°F room temperature).
- Intelligent battery protection system.
- LED display for temperature setting, USB charging port: 5V/1A
- Dual compartments with individual temperature control.
- Specific parts: door latch, reversible door, built-in handle, storage baskets(optional).

3.PRODUCT STRUCTURE

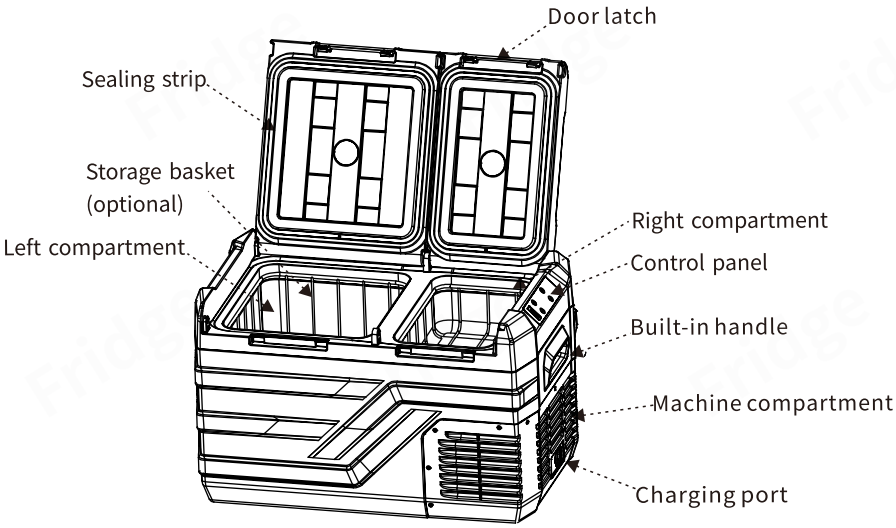

4.REVERSE DOOR OPENING DIRECTION

The door has two opening directions and can be taken off at an angle of 45°. When installing it back, align the door shaft with the compartment hole and then insert it.

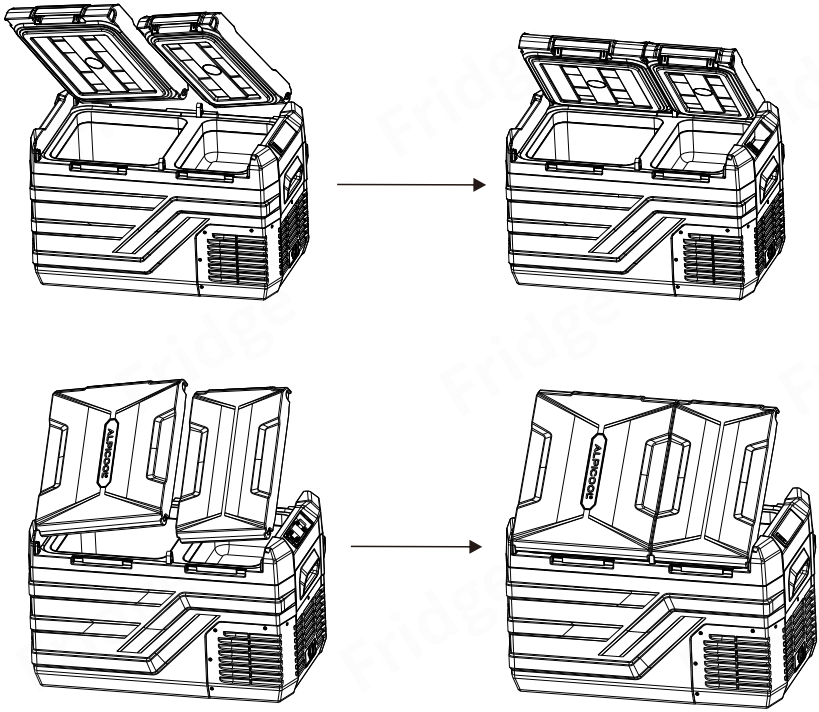

5.FUNCTION AND OPERATION

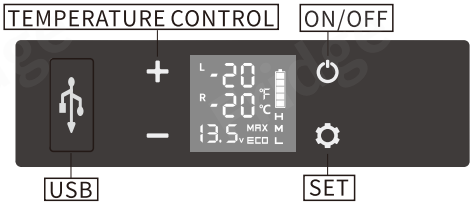

*** Note: the right compartment is on the side where the compressor is.**

• **Power Supply:** connect to 12V/24V DC or 100~240V AC power(using dedicated adapter).

• **Display Screen Initialization:** connect to the power supply, the buzzer will make a long beep, and the display will be on for 1 second then enter the normal operating mode.

• **Power ON/OFF:** press ⏻ to switch ON/OFF.

• **Temperature Setting:** under the running state, long press + and ⚙ at the same time for three seconds to switch ON/OFF the left compartment, long press − and ⚙ at the same time for three seconds to switch ON/OFF the right compartment, two compartments cannot be switched OFF at the same time.

When both left and right compartments are set in running state, press + or − to enter left compartment temperature setting, press + to increase temperature, press − to decrease temperature, and press ⚙ to switch left/right compartment. The setting will be saved after stop operating for 3 seconds. Note: the temperature displayed is the current temperature of the compartments, it' ll take a while to reach the set temperature.

Temperature setting range: -20~20°C (-4~68°F).

• **Cooling Mode:** under the running state, press ⚙ to switch MAX (fast cooling mode) and Eco(energy saving mode).(*Factory setting is MAX.)

• **Battery Protection Mode:** under the running state, long press ⚙ for 3 seconds until the screen flashes, then press ⚙ again to switch High(H),Medium(M) and Low(L) (*Factory setting is High).

Voltage Reference:

INPUT / MODE	DC 12V		DC 24V	
	CUT OUT	CUT IN	CUT OUT	CUT IN
L	8.5V	10.9V	21.3V	22.7V
M	10.1V	11.4V	22.3V	23.7V
H	11.1V	12.4V	24.3V	25.7V

* the voltage is theoretical value, there may be a deviation in different sceneries.

* H should be set when the product is connected to car power, and M or L should be set when it is connected to a portable battery or other back-up battery.

• **Temperature Unit Setting:** switch OFF the fridge, long press ⚙ for three seconds until E1 displays, then switch to E5 by pressing ⚙ again. Under E5 mode, press + or − to select Celsius or Fahrenheit.(*Factory setting is °C.)

• **Reset:** switch OFF the fridge, long press ⚙ for three seconds until E1 displays, under E1 mode, long press + − at the same time for three seconds to reset it.

• **Recommended temperature for common food:**

						
Drinks	Fruits	Vegetable	Delicatessen	Wine	Ice cream	Meat
5°C/41°F	5~8°C/41~46°F	3~10°C/37~50°F	4°C/39°F	10°C/50°F	-10°C/14°F	-18°C/0°F

6.CARE AND MAINTENANCE

■Cleaning:

- Unplug the device first to avoid electric shock.
- Use wet cloth to clean the device and dry it.
- Remove the cover and drain from the hole at the bottom of the device.
- Do not soak the device in water and do not wash it directly.
- Do not use abrasive cleaning agents as these can damage the device.

■Storage:

If the device will not be in use for a long time, please follow the steps:

- Turn off the power and remove the plug.
- Remove all the items stored in the device.
- Remove the cover and drain from the hole, wipe off excess water with a soft rag.
- Leave the lid slightly open to prevent odors from forming.
- Put the device in a cool and dry place.

■Defrosting:

Humidity can form frost in the interior of the cooling device or on the evaporator, which will affect the cooling performance. Defrost the device regularly to avoid this.

- Switch off the device.
- Take out the contents of the device.
- Keep the lid open.
- Remove the cover and drain from the hole.
- Wipe off the defrosted water.

Never use hard or sharp tools to remove ice or to loosen objects which have frozen in place.

7.TROUBLESHOOTING

Issues	Cause/Suggestions
Refrigerator does not work	• Check if the switch is on. • Check if the plug and socket are connected well. • Check if the fuse has been burnt. • Check if the power supply is malfunctioned. • Switch on/off the fridge frequently may cause start delay of the compressor.
Refrigerator compartments are too warm	• The door is opened frequently. • A large amount of warm or hot food was stored recently. • The refrigerator has been disconnected for a long time.
Food is frozen	• The temperature was set too low.
There is "water flow" noise from inside the refrigerator	• It's a normal phenomenon, caused by the flow of refrigerant.
There are waterdrops around the refrigerator casing or door gap	• It's a normal phenomenon, the moisture will condense to water when it touches a cold surface of the refrigerator.
The compressor is slightly noisy when starting	• It's a normal phenomenon, the noise will be reduced after the compressor works stably.
Code F1 displayed	• Possible cause: low voltage to fridge. Adjust the battery protection from High to Medium or from Medium to Low.
Code F2 displayed	• Possible cause: condenser fan is overloaded. Disconnect power to fridge for 5 minutes & re-start. If the code shows again, contact manufacturer for service.
Code F3 displayed	• Possible cause: the compressor starts too frequently. Disconnect power to fridge for 5 minutes & re-start. If the code shows again, contact manufacturer for service.
Code F4 displayed	• Possible cause: compressor not kicking in. Disconnect power to fridge for 5 minutes & re-start. If the code shows again, contact manufacturer for service.
Code F5 displayed	• Possible cause: overheating of the compressor & electronics. Disconnect power to fridge for 5 minutes & re-start. If the code shows again, contact manufacturer for service.
Code F6 displayed	• Possible cause: no parameter can be detected by the controller. Disconnect power to fridge for 5 minutes & re-start. If the code shows again, contact manufacturer for service.
Code F7 or F8 displayed	• Possible cause: temperature sensor is faulty. Contact manufacturer for service.

8.WARRANTY

If the device gets malfunctional, the compressor limited warranty will be provided for 3 year from the date of purchase, except following situations:

- Contrived damage.
- Damage caused by force majeure such as earthquake, conflagration, etc.
- Damage from inappropriate use or violating this instruction.
- Damage or malfunction caused by disassembling.

9.TECHNICAL INFORMATION

MODEL	NLS 35	NLS 45	NLS 55
RATED VOLTAGE	DC12/24V or AC100~240V(using dedicated adapter)		
RATED POWER	60W		
CAPACITY	23.3L/0.82 Cu.Ft.	31.3L/1.1 Cu.Ft.	39L/1.38 Cu.Ft.
LEFT COMPARTMENT CAPACITY	18.6L/0.66 Cu.Ft.	23.3L/0.8 Cu.Ft.	27.8L/0.98 Cu.Ft.
RIGHT COMPARTMENT CAPACITY	4.7L/0.16 Cu.Ft.	8L/0.3 Cu.Ft.	11.2L/0.4 Cu.Ft.
NOISE	⩽45dB		
TEMPERATURE SETTING RANGE	-20~20°C (-4~68°F)		
CLIMATE CATEGORY	T/ST/N		
DIMENSIONS (L*W*H)	618*376*372mm 24 5/16* 14 13/16* 14 5/8 inch	618*376*442mm 24 5/16* 14 13/16* 17 3/8 inch	618*376*514mm 24 5/16* 14 13/16* 20 1/4 inch
NET WEIGHT	12kg/26.5lb	13kg/28.6lb	13.6kg/29.9lb

*Due to product improvement, the technical information might be different from actual information, please refer to the rating label on the product.