NORCOLD®

SERVICE MANUAL

121X Series Gas/Electric Refrigerators

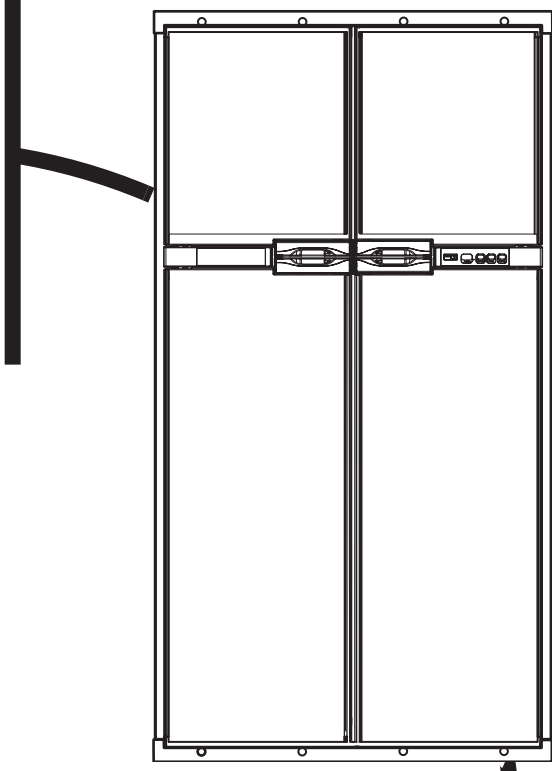

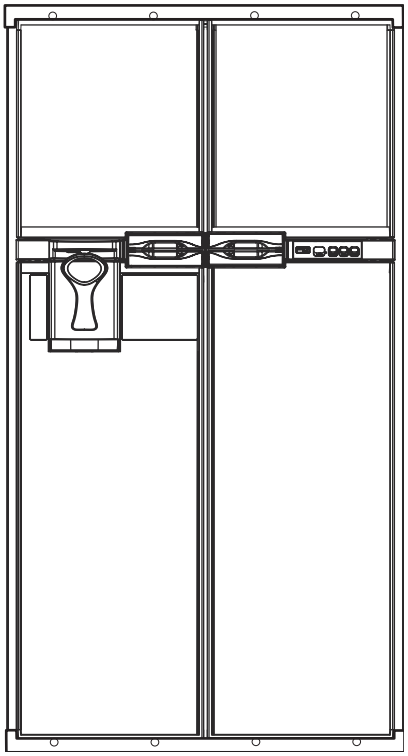

© NORCOLD, INC. All rights reserved.

Publication No. 630613B (08-10-07)

This page intentionally left blank

About this Manual

This service manual provides maintenance, diagnostic, and repair information for NORCOLD® model 121X-XX gas absorption refrigerators.

The information, illustrations, and specifications contained in this publication are based on the latest product information available at the time of publication. NORCOLD® reserves the right to make changes at any time without notice.

Intended Use

This service manual is reference tool designed for technicians who are knowledgeable in the theory and operation of gas absorption refrigerators, liquefied petroleum (LP) gas–propane–systems, and AC/DC electrical systems as installed in a variety of recreational vehicles (RV).

How this Service Manual is Organized

Section—1: Introduction

This section covers refrigerator model and cooling system identification, certification, installation reference, replacement part statement, technical support contact, safety awareness.

Section—2: Specifications

Provides specifications applicable to 121X-XX series refrigerators.

Section—3: Troubleshooting Flowcharts.

This section covers troubleshooting information and flowcharts for faults displayed through the optical control display assembly screen.

Section 4: Ventilation

This section covers installation and ventilation information to assist technicians in the inspection and correction of installations not conforming to installation requirements and guidelines.

Section 5: LP Gas System

This section covers LP gas system pressure requirements, the effects of low or high LP gas pressure, gas valve information and specifications, gas valve serviceability, gas valve replacement procedures, gas valve solenoid coil resistance check, burner tube information, burner and orifice assembly information, burner and orifice cleaning procedure,

Section 6: Electrical Components

This section covers DC power requirement, polarity of connections, power board DC fuse, light assembly, light bulb replacement, thermistor wire assembly, thermistor assembly replacement, divider heater, fans, fans thermostatic switch, fan replacement procedure, flapper assembly, flapper assembly replacement, spring pin replacements, AC power requirements, AC power cords, AC fuse, and AC heaters.

Section 7: Electronic Controls

This section covers the power board, optical control display assembly and replacement of boards

Section 8: Cooling System.

This section covers cooling system refrigerant, leveled operation requirement, poor cooling issues, cooling issues related to cooling system performance, voltage and component effects on cooling performance, LP gas pressure and components issues related to cooling performance, electrical operated components failure related to cooling performance, dirty flue effects on flame performance, flue cap blocked or jammed over flue opening, exceeding maximum level limits effect on cooling system performance, inadequate repairs and unauthorized modifications, cooling system monitoring system, high temperature monitoring system, cooling system replacement, cooling system testing, diagnostic flow chart, and cooling unit replacement procedure.

Section 9: Diagnostics

This section covers accessing and navigating through the built in diagnostics, screens identification and segments description.

Section 10: Ice Maker

This section covers ice maker specifications, operational description, troubleshooting chart, replacement procedure, ice maker cycle testing, water valve operation, water valve replacement, water fill line heater, water fill line thermostatic switch information, and ice maker module troubleshooting procedures.

Section 11: Water Dispenser

This section covers water dispenser operation, water valve replacement, reservoir replacement, dispenser switch replacement, and LED circuit board replacement.

Section 12: Wiring Schematics and Pictorials

This section provides wiring schematics and pictorials for models 121X-XX series refrigerator.

SECTION 1 —INTRODUCTION

Refrigerator Identification

The 121X-XX series gas absorption refrigerator cools on 120 volt AC power or propane gas. The 1210 AC series cools only on AC power. These refrigerators electronic controls operate on 12 volt DC.

Model Letter Codes

The letter after the model number identify optional factory installed components. For example, a 121XIMSS has a factory installed ice maker and stainless steel panel wrapped around style doors.

Information Label

The location of the information label is illustrated in Figure 1-1, page 4. It provides the following information:

- Serial number.
- Model number.
- LP gas (propane) pressure.
- Btu/hr.
- AC voltage and amperage.
- DC voltage and amperage.
- Design certification.
- Vent kit requirement.

Cooling System Serial Number

All genuine Norcold cooling systems are serialized. Serial number labels location are illustrated in Figure 1-2, page 4.

Certification Information

The 121X-XX series gas absorption refrigerators are certified under *ANSI Z21.19B* standards for installation in mobile homes or recreational vehicles and under Canadian Standards Association *CAN/CGA-1.4-M94.*

Electrical components comply with UL standards.

Replacement Parts

It is advisable to use only authorized **NORCOLD®** replacement parts. Generic parts do not meet **NORCOLD®** specifications for safety, reliability and performance.

The use of unauthorized aftermarket or generic replacement parts voids the refrigerator's limited warranty coverage.

Technical Assistance

Technical assistance is available to service centers through NORCOLD® Customer Service Center.

☎ Telephone: 1-800-444-7210.

🖷 Fax: 1-937-497-3183.

World Wide Web: www.norcold.com/cda

◀IMPORTANT▶

www.norcold.com/cda subscription are available only to service centers.

The following information will be required to process technical help requests if the product is in warranty and has not been registered with **NORCOLD®**

- Customer last and first name.
- Address, City, State, Zip Code.
- Telephone number.
- E-mail address (optional).
- Refrigerator model number and serial number.
- RV Make, Model and Year.
- Complete RV VIN number.
- Floor plan number/description.
- RV date of purchase.

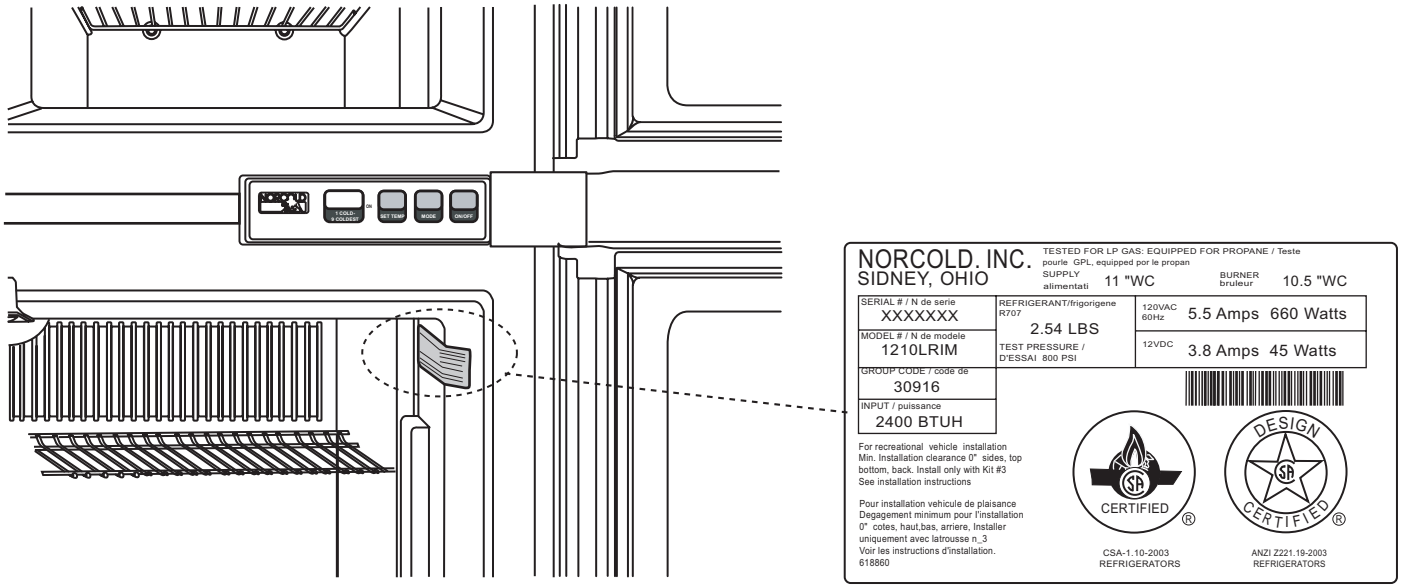

Figure 1-1. —Location of refrigerator information label (1210LRIM label illustrated).

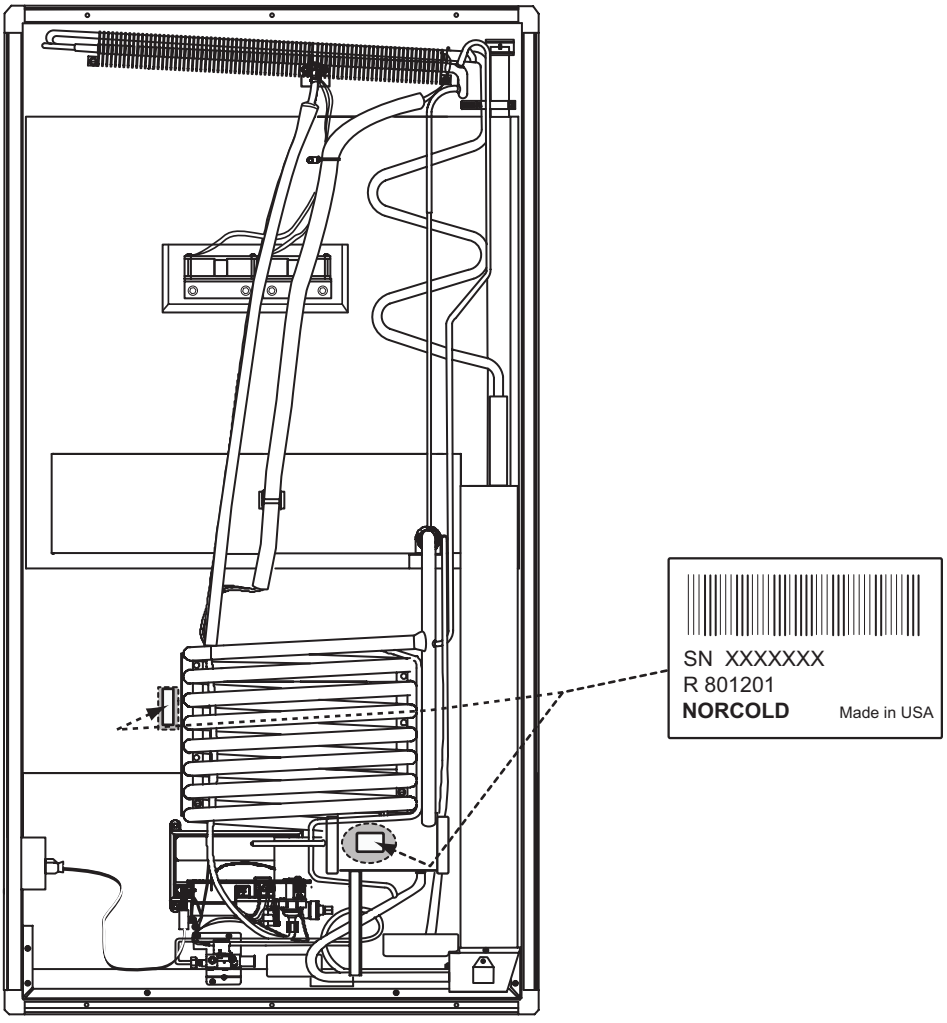

Figure 1-2. —Location of cooling system serial number label location.

Safety Awareness

It is not possible to anticipate all of the conceivable ways or conditions under which the refrigerator may be serviced or to provide warnings and cautions as to all of the possible hazards that may be present.

Standard safety precautions and equipment should be used when working on electrical circuits and handling toxic or flammable materials.

Safety goggles and other required protection should be used during any process that can cause material to become airborne, such as removing a leaking cooling unit or cleaning components.

Safety Symbols and Information

The following safety symbols and information text are used throughout this service manual.

⚠ WARNING

The WARNING symbol and text identify hazards or conditions, which if ignored while performing a task can cause serious injury, death, and/or extensive property damage.

⚠ CAUTION

The CAUTION symbol and text identify hazards or conditions, which if ignored while performing a task can cause injury, and/or property damage.

◀IMPORTANT▶

IMPORTANT labels are followed by information that MUST be followed to complete technical assistance, procedures or tests correctly.

NOTE

Provide additional information that assists with completing steps within a procedure or an entire procedure

Safety Review

General Safety

- Prevent child entrapment! Before disposing of the refrigerator, remove all doors and fasten all shelves with retainers.
- External components may have sharp corners and edges. Wear hand protection, such as cut resistant gloves, and exercise extreme care when handling the refrigerator.
- Make sure all hardware, such as hinges and fasteners (retaining screws, etc.), is properly fastened.

Electrical Safety

- Do not work on live electrical circuits! Turn off AC power and DC power sources before attempting to remove, service, or repair any of the refrigerator's electrical or electronic components.
- Do not over-fuse electrical circuits! Use the specified fuse and AWG wire size.
- Do not wet or spray liquids on or near electrical connections and electronic components! Most liquids, including leak detection solutions, are electrically conductive and create the potential for shock hazards, shorts, damage to electronic circuits, and/or ignite a fire.
- Do not use extension cords to supply AC power to the refrigerator!
- Do not remove the grounding prong from the refrigerator AC power cord!
- Do not use a two prong adapter to connect the refrigerator to the AC outlet!
- Do not modify, bypass, or eliminate any of the refrigerator's electrical components, electronic circuits, or propane gas system components, including AC and DC heaters.
- To prevent shock hazard, disconnect the AC power cord from the electrical outlet before attempting to remove the power board cover.
- Electrical connections and repairs to electrical components must comply with applicable codes.
- Use an anti-static grounding strap before attempting to handle, remove or install the power board.

Cooling System Safety

- Do not try to repair or recharge the cooling system! The cooling system is a sealed and pressurized. It is not rechargeable.
- Do not bend, drop, weld, drill, puncture, saw, or strike the cooling system! The cooling system is sealed and pressurized.
- Wear breathing protection and gloves when handling a leaking cooling system. The cooling system contains ammonia, hydrogen, and sodium chromate.

  ■ Ammonia can cause severe skin and eye burns.

  ■ Hydrogen is highly flammable and ignites and burns with intense flame.

  ■ Certain chromium compounds, such as sodium chromate, are carcinogenic.

LP Gas Safety

- Do not smoke, light fires, or create sparks when working on the propane gas system!
- Do not use an open flame for leak testing any of the propane gas system components. Propane gas is highly flammable and explosive!
- Always use two wrenches to loosen or tighten LP gas system fittings to prevent damaging components, piping, or fittings. Damaged components, piping, or fittings create the potential for gas leaks.
- Do not use leak test solutions containing ammonia or chlorine. Ammonia and chlorine corrode and break down brass and copper components.

SECTION 2 —SPECIFICATIONS

Internal Capacities

Freezer (2) volume ---------- 1.3 cu.ft. each
Fresh food compartment volume ----------8.0 cu.ft.

Controls

Type ---------- Electronic with built-in self diagnostic
ON/OFF/MODE/TEMP SET switches ----------Overlay assembly with flush-pushbuttons
Temperature setting range ---------- 1=cold to 9=coldest
Temperature sensing device ----------Thermistor

Off-level operating limits

Side-to-side---------- 3 degrees maximum at refrigerator
Front-to-back---------- 6 degrees maximum at refrigerator

DC power

Electronic controls voltage requirement---------- 10.5 to 15.4 VDC
DC fuse F1 (in power board---------- 5 A (tan color), automotive blade style

DC amperage draw @ nominal 12 VDC

Automatic ignition----------0.50 A
Divider heater ----------0.70 A
Flapper heater----------0.42 A
Lamp, fresh food compartment----------0.46 A
Gas valve ---------- 0.146 A
Fans (2) ----------0.400 A (per fan)
Valve, water dispenser ----------10 W @ 12 VDC
Heater, water dispenser models water line----------0.44 A
Heater, ice maker only water line----------1.3 A
Heater, modular ice maker and water dispenser ----------0.23 A

AC components

AC heaters----------2
Wattage, per heater ---------- 225 W @ 120 VAC
Heater resistance @ ambient temperature (per heater) ----------64 Ω
AUTO and AC manual mode operation voltage requirement---------- 108 to 132 VAC
AC fuse F2 (in power board)----------8 A, 1/4 in. x 1 1/4 in. AGC style, fast acting
Ice maker (IM models only) ---------- 180 W @ 115 VAC
Water valve, ice maker (IM and IMD models only)---------- 10 W @ 115 VAC

LP gas (propane)

Operating pressure----------10.5 to 11.5 in. w. c.
Btu/hr 7-slot burner / LP 18 orifice----------2400 Btu/hr @ 11 in. w. c
Flame sensing ----------Electronic through spark/sense electrode
Electrode tip-to-burner air gap---------- 1/8 to 3/16 in.

This page intentionally left blank

SECTION 3 — QUICK REFERENCE TROUBLE SHOOTING GUIDE

Problem	Probable Cause	Reference
Blank display- Refrigerator does not turn ON.	12 volt DC not connected to power board.	Page 12
	Loose / broken connector.	Page 12
	Power board F1 fuse open (blown).	Page 14
Poor cooling on AUTO AC or AC manual mode.	One AC heater failed open.	Page 20
	AC voltage less than 108 volt.	Page 28
Poor cooling on AUTO LP or manual LP mode.	Insufficient ventilation.	Page 33
	Gas pressure less than 10.5 In. w. c.	Page 39
	Dirty burner.	Page 44
	Flue clogged or dirty.	Page 62
	Heat deflector cap blocking flue exhaust.	Page 62
	Flue baffle missing.	Page 62
Poor cooling on AUTO AC, manual AC, AUTO LP, or manual LP modes.	Insufficient ventilation.	Page 33
	Fan thermostatic switch disconnected.	Page 48
	Fan(s) disconnected/malfunction.	Page 49
	Cooling system.	Page 61
	One AC heater failed open.	Page 61
Burner failed to ignite / reignite.	Dirty burner.	Page 44
	Spark/sense electrode wire has no continuity.	Page 31
	Spark/sense electrode gap not 1/8 to 3/16 in.	Page 7
"L1" "oP" fault	Off level operation.	Page 7
High temperature limit switch open.	Insufficient, obstructed or downdraft ventilation.	Page 33
	Heat deflector cap blocking flue opening.	Page 62
	Cooling system.	Page 61

Fault Code	Probable Cause	Reference
Blank Display Screen	12 volt DC not connected to power board.	Page 12
	Power board F1 fuse open (blown).	Page 12
	Optical display controls overlay malfunction.	Page 13
Flashing Temp Setting	Thermistor disconnected/open.	Page 18
	Thermistor wiring terminals corroded / broken	Page 19
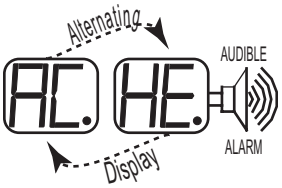	AC heaters not connected to power board.	Page 20
	AC heaters connected incorrectly to power board.	Page 20
	Both AC heaters failed open.	Page 20
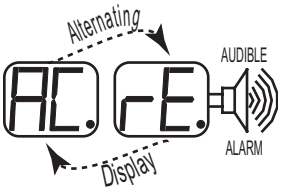	AC relay stuck closed.	Page 21
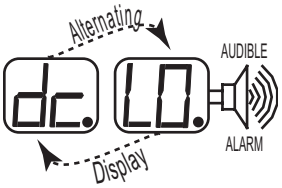	Less than 10.5 volts DC input to power board.	Page 22
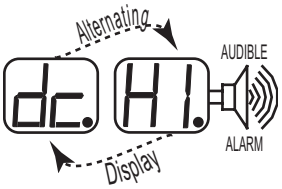	More than 15.4 volts DC input to power board.	Page 23
	Fresh food compartment door open or ajar for more than two (2) minutes.	Page 24

Fault Code	Probable Cause	Reference
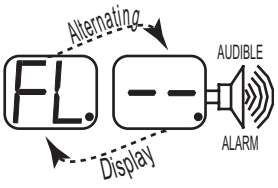	Flame present with gas off.	Page 26
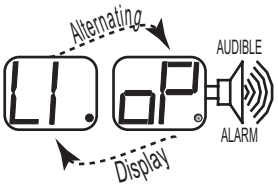	Open circuit high temperature limit switch.	Page 27
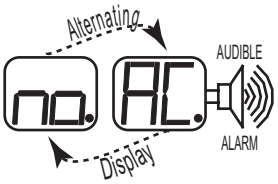	No AC voltage input to power board. AC cord unplugged at power board. Power board F2 fuse open (blown).	Page 29 Page 29 Page 29
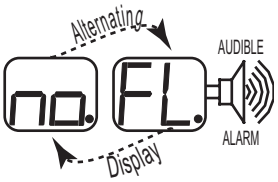	Burner failed to ignite or relight.	Page 30
	Flame sensing circuit malfunction.	Page 32

Troubleshooting Flowcharts

Blank display- Refrigerator does not turn ON.

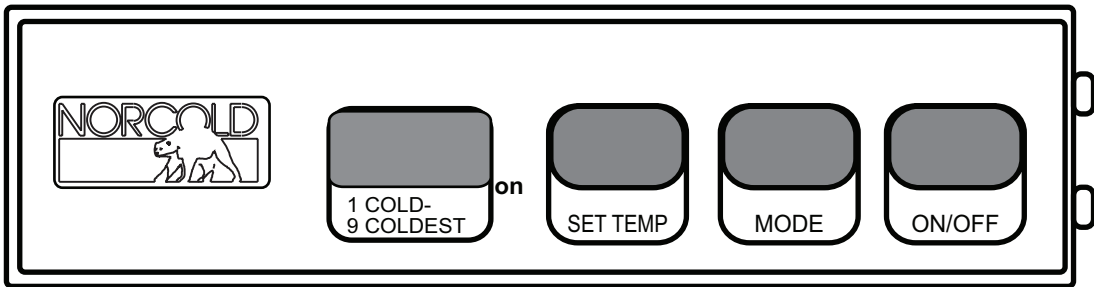

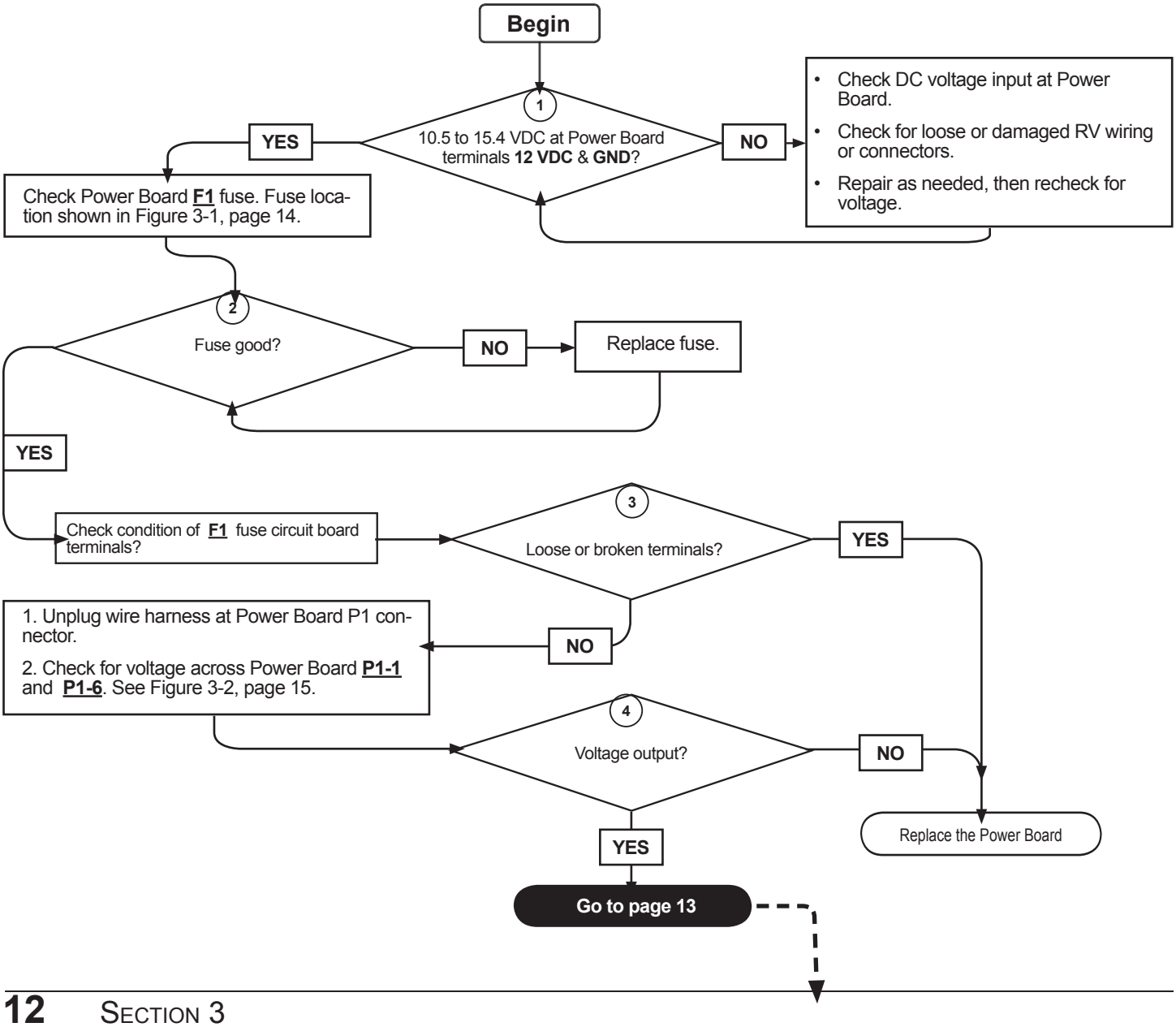

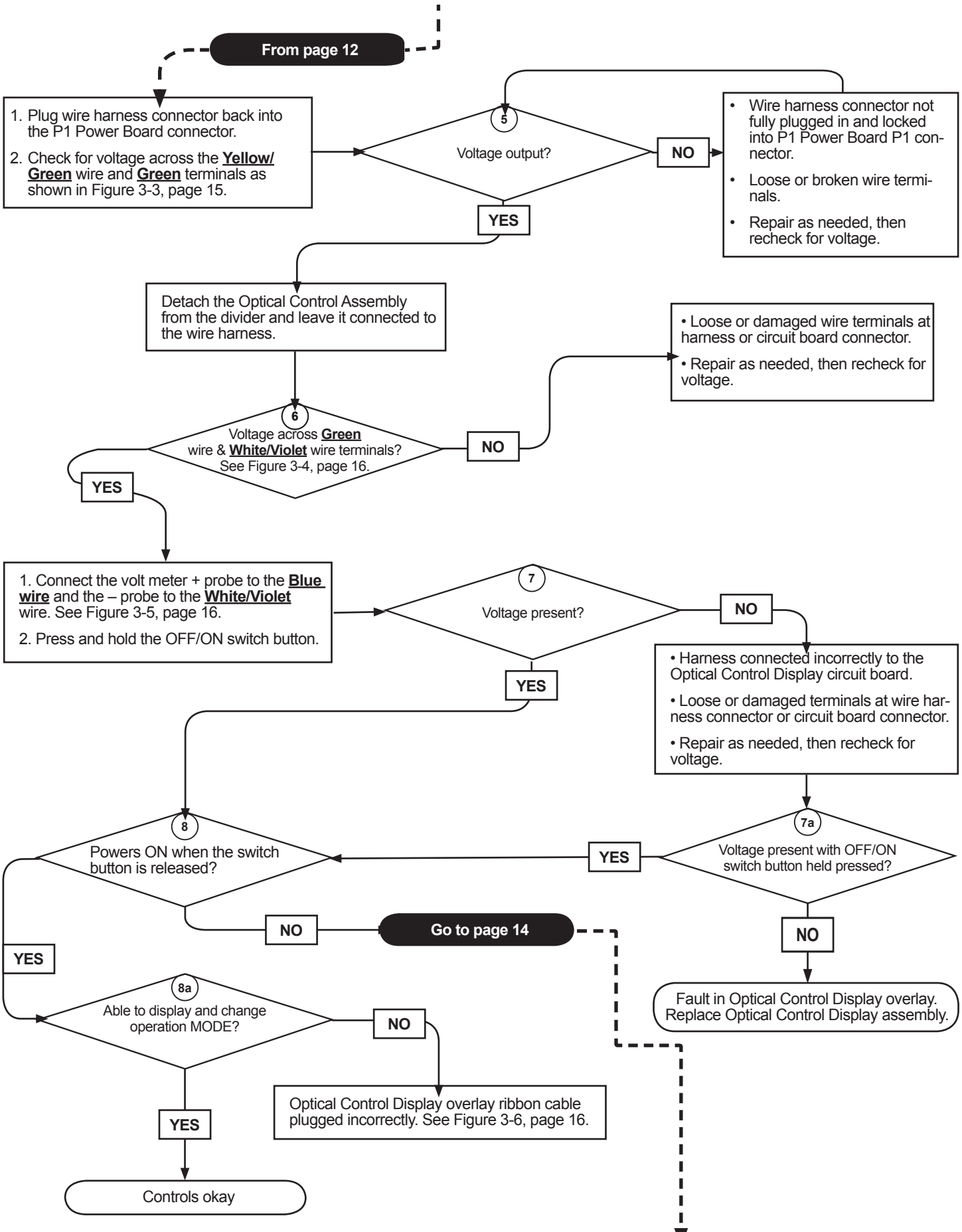
From page 12
1. Plug wire harness connector back into the P1 Power Board connector.
2. Check for voltage across the Yellow/ Green wire and Green terminals as shown in Figure 3-3, page 15.
5
Voltage output?
NO
• Wire harness connector not fully plugged in and locked into P1 Power Board P1 connector.
• Loose or broken wire terminals.
• Repair as needed, then recheck for voltage.
YES
Detach the Optical Control Assembly from the divider and leave it connected to the wire harness.
6
Voltage across Green wire & White/Violet wire terminals? See Figure 3-4, page 16.
NO
• Loose or damaged wire terminals at harness or circuit board connector.
• Repair as needed, then recheck for voltage.
YES
1. Connect the volt meter + probe to the Blue wire and the – probe to the White/Violet wire. See Figure 3-5, page 16.
2. Press and hold the OFF/ON switch button.
7
Voltage present?
NO
• Harness connected incorrectly to the Optical Control Display circuit board.
• Loose or damaged terminals at wire harness connector or circuit board connector.
• Repair as needed, then recheck for voltage.
YES
8
Powers ON when the switch button is released?
YES
7a
Voltage present with OFF/ON switch button held pressed?
NO
Go to page 14
NO
Fault in Optical Control Display overlay. Replace Optical Control Display assembly.
YES
8a
Able to display and change operation MODE?
NO
Optical Control Display overlay ribbon cable plugged incorrectly. See Figure 3-6, page 16.
YES
Controls okay

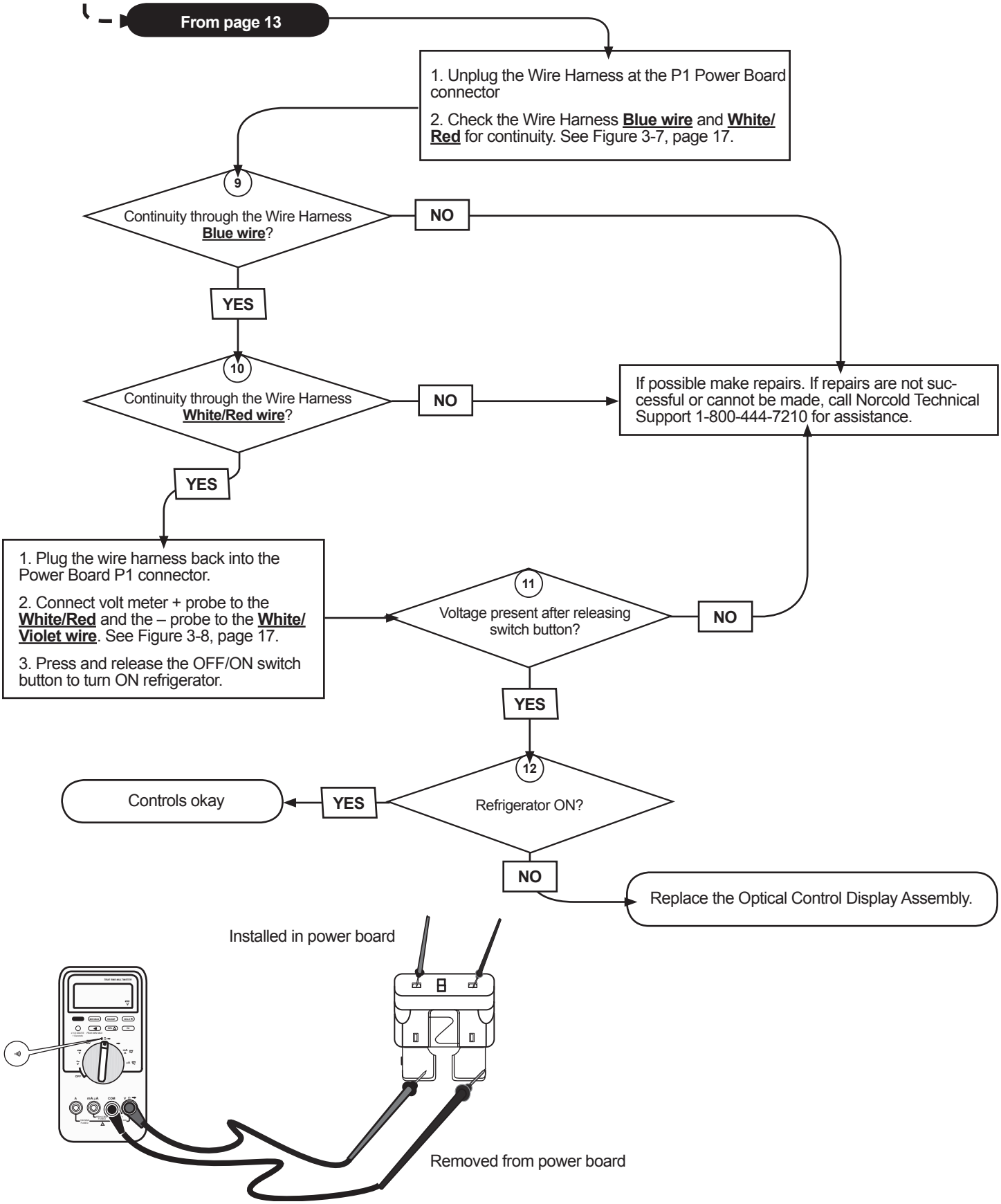

Figure 3-1. —Checking continuity of power board F1 fuse.

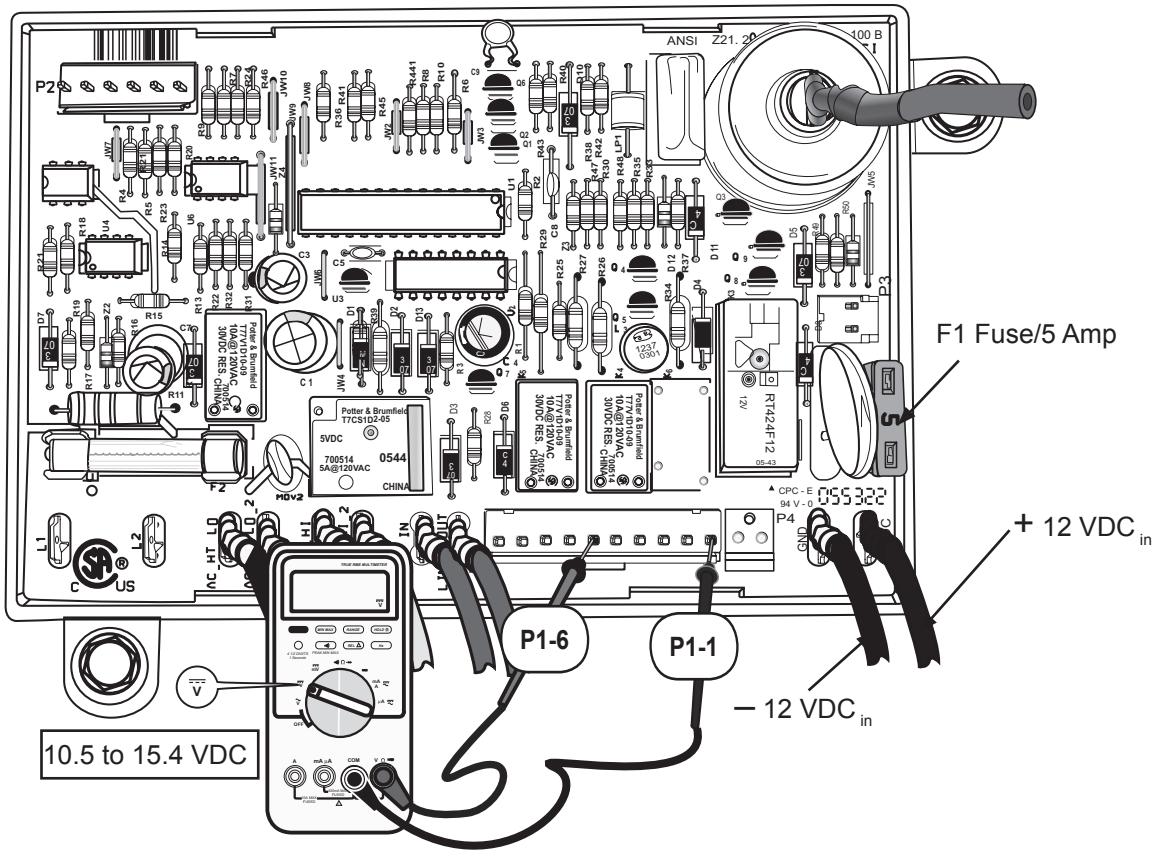

Figure 3-2. —Measuring DC voltage across P1-1 and P1-6 with wire harness disconnected.

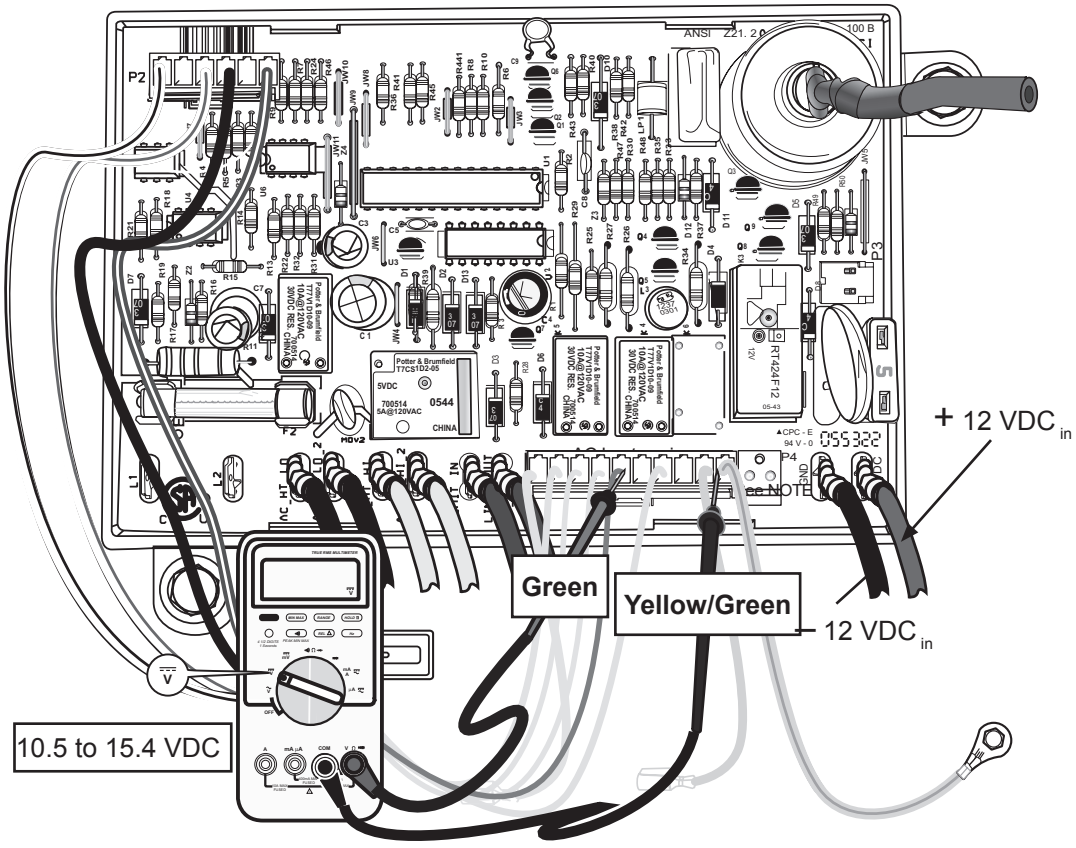

Figure 3-3. —Measuring DC voltage across Yellow/Green and Green wires - all models.

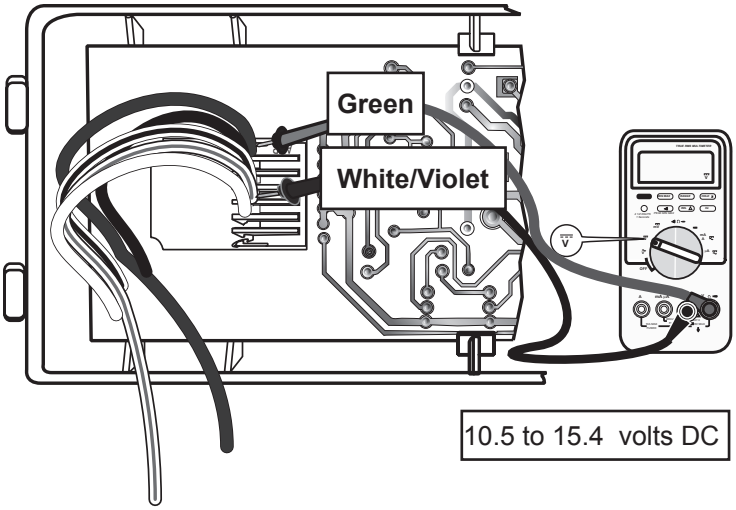

Figure 3-4. —Measuring DC voltage across White/Violet wire and Green wire at the optical controls display assembly circuit board connector.

Optical Control Display Assembly—Back View

◀IMPORTANT▶

Voltage is only present when the ON/OFF switch button is held pressed while turning ON the refrigerator.

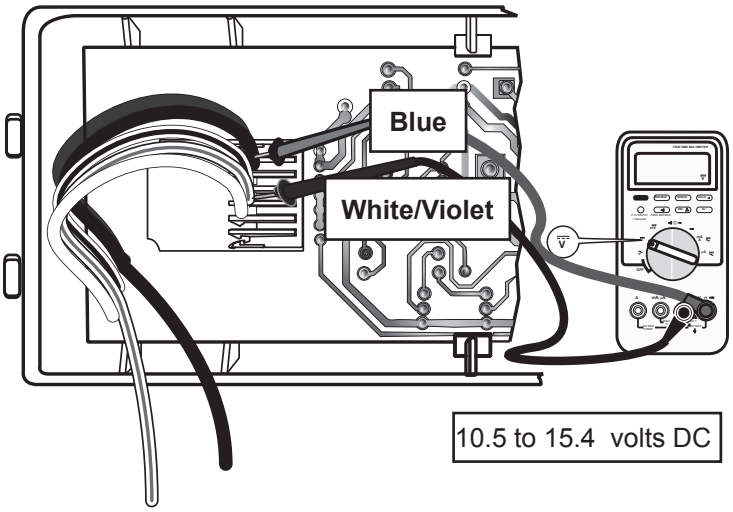

Figure 3-5. —Measuring DC voltage across White/Violet wire and Blue wire at the optical control display assembly circuit board connector.

Ribbon cable connector
1. Contacts face out and solid surface against the circuit board surface.
2. All pins must engage the connector.

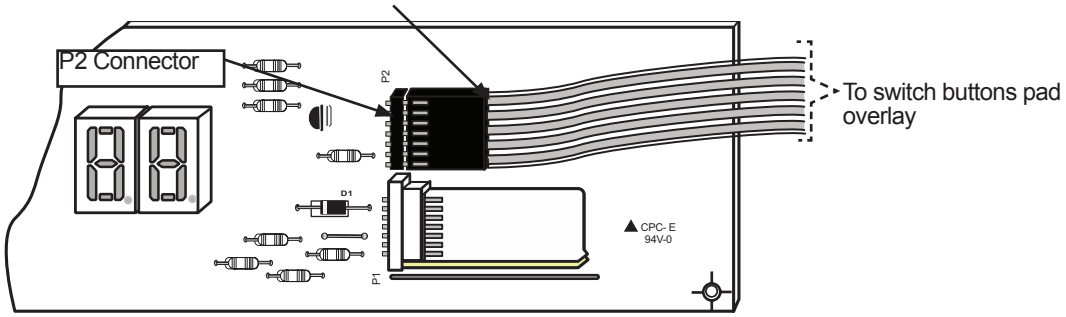

Figure 3-6. —Overlay ribbon connection at Optical Control Display circuit board P2 connector.

To check White/Red wire and Blue wire for continuity:

1. Disconnect P1 and P2 from Power Board.
2. Disconnect Optical Control Assembly P1 from circuit board.
3. Jump White/Red wire and Blue wire at Power Board P1 and P2 connector.
4. Connect ohm meter to White/Red wire and Blue wire contacts at Optical Control Display wire harness connector.

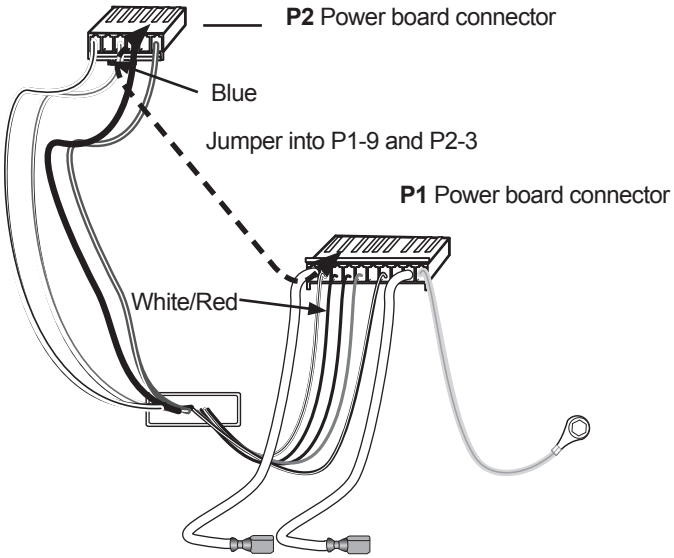

Figure 3-7. —Location of wire harness White/Red wire and Blue wire in P1 Optical Control Display wire harness plug and Power Board P1 and P2 Connectors.

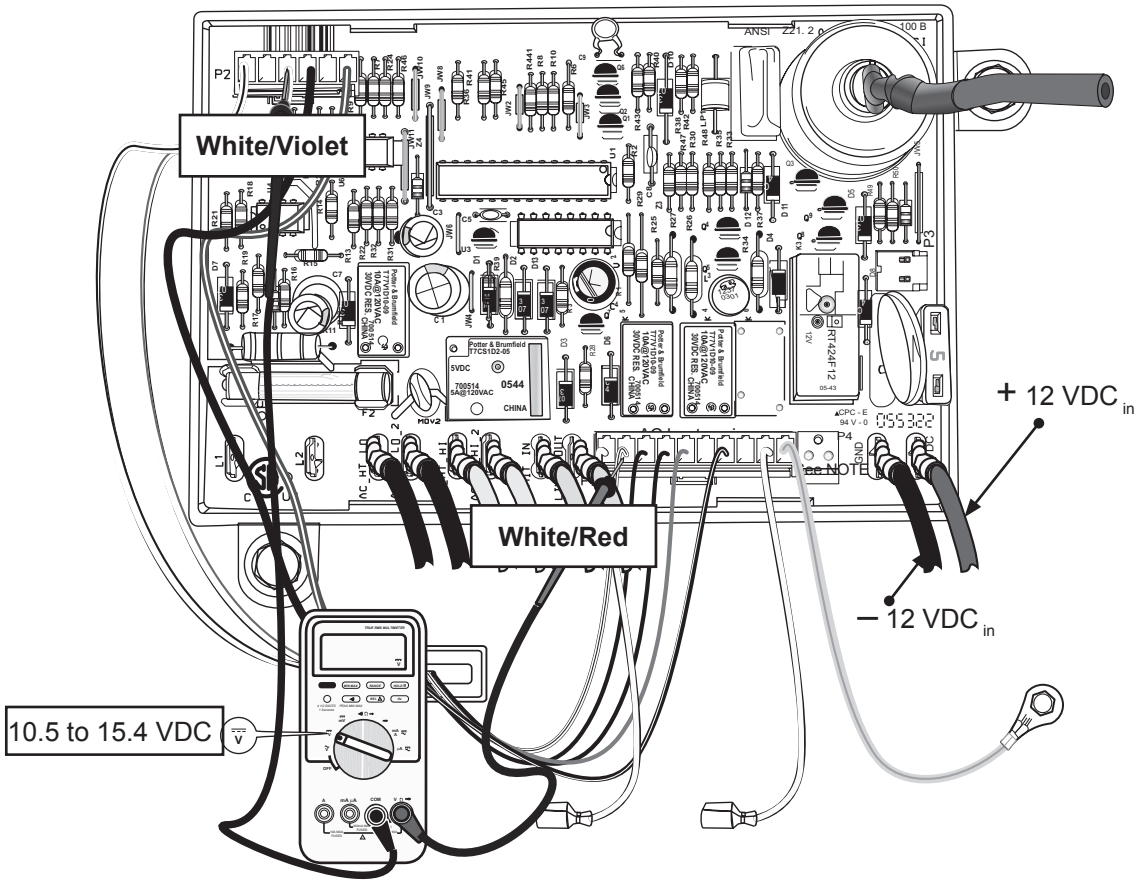

Figure 3-8. —Measuring DC voltage across the White/Red (+) and White/Violet (–) wire.

Thermistor Circuit Open or Shorted —Backup Operating System (BOS)

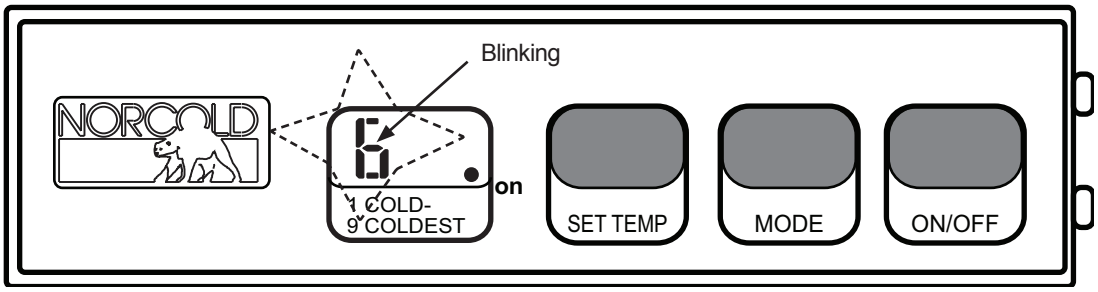

Open or shorted thermistor

This fault is indicated by a blinking temperature setting. It may be set by:

- Intentionally disconnecting the thermistor from the circuit.
- An open thermistor (O.L. indication).
- A shorted thermistor (0 resistance).
- Broken thermistor wire leads.
- Corroded or broken thermistor connectors.

The fault causes the temperature setting number to blink anytime the TEMP SET switch button is pressed. After ten seconds the blinking setting turns off.

Backup operating system (BOS)

BOS is a duty cycle designed to maintain cooling anytime the thermistor is sensed open or shorted.

When the refrigerator is operating in BOS, changing the temperature setting on the display increases the cooling cycle. For example, changing the setting from 5 to 6 increases cooling cycle time. Lowering the setting from 5 to 4 decreases cooling cycle time.

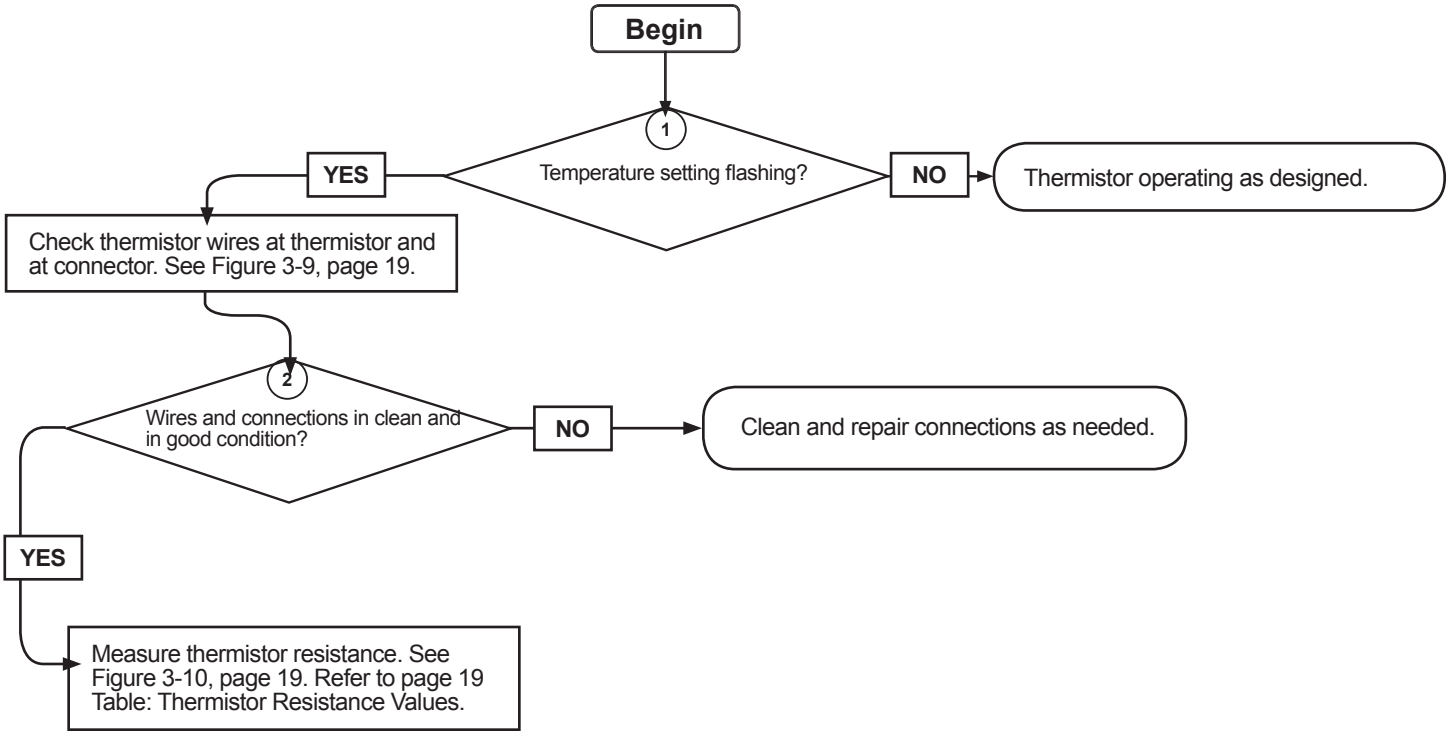

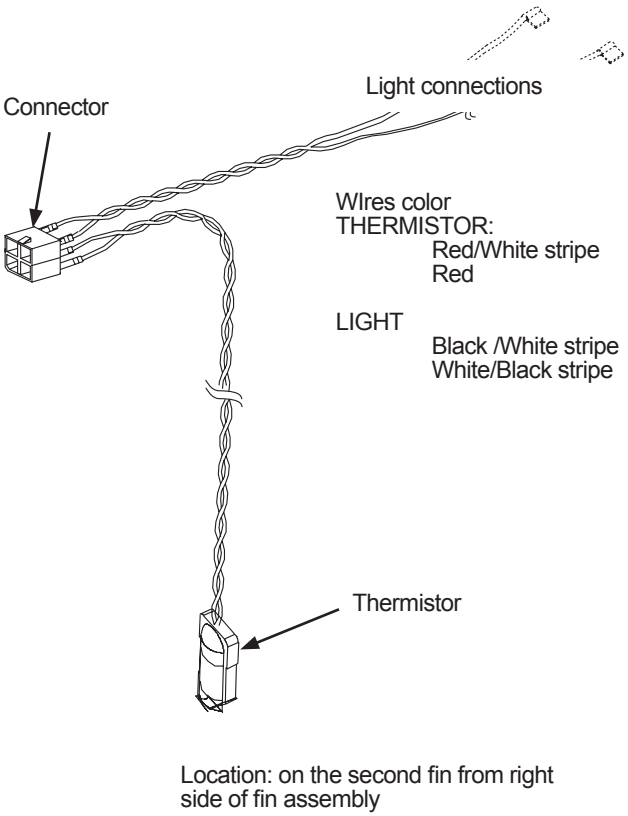

Figure 3-9. —Thermistor / light wires assembly.

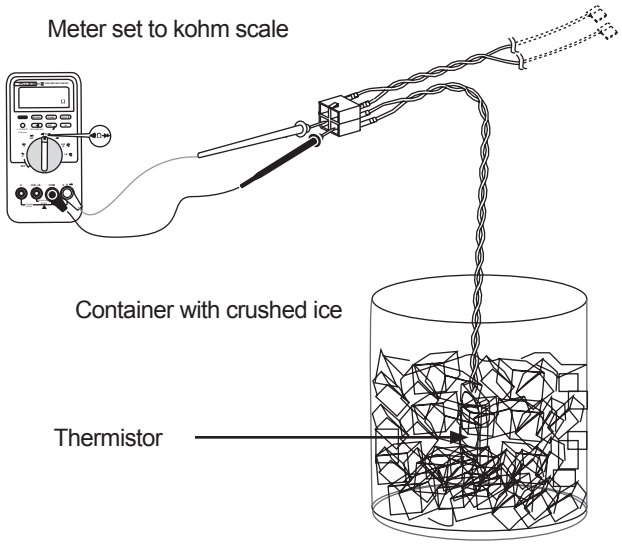

Figure 3-10. —Checking thermistor resistance.

Checking thermistor resistance in ice bath

1. Disconnect the thermistor from the circuit and fin assembly. See Figure 3-9.
2. Connect a resistance meter as shown.
3. Record reading with thermistor at ambient temperature.
4. Put the thermistor in small container filled with crushed ice. See Figure 3-10.
5. Compare thermistor resistance changes to temperature values shown in Table. Thermistor Temperature to Resistance Values.

Temperature		Resistance
°C	°F	kohms
29	85	8.1-9.0
27	80	9.1-10.0
24	75	10.1-11.0
21	70	11.1-12.0
16	60	12.1-13.0
10	50	15.5-16.5
4	40	22.5-23.5
2	35	24.5-25.5
0.5	33	28.5-29.5
0.0	32	30.0-32.0

Table. Thermistor Temperature/Resistance Values.

AC HE Code— AC Heaters Failed Open

◀IMPORTANT▶

The AC HE fault is recorded in either the AUTO or Manual AC mode. The following may apply.

AUTO MODE: When AC heaters current input falls below 0.5 amperes and AUTO LP has locked out, the fault is set and recorded to non volatile memory approximately 25 seconds after it occurs, providing there is a call for cooling.

AC manual mode: When AC heater current input falls below 0.5 amperes, the fault is set and recorded to non volatile memory approximately 25 seconds it occurs, provided there is a call for cooling

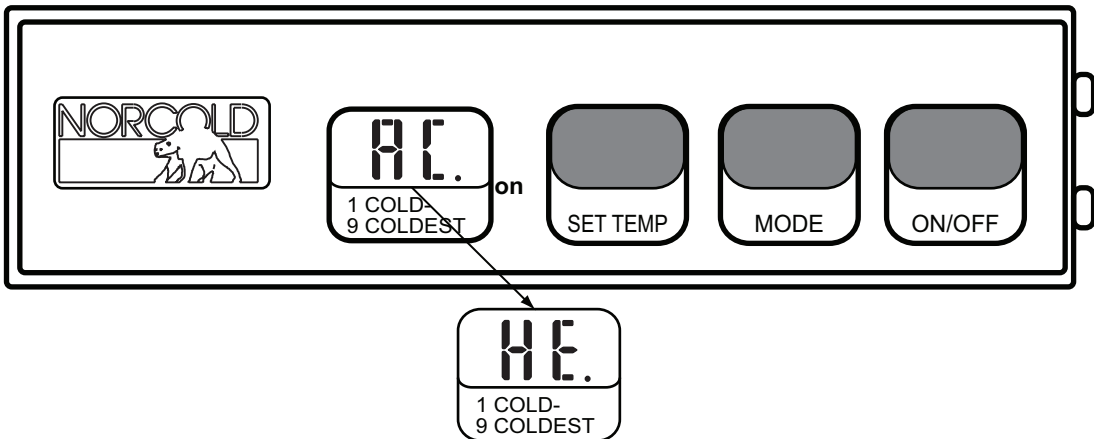

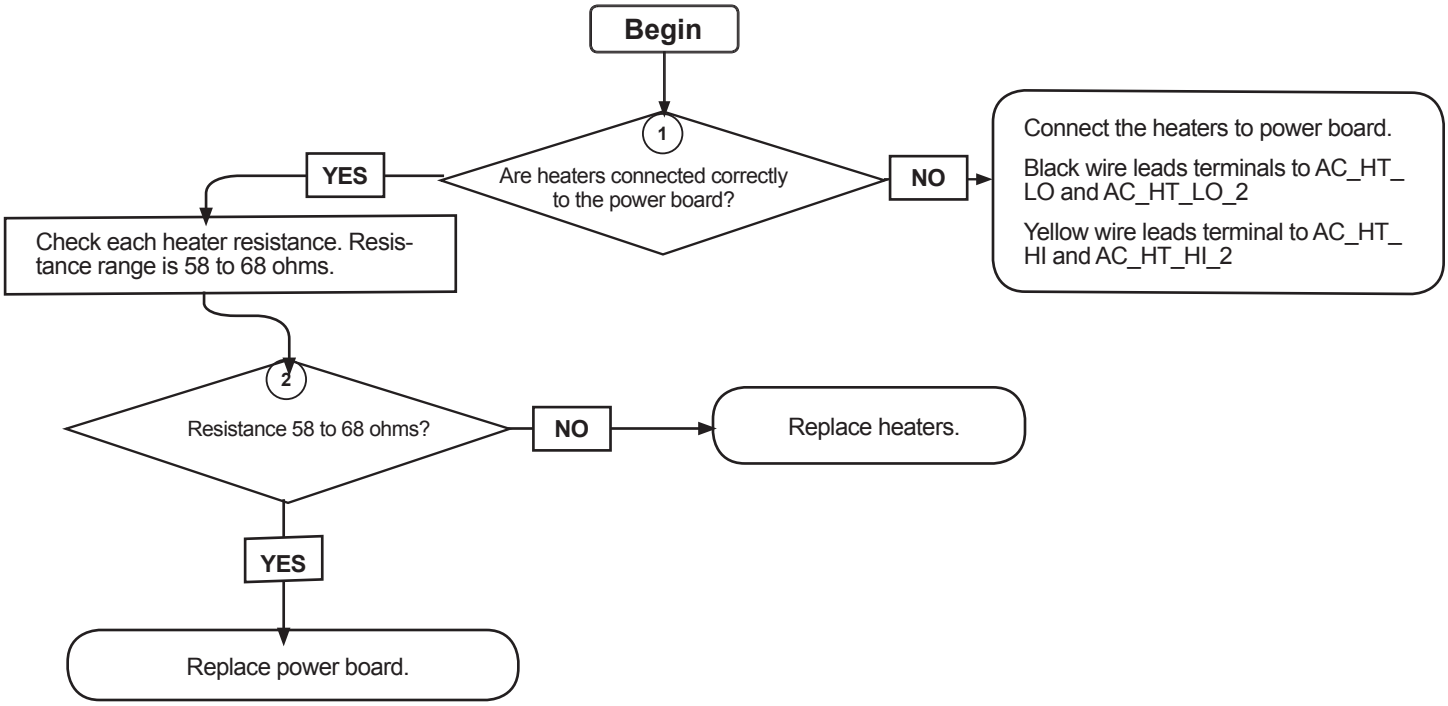

AC rE Code—AC Relay Stuck Closed

◀IMPORTANT▶

The AC rE fault is recorded in all operating modes any time AC heater current is sensed on when it is supposed to be off. The AC rE code displays and is recorded in non volatile memory approximately 25 seconds after the fault occurs.

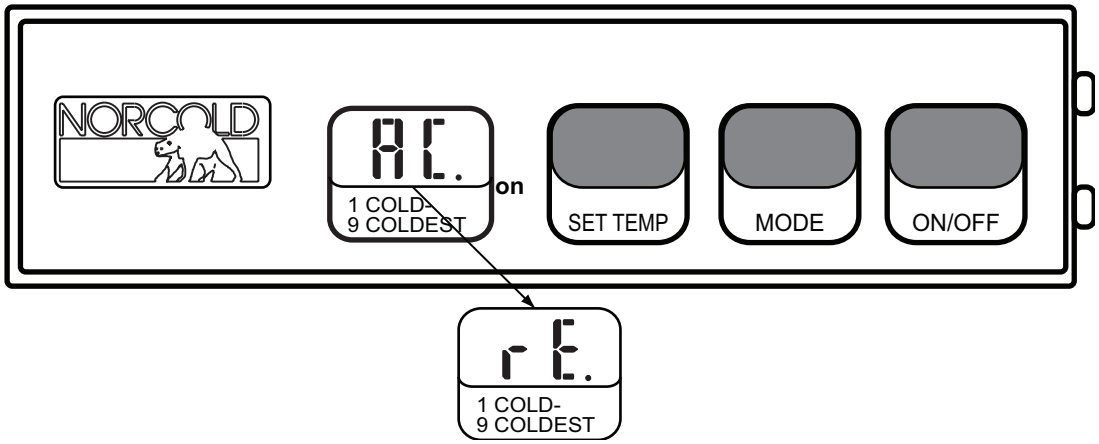

Power board AC heater relay contacts stuck in the closed position. AC current to heaters is being sensed by the controls

→ Replace power board.

dc LO Fault Code—DC Voltage Low

◀IMPORTANT▶

The dc LO fault is recorded in all operating modes any time DC voltage input falls below 10.5 volts DC.

The dc LO code displays and is recorded in non volatile memory approximately 25 seconds after the fault occurs.

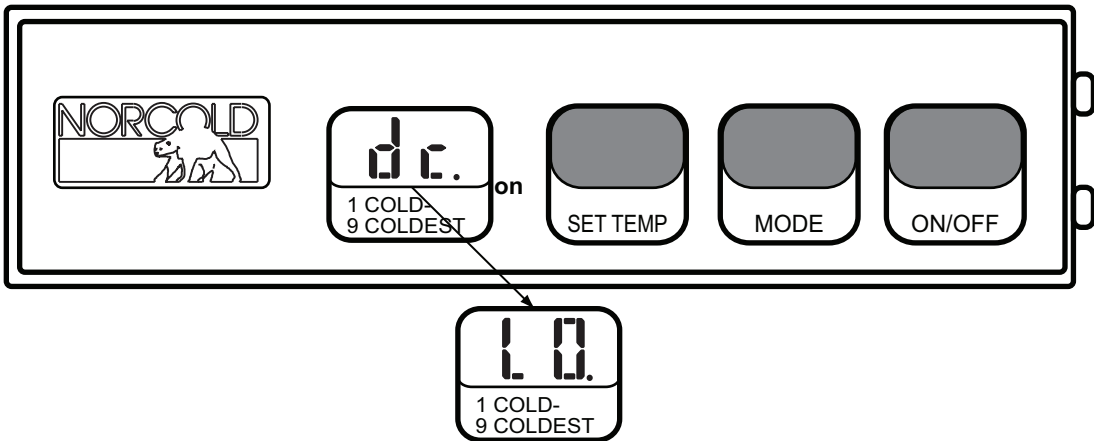

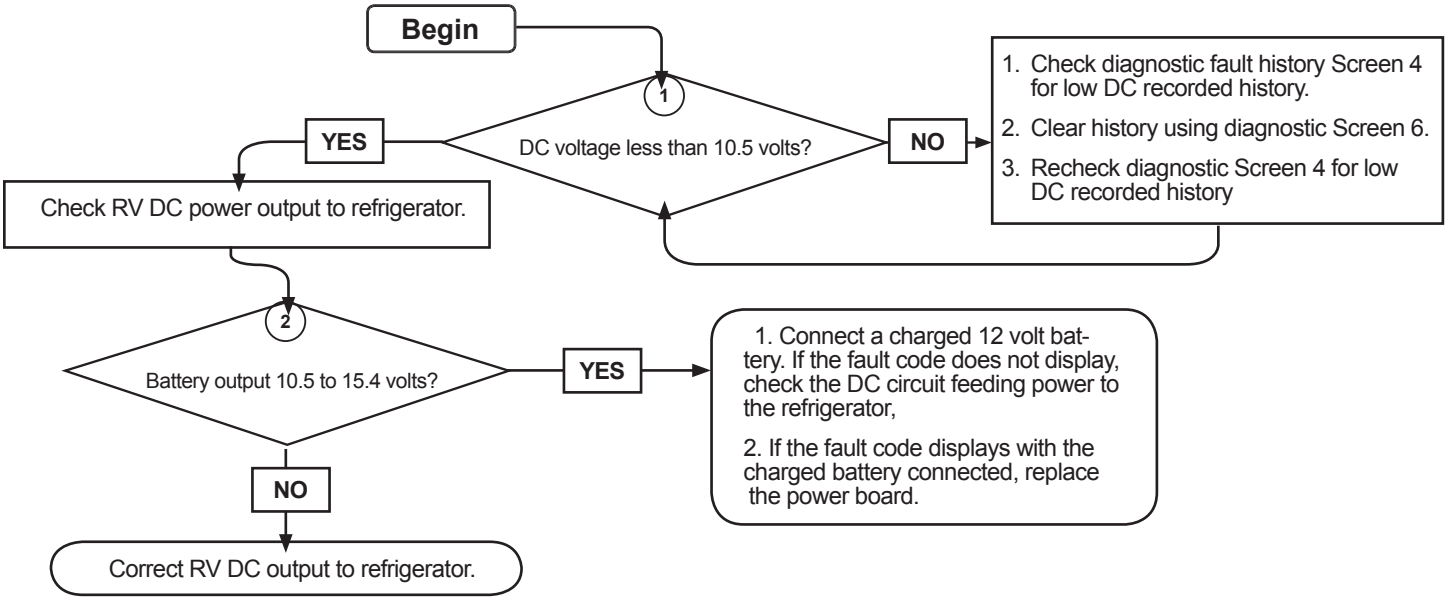

dc HI Fault Code—DC Voltage Low

◀IMPORTANT▶

The dc HI fault is recorded in all operating modes any time DC voltage input is above 15.4 volts.

The dc HI code displays and is recorded in non volatile memory approximately 25 seconds after the fault occurs.

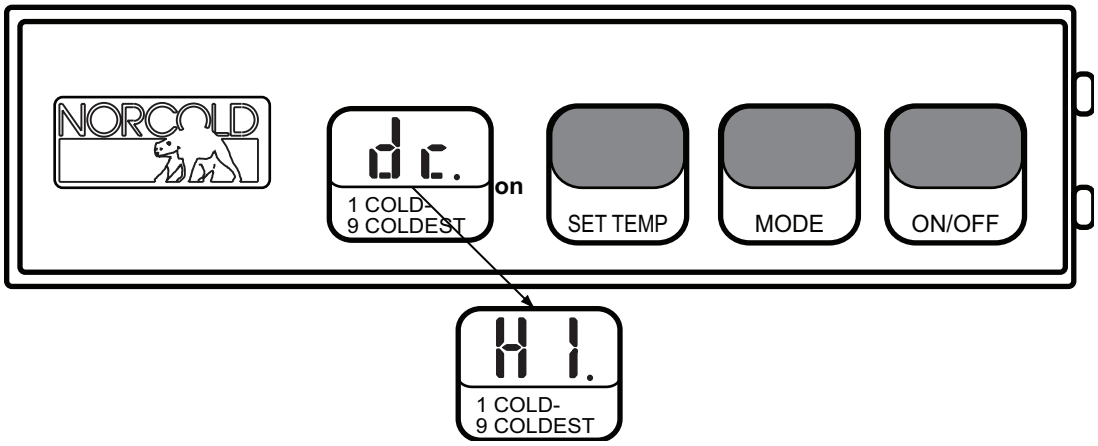

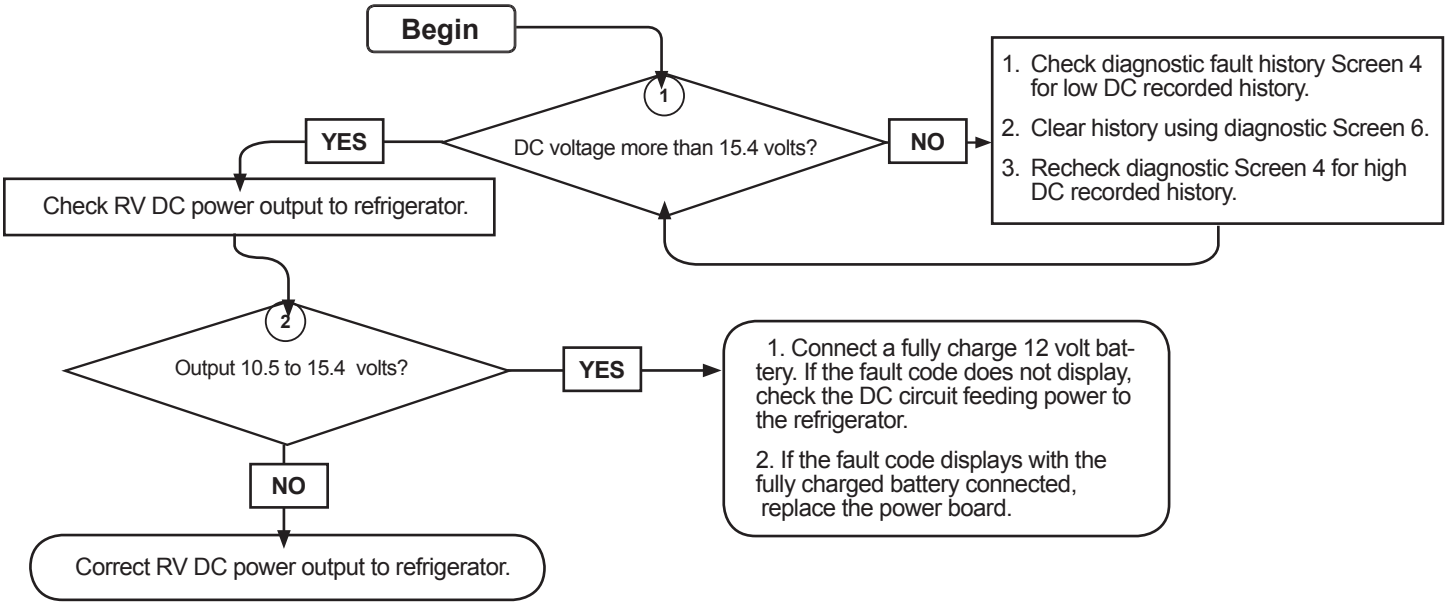

dr Code—Door sensed ajar or open for more than 2 minutes

◀IMPORTANT▶

The dr fault is recorded in all operating modes any time one or both fresh food compartment door has been sensed open for two minutes. The controls turn the light off after the two minute period.

The dr code displays and is recorded in non volatile memory approximately 25 seconds after the fault occurs.

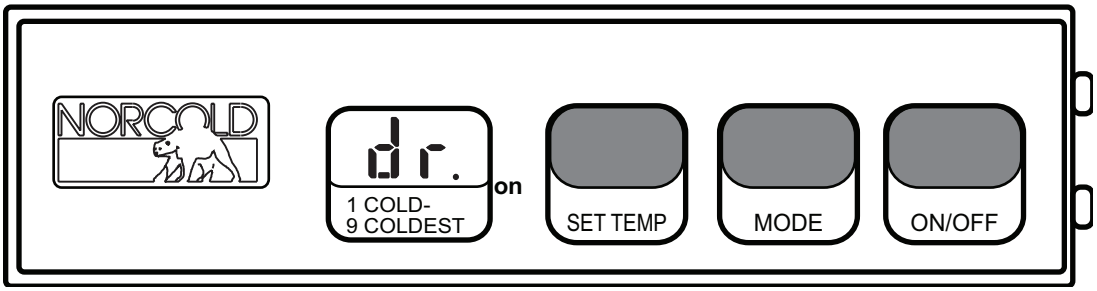

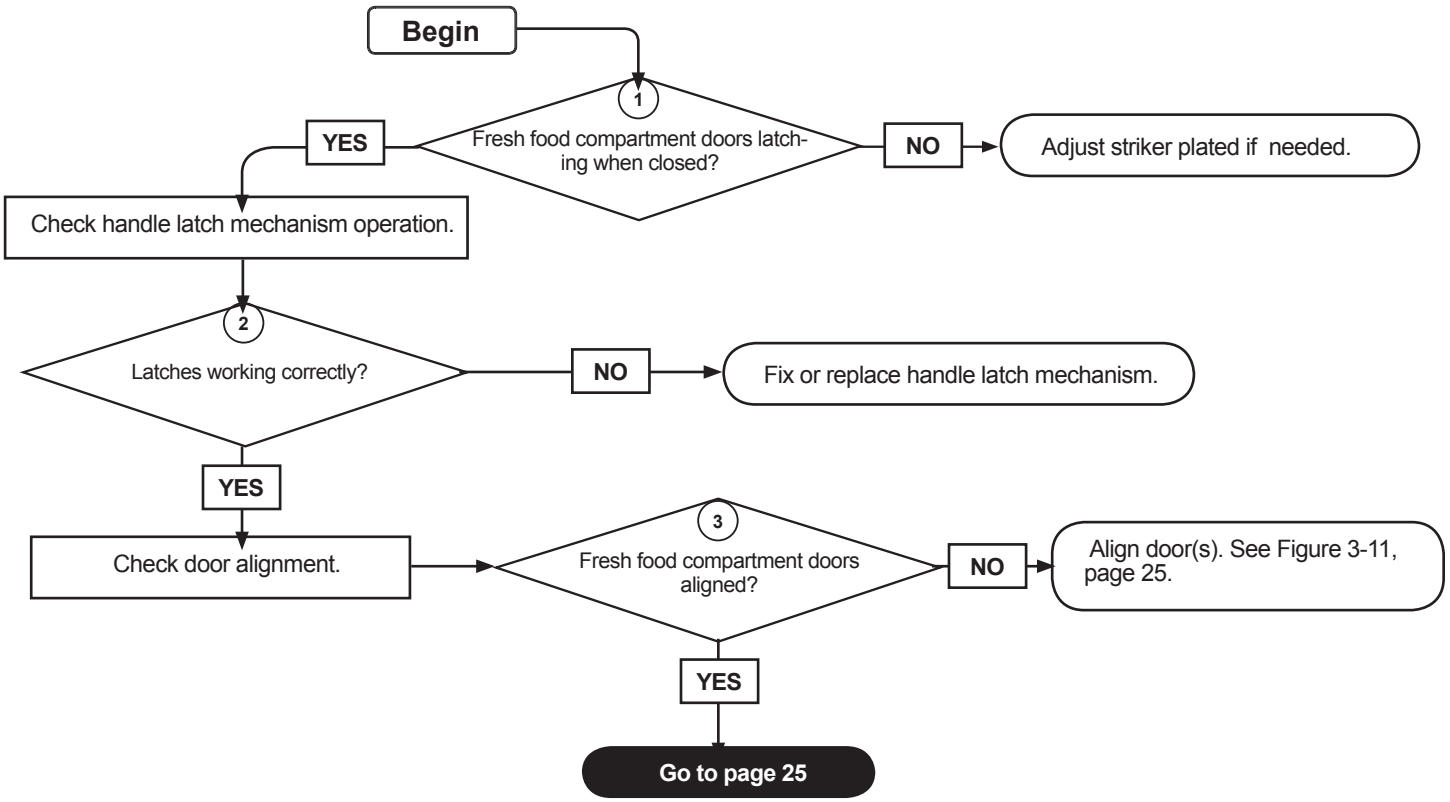

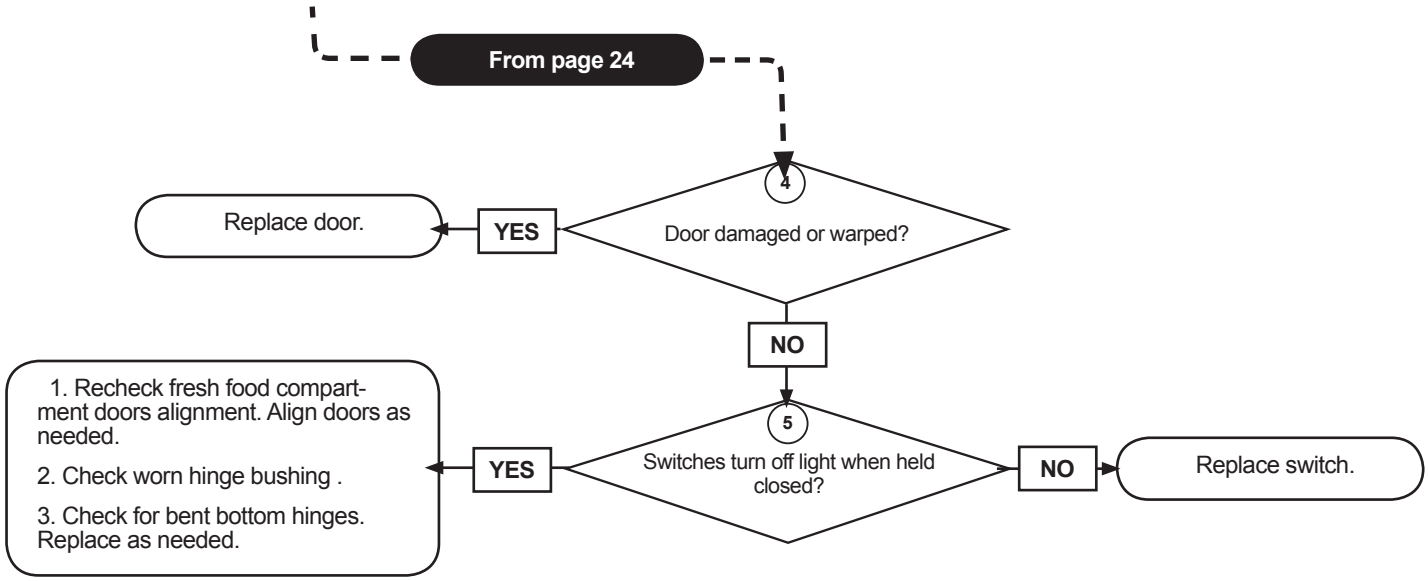

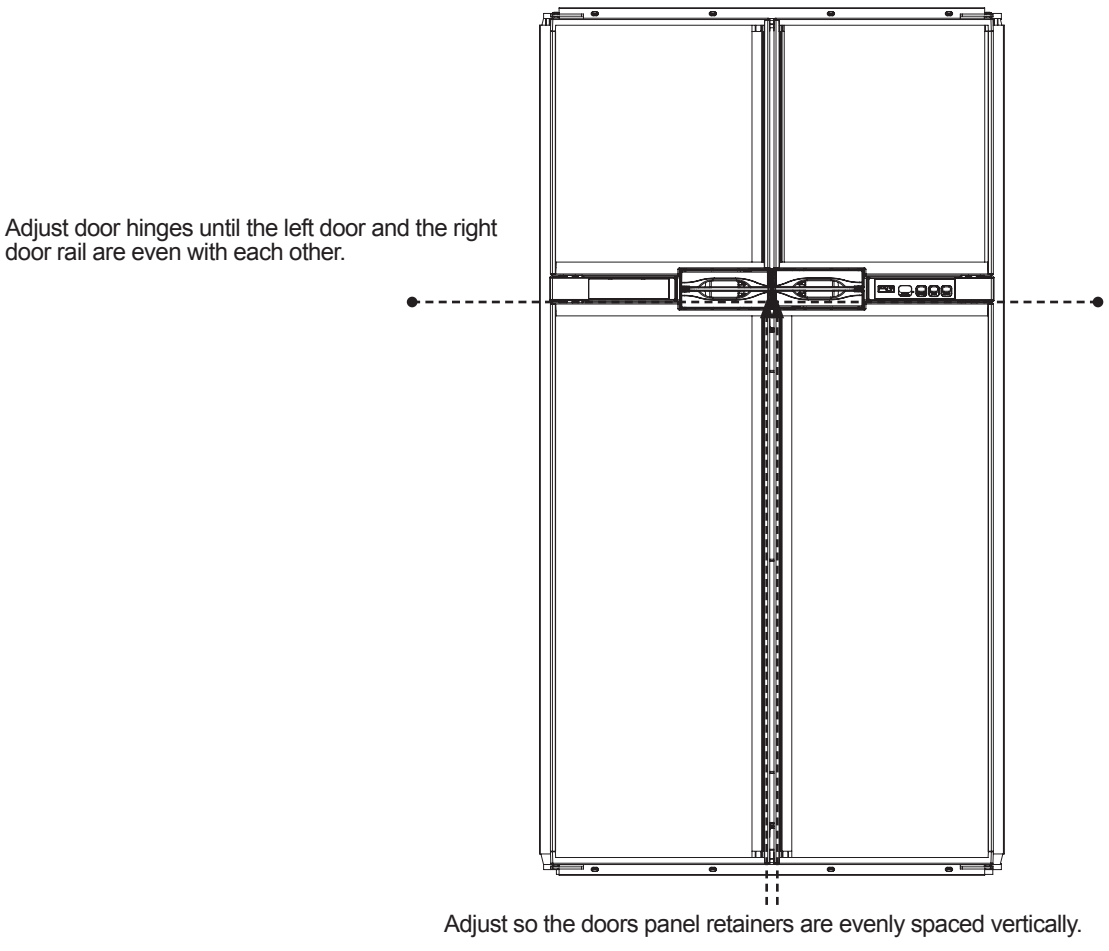

Figure 3-11. —Fresh food compartment door adjustment criteria.

FL – – Code —Flame Present with Gas Off

◀IMPORTANT▶

The FL -- fault is recorded in all operating modes any time a flame is sensed at the burner when is not supposed to be lit. The FL -- fault displays and is recorded in non volatile memory approximately 25 seconds after it occurs.

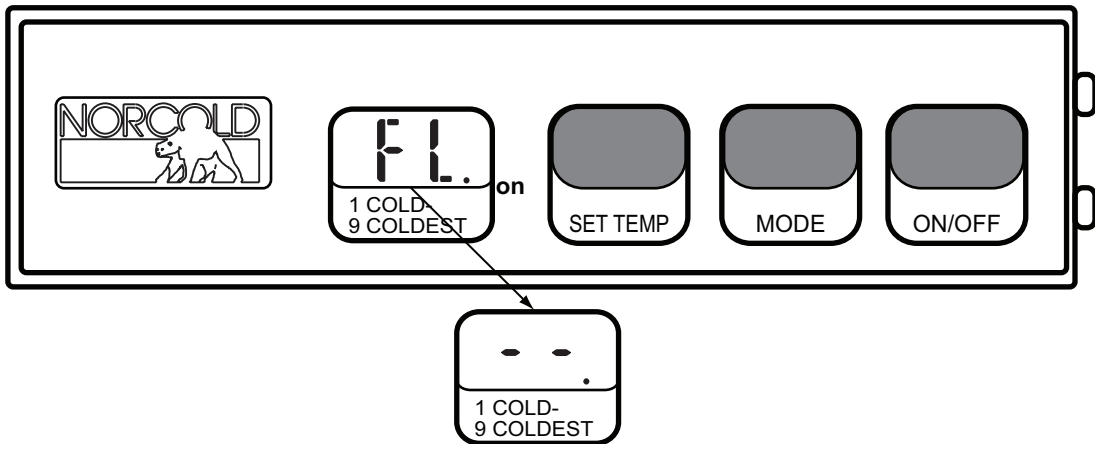

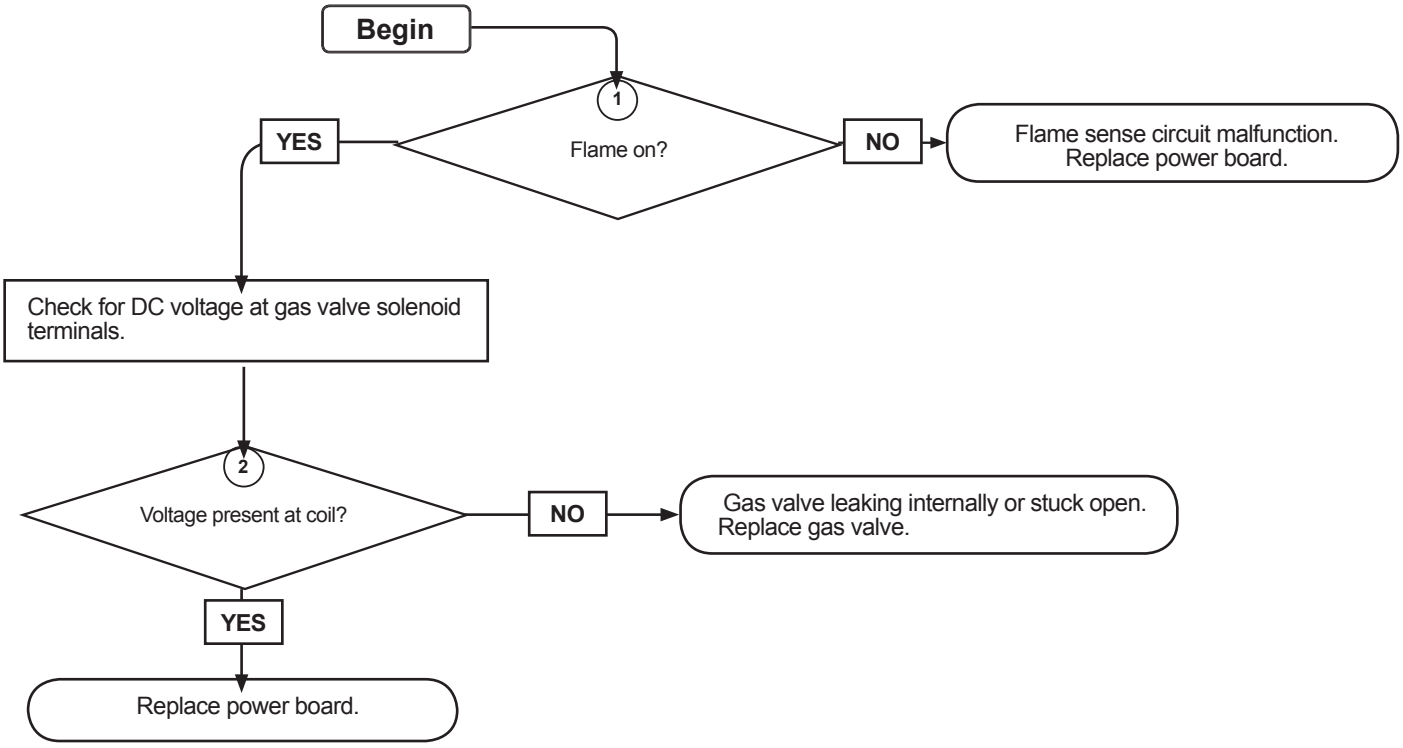

L1 oP Code—Open High Temperature Limit Switch

◀IMPORTANT▶

The L1 oP indicates the high temperature limit switch is open or disconnected. The switch is located on the cooling system canister. It is designed to open when the cooling system boiler temperature exceeds 378 degrees Fahrenheit (192.2 degrees Celsius).

On units with non-resettable switch, replace the switch with a resettable switch. On units with resettable switches, reset the switch. In both cases troubleshoot for the L1 oP fault cause.

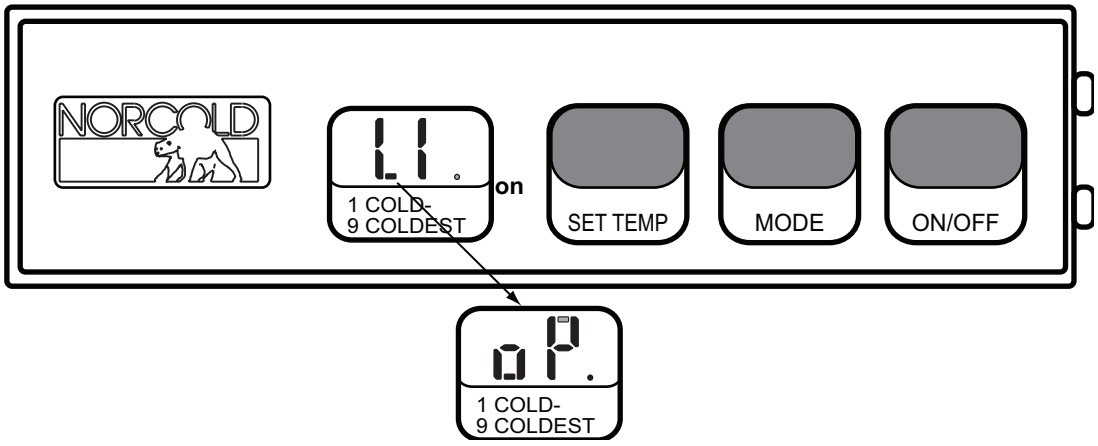

◀IMPORTANT▶

Make sure refrigerator is operating within level requirements.

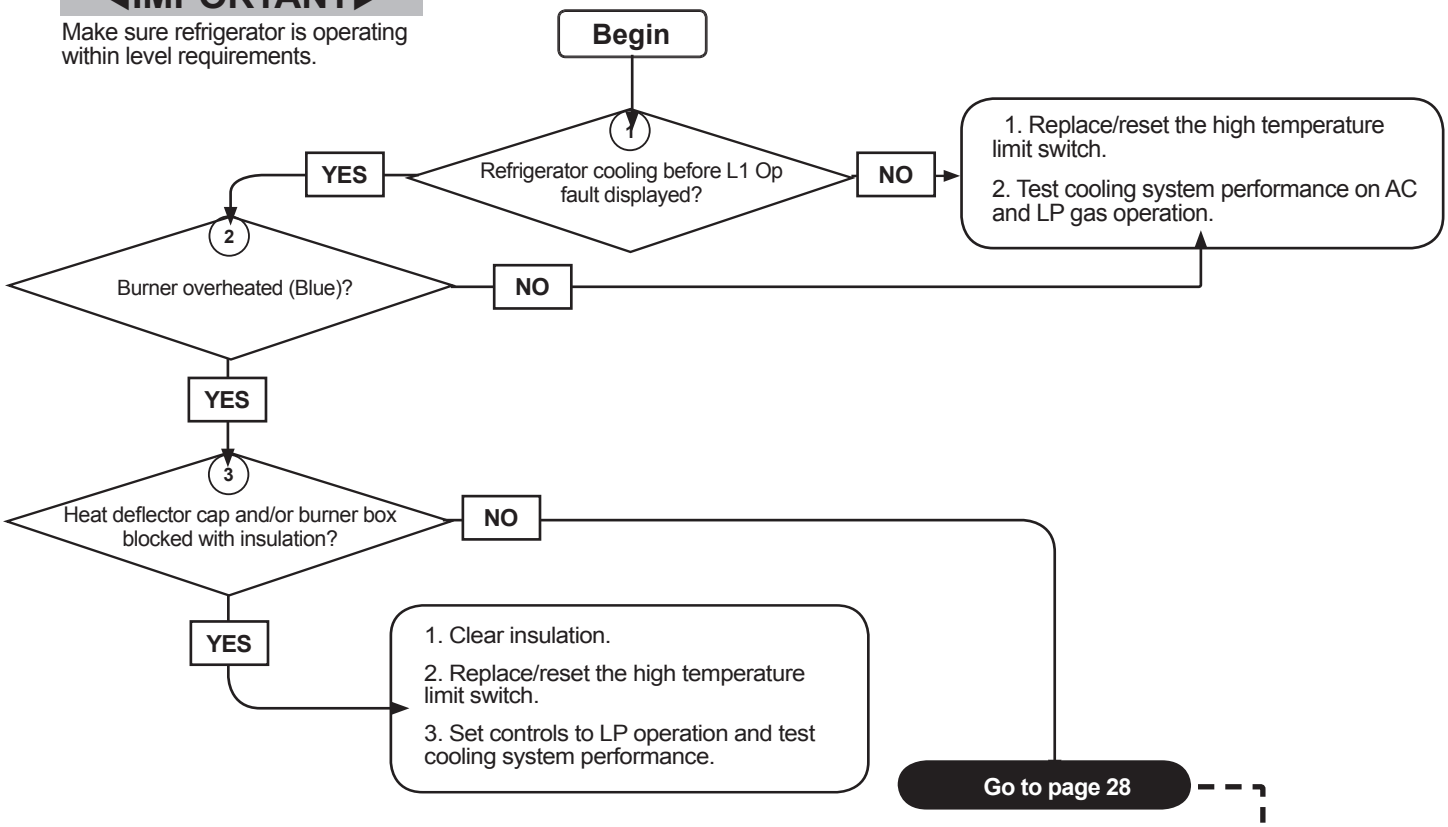

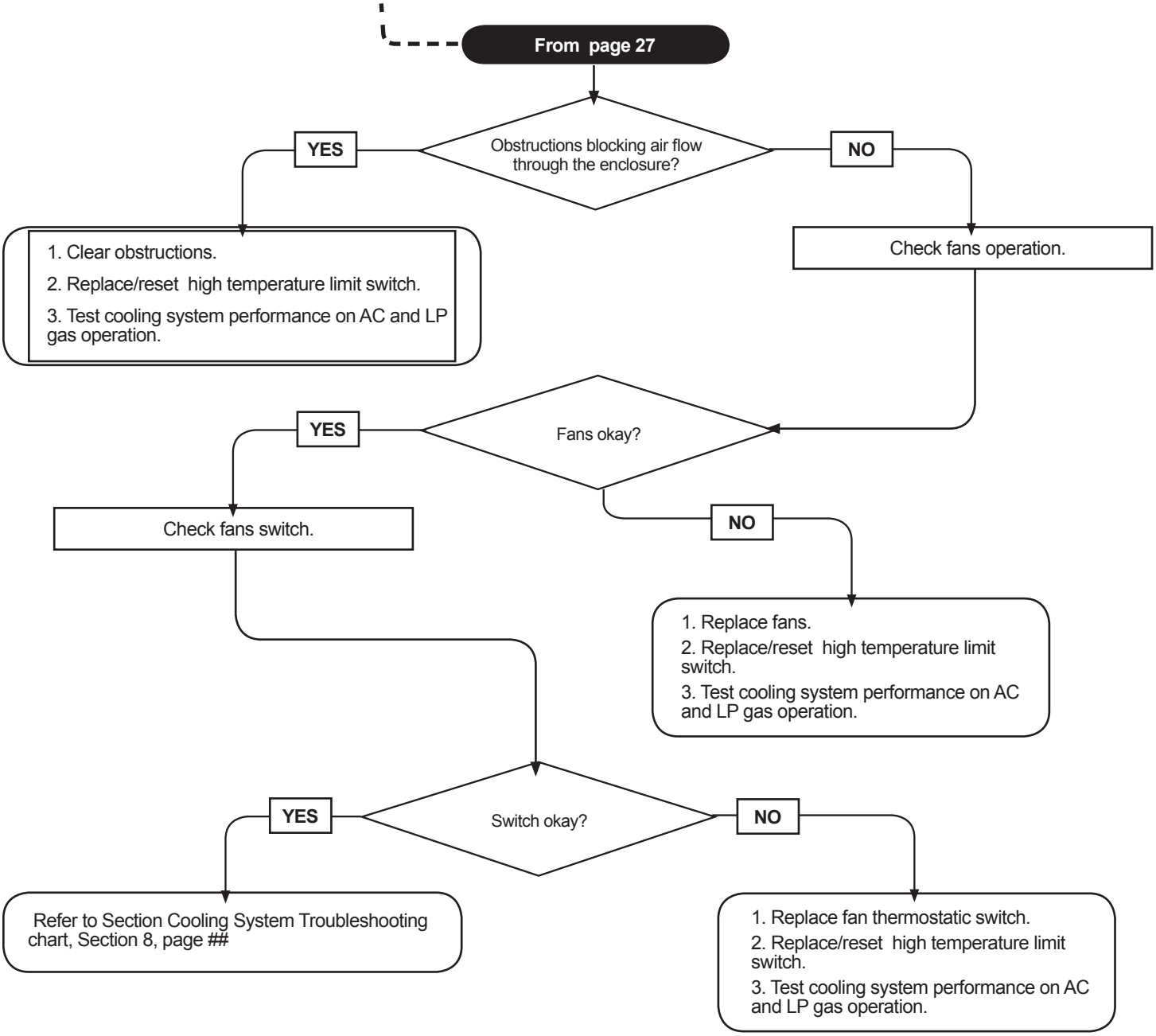
From page 27
Obstructions blocking air flow through the enclosure?
YES
NO
1. Clear obstructions.
2. Replace/reset high temperature limit switch.
3. Test cooling system performance on AC and LP gas operation.
Check fans operation.
Fans okay?
YES
NO
Check fans switch.
1. Replace fans.
2. Replace/reset high temperature limit switch.
3. Test cooling system performance on AC and LP gas operation.
Switch okay?
YES
NO
Refer to Section Cooling System Troubleshooting chart, Section 8, page ##
1. Replace fan thermostatic switch.
2. Replace/reset high temperature limit switch.
3. Test cooling system performance on AC and LP gas operation.

no AC Code—AC Mode Selected/ AC Voltage Not Available

◀IMPORTANT▶

The no AC fault is recorded in either the AUTO or AC manual mode. For the fault to occur in the Auto AC Mode AC voltage has to fall below 85 volts with LP gas operation locked out by the controls. This fault is recorded approximately 25 seconds later provided there is a call for cooling.

For the fault to occur in AC Manual Mode, AC voltage input has to fall below 85 volts with the controls calling for cooling. The alarm sounds and the fault displays approximately 25 seconds later.

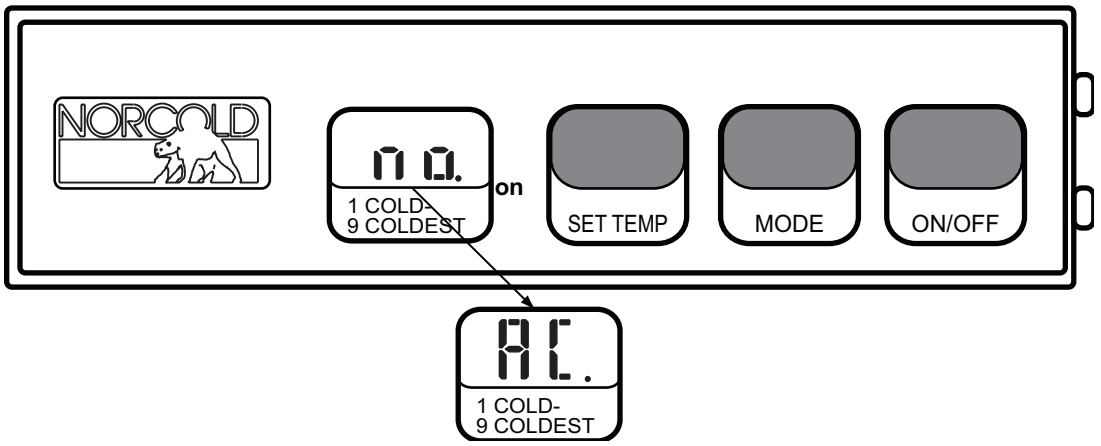

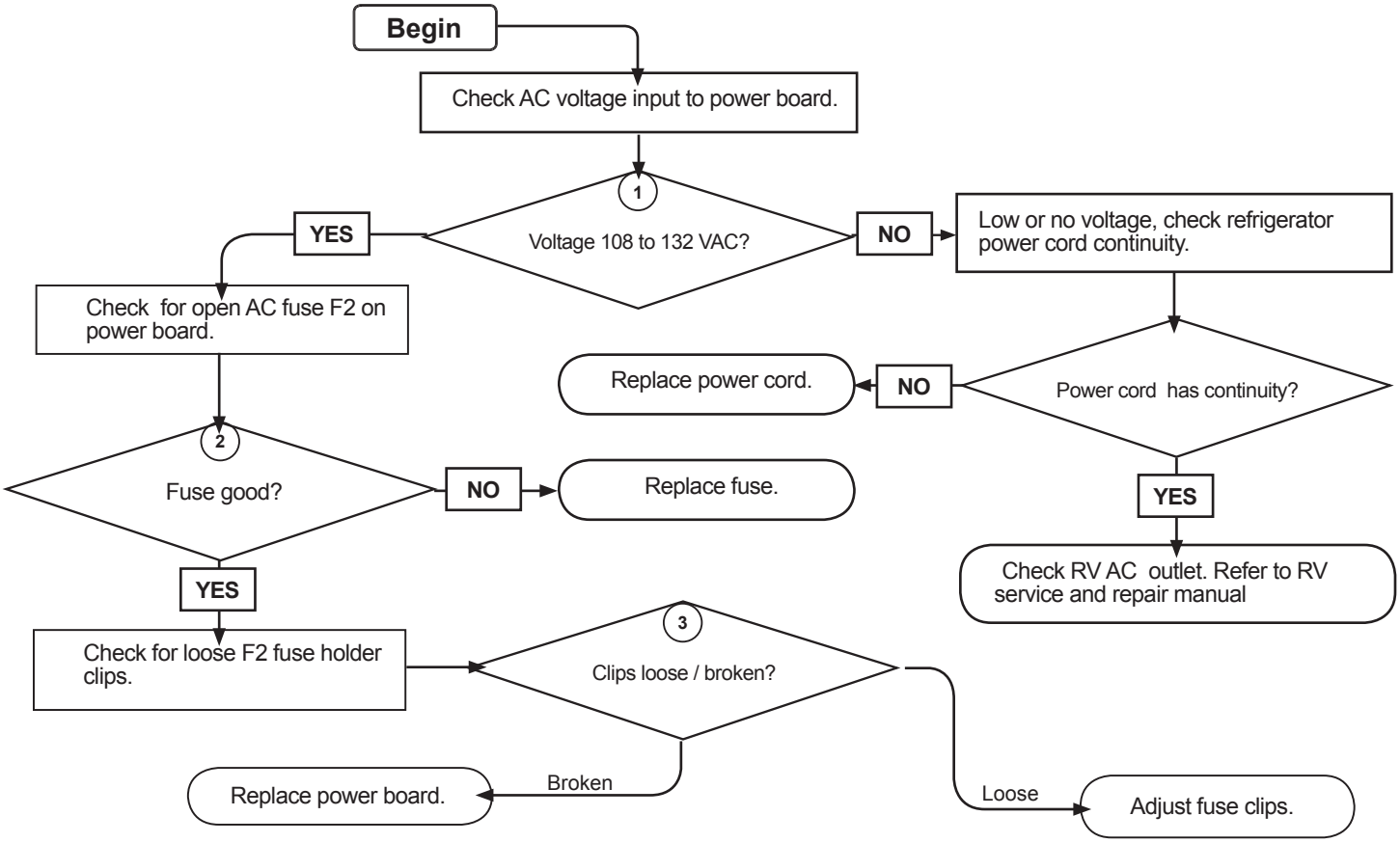

no FL Code—Burner Failed to Light/Relight

◀IMPORTANT▶

The no FL fault is recorded in both the AUTO and MANUAL LP mode. Once the 30-second trial for ignition has timed out, the fault is set and recorded in non volatile memory approximately 25 seconds later.

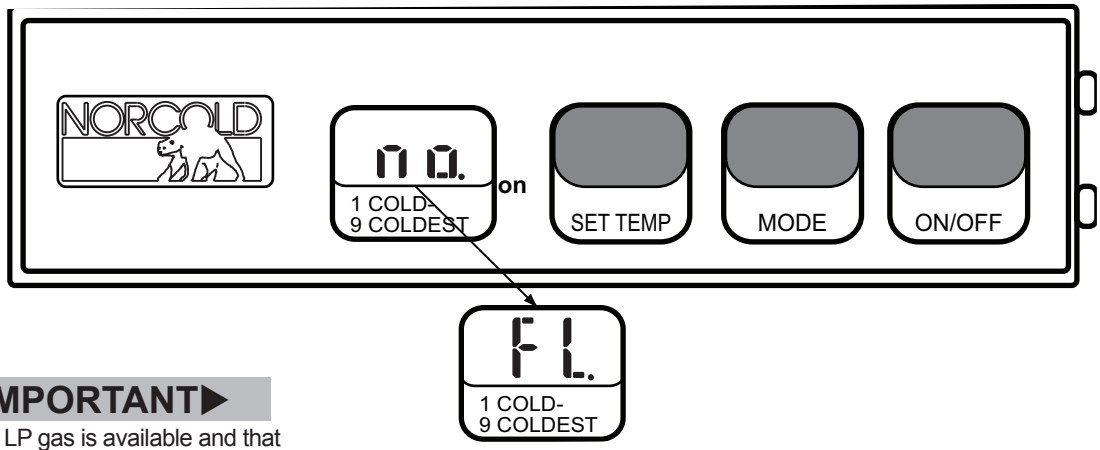

◀IMPORTANT▶

Make sure LP gas is available and that gas pressure is 10.5 to 11.5 in. w.c.

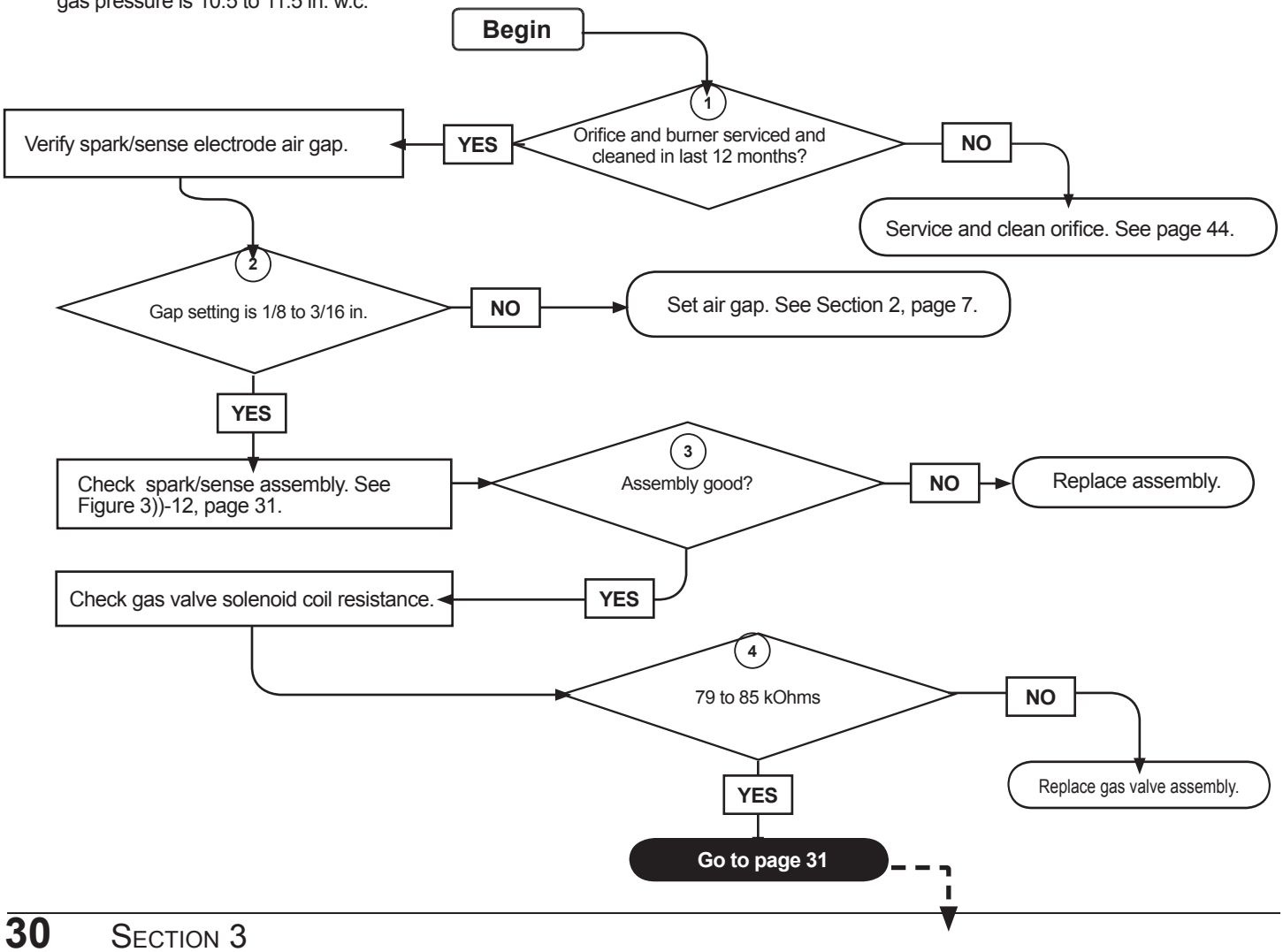

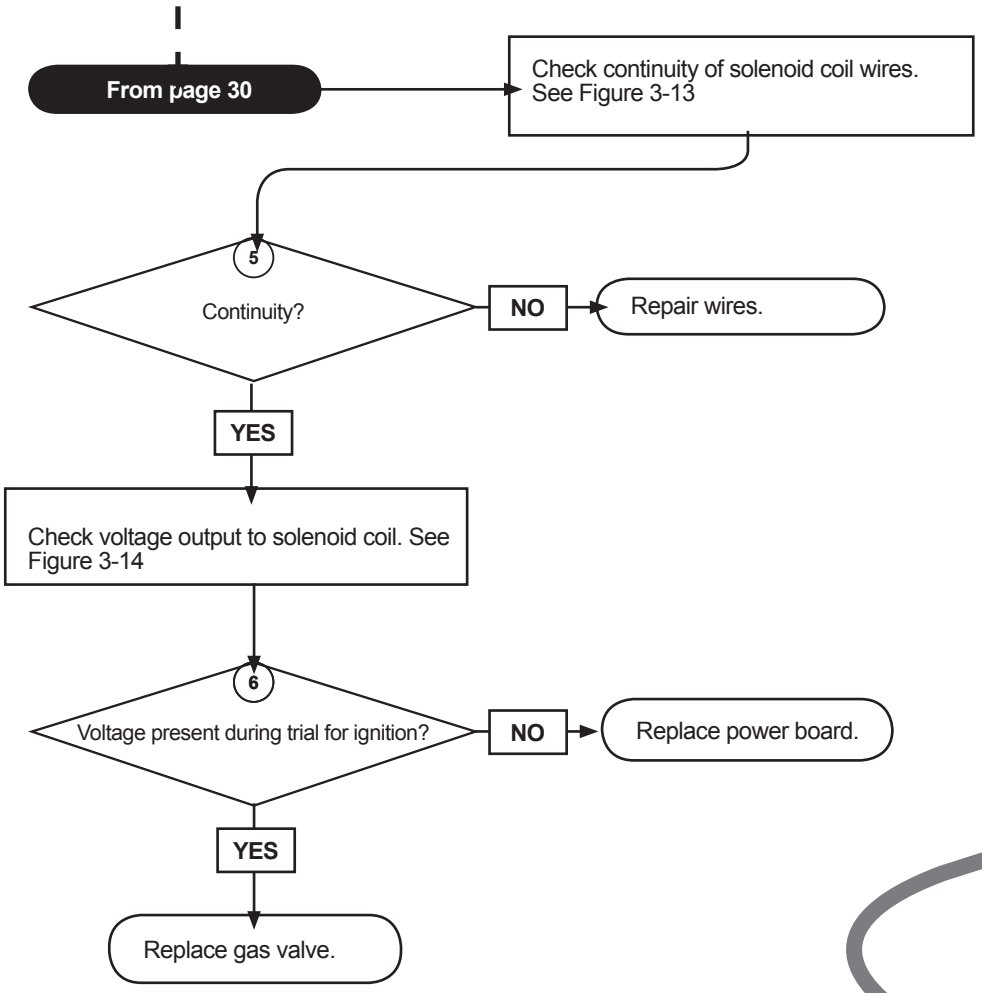

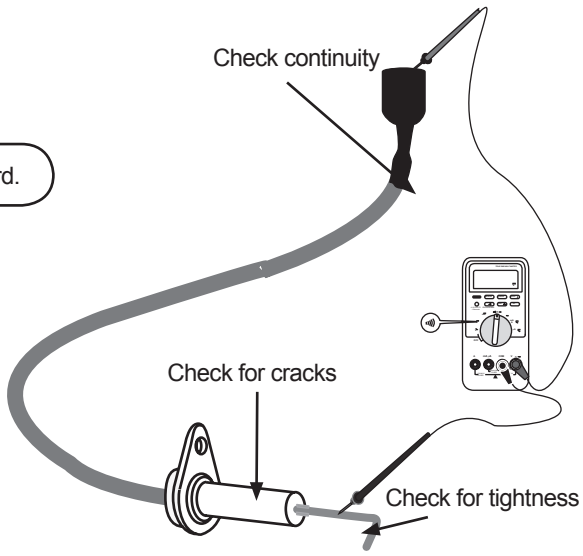

Figure 3-12. —Spark/electrode assembly.

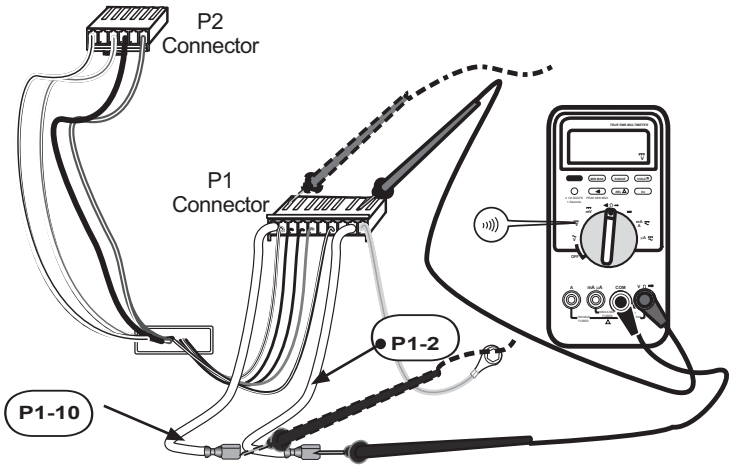

Figure 3-13. —Checking solenoid coil wires continuity.

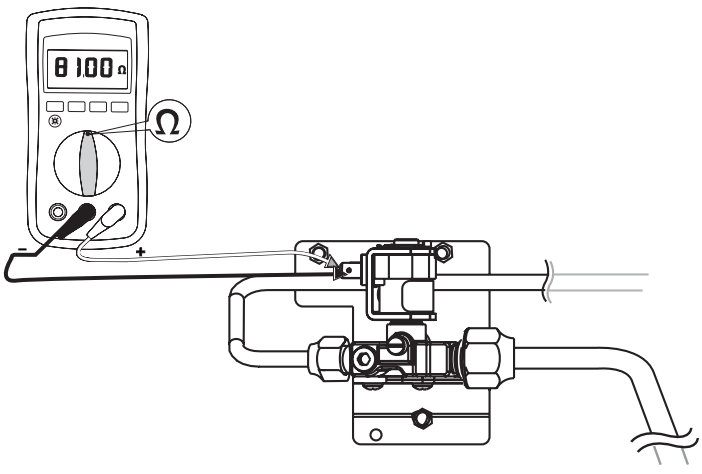

Figure 3-14. —Checking solenoid coil resistance.

Sr Code—Flame Sensing Malfunction

◀IMPORTANT▶

This fault is recorded in all operating modes anytime one of the following occurs:

1. Problem in flame sense circuitry.
2. Gas valve drive circuit present when it is not supposed to be.
3. Gas valve drive circuit not present when it is supposed to be.
4. Internal memory fault.

The fault registers approximately 25 seconds later in Diagnostic screen 5, segment #5.

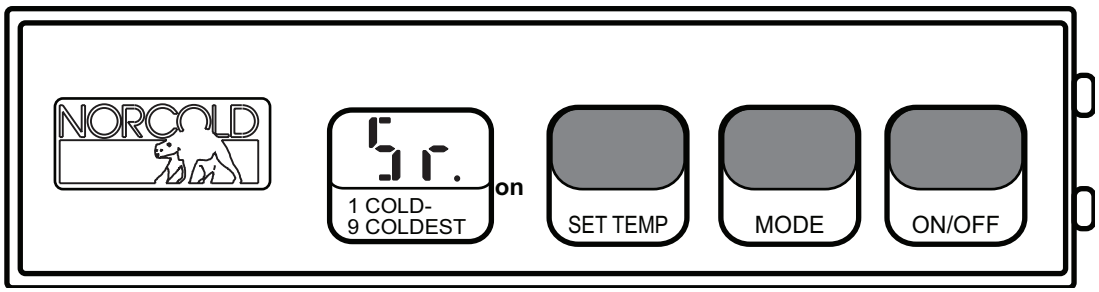

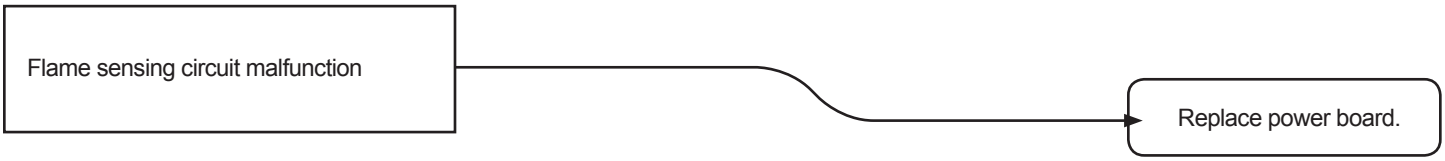

SECTION 4 —VENTILATION

Enclosure

The cabinet that encloses the refrigerator is built by the RV manufacturer. Depending on cabinet depth, height, and width certain baffles may be present when cabinet clearances exceed installation guidelines and specifications.

Baffles

Baffles prevent hot air buildup “pocketing” between the refrigerator cabinet and the enclosure walls and/or ceiling. An enclosure may be fitted with:

- An absorber baffle and a condenser baffle
- Side baffles
- Vertical top baffle
- Vertical angled baffles
- Box baffle
- Or a combination of any of the above.

Air Intake Vent

Ventilation and combustion air flow through the air intake vent, which also serves as the service access or door.

The air intake vent needs be kept clear of obstructions that may restrict the flow of fresh air into the enclosure. Figure 4-1 illustrates a typical air intake vent installation.

Roof Exhaust Venting

In a roof exhaust venting warm air and combustion gases flow out of the enclosure through the roof exhaust vent. See Figure 4-1.

The vent has a non- removable metal mesh screen to prevent leaves, birds, rodents and/or debris from entering the enclosure.

Roof cap

The roof cap fits over exhaust vent. The sloped end always faces the front of the RV. It is held in place by four 2-1/2" long Phillips head screws. Figure 4-1 illustrates the roof cap and screws

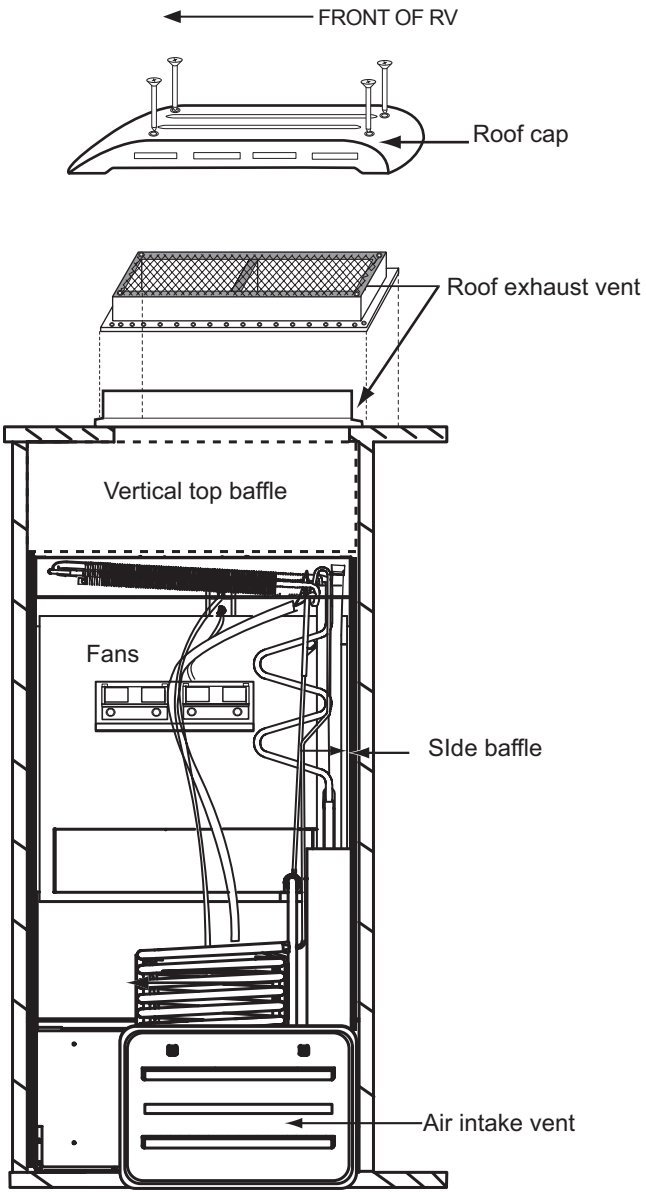

Figure 4-1. —Roof exhaust venting arrangement.

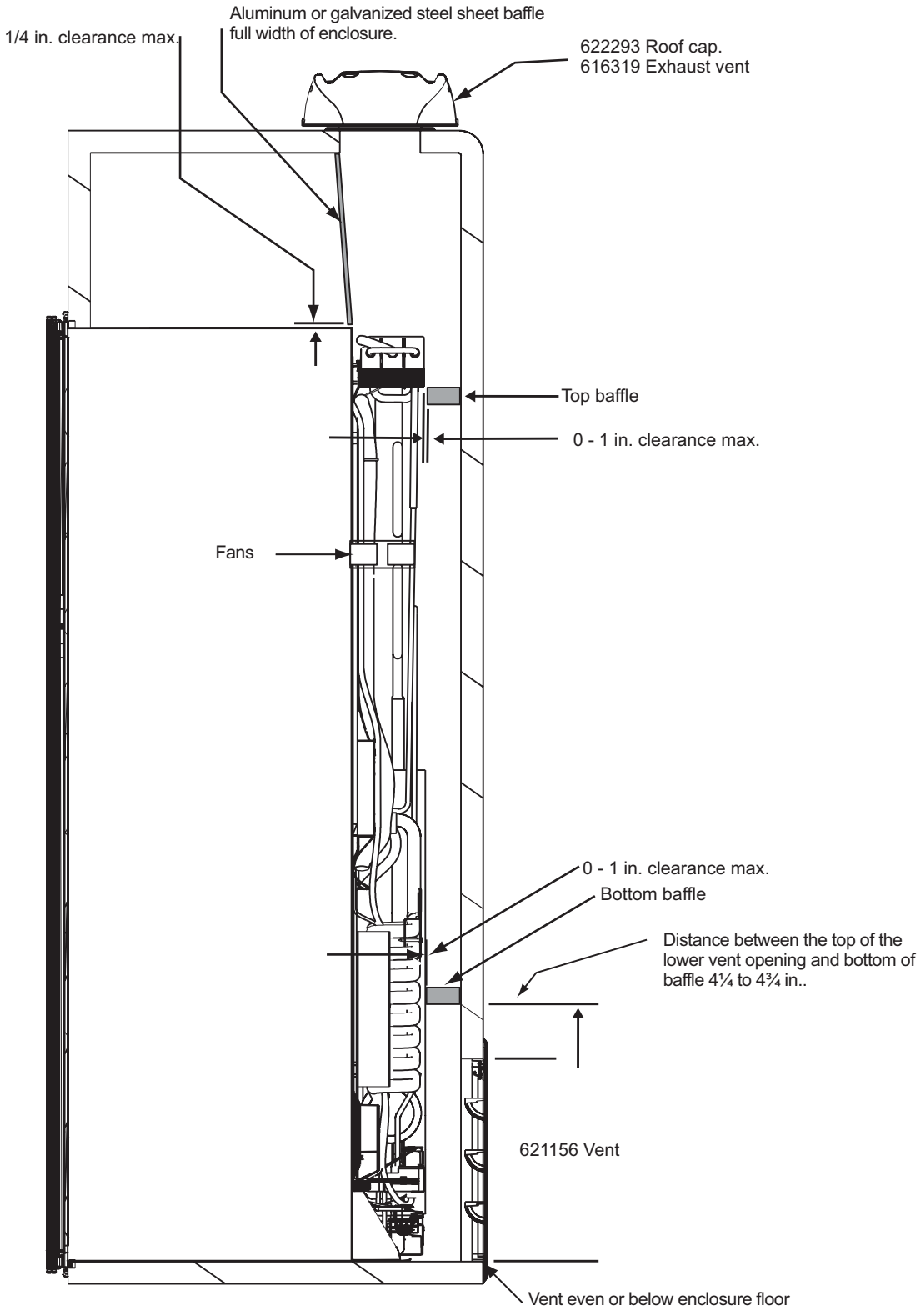

Figure 4-2.—Roof venting - Exhaust vent centered over cooling system, enclosure depth more than 24 in. and less than 26 in.

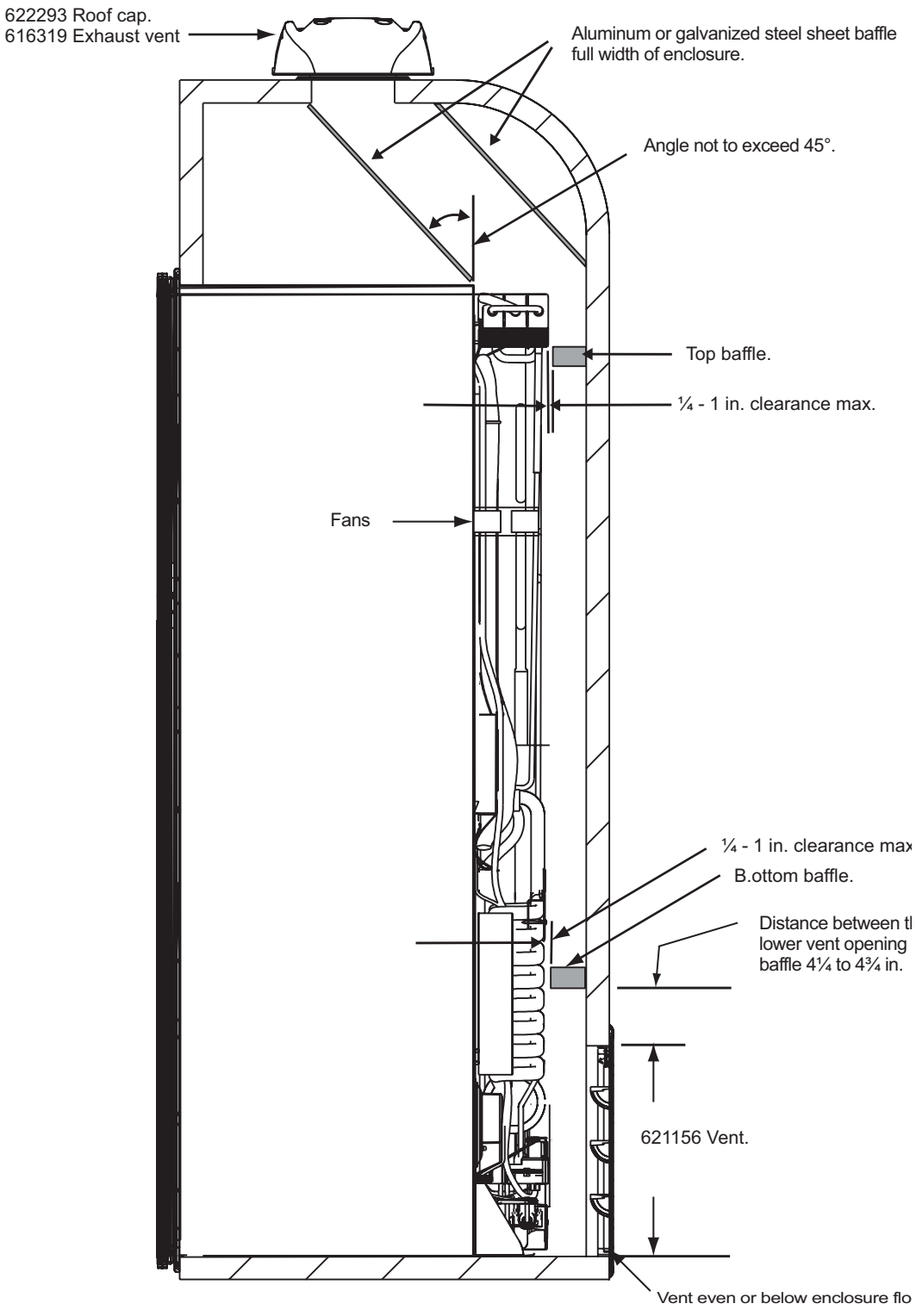

Figure 4-3.—Roof venting - Exhaust vent offset inboard of cooling system, enclosure depth more than 24 in. and less than 26 in.

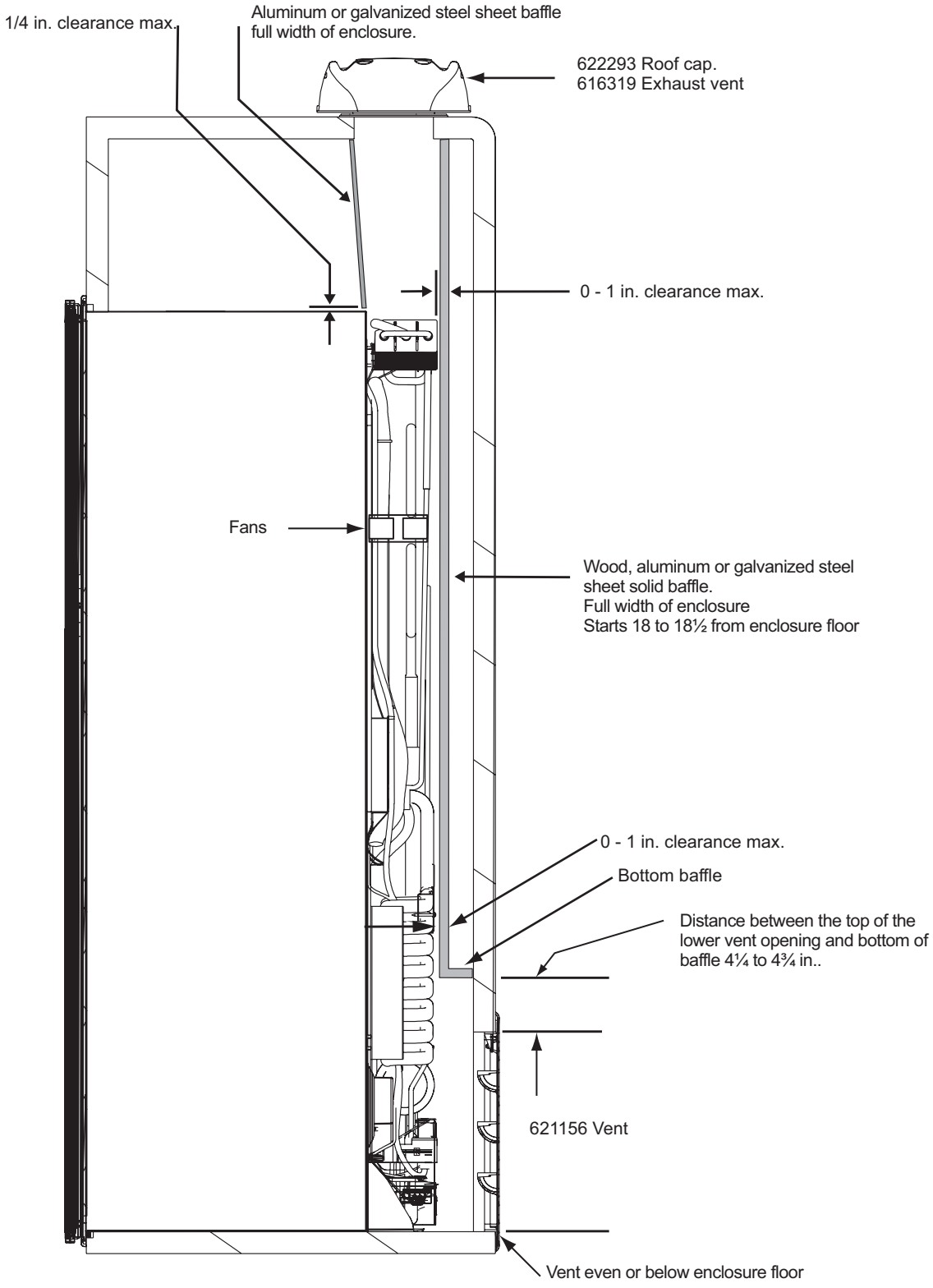

Figure 4-4.—Roof venting - Exhaust vent centered over cooling system, enclosure depth more than 26 in. - Box baffle required.

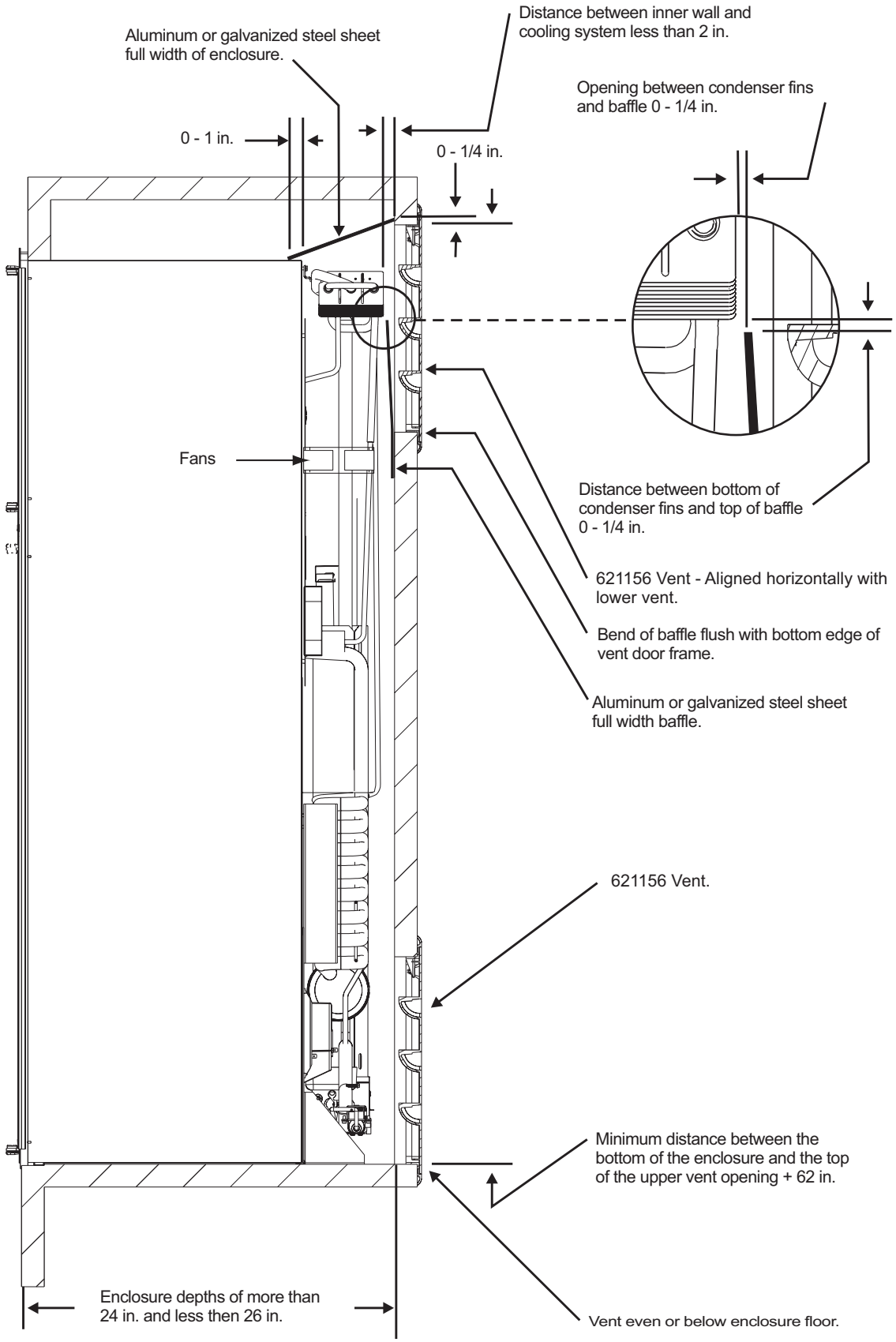

Figure 4-5. —Sidewall venting - Enclosure depth more than 24 in. and less than 26 in.

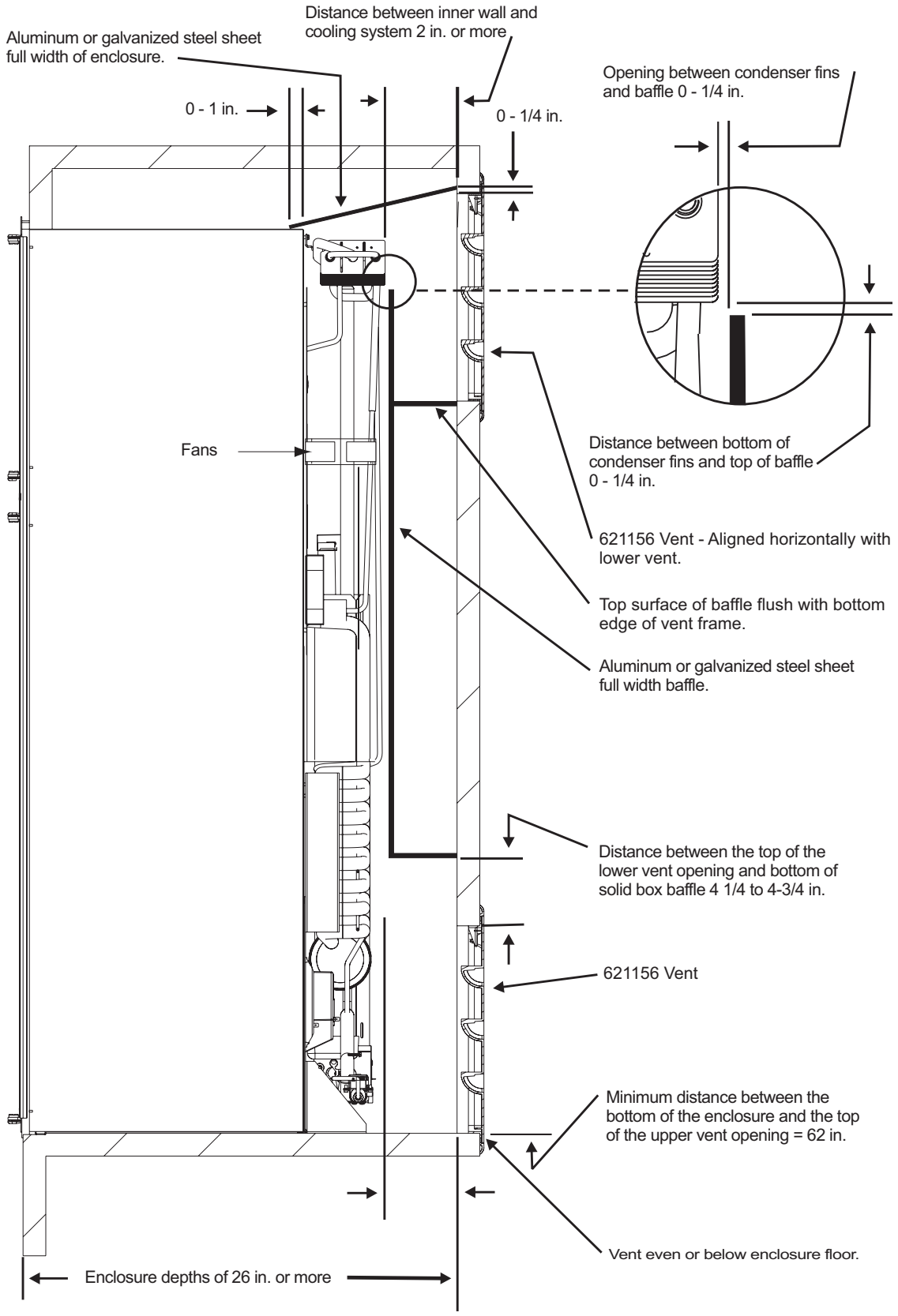

Figure 4-6. —Sidewall venting - Enclosure depth more than 26 in - Box baffle required.

SECTION 5 —LP GAS SYSTEM

WARNING

When working on or near the LP gas system:

- **Do not smoke or light fires! Extinguish all open flames!**
- **Do not use matches, lighters or an open flame to test for LP gas leaks. LP gas is highly flammable and explosive.**
- **Do not connect the refrigerator directly to the LP gas container. Always use an approved LP gas regulator to supply propane gas to the refrigerator.**
- **Do not modify any of the refrigerator LP gas system components, piping, or fittings**
- **Do not cross thread fittings. Be careful when connecting or disconnecting components, piping or fittings.**
- **Always use two wrenches to loosen or tighten fittings to prevent damaging components, piping, or fittings. Damaged components, piping, or fittings create the potential for gas leaks.**
- **Leak test all fittings that have been taken apart or disturbed during servicing, repairing or replacing components.**

Pressure Requirements

The LP gas system is for propane gas at a nominal pressure of 11 inches water column (" w.c.). Propane gas pressures between 10.5 and 11. 1.5" w.c. provide necessary amount of gas for efficient combustion and heat generation.

Gas pressure below 10.5" w.c.

Gas pressure below 10.5" w.c. results in a weak flame with low heat input to the cooling system boiler. Low heat input directly affect cooling performance

Additionally, the weak flame may not be sensed by the controls flame sensing circuit, which will cause the controls to shut off the gas valve, lockout gas operation and display the no flame fault code (no FL).

Gas pressure above 11.5" w.c.

Propane gas pressure above 11.5" w.c. tends to lift the flame from the burneror blow out the flame, which will cause the controls to shut off the gas valve, lockout gas operation and display the no flame fault code (no FL).

High LP gas pressure can cause incomplete propane gas combustion, which may be indicated by a “popping” sound at the burner.

Checking propane gas pressure

Use a “U” shaped manometer or comparable tool to check propane gas pressure.

When checking propane gas pressure, at least 50 percent of the RV btu load need to be on. This ensures that the LP gas regulator is capable of delivering and maintaining gas pressure throughout the system, including the refrigerator.

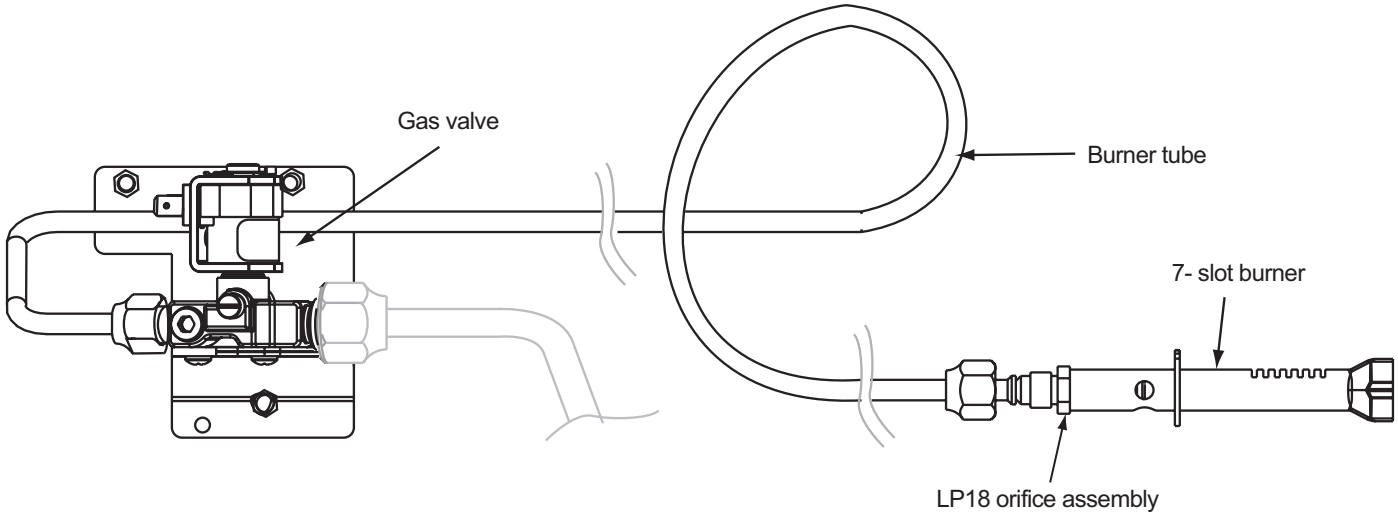

Figure 5-1. —121X model LP gas system components.

Gas Valve

The combination gas valve is illustrated in Figure 5-1.

Specifications

Solenoid coil amp draw... 0.146 A @ 12 VDC
Resistance .....81 OHMS
Maximum pressure .....1/2 PSI

Operation

In AUTO LP gas mode or LP gas mode operation the controls energize the solenoid coil to open the gas valve. Spring pressure closes the valve when the electronic controls de-energize the solenoid coil.

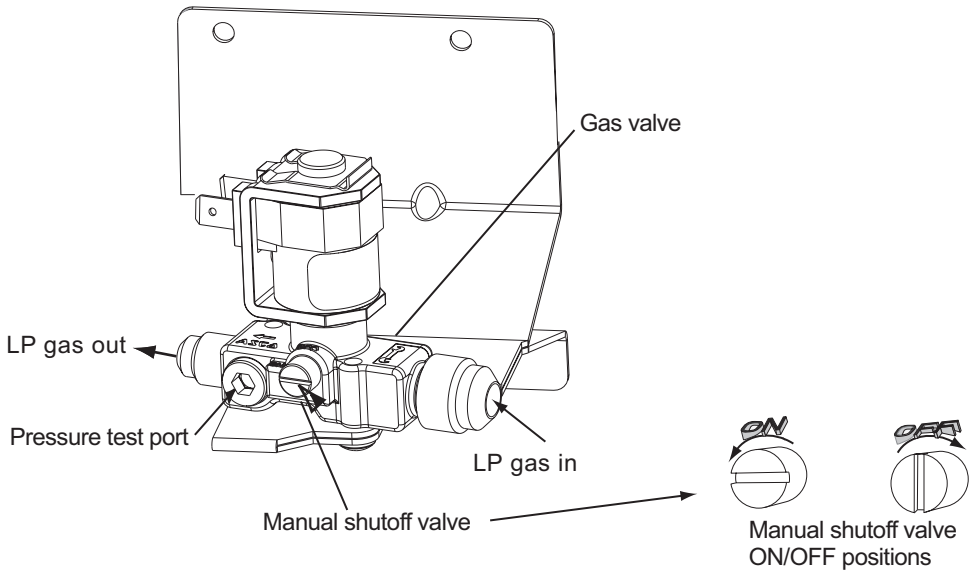

Figure 5-2. —Gas valve.

Serviceability

The gas valve has no replaceable parts.

The 12 volt DC solenoid coil terminals should be maintained clean and tight. The valve's body and solenoid coil should be maintained clean and dry.

Gas Valve Replacement Procedure

Tools:

#2 Stubby Phillips screwdriver

9/16" Open end wrench

5/8" Open end wrench.

Leak test solution

To replace the gas valve:

1. Turn off the refrigerator.
2. Disconnect DC power at the power board.
3. Unplug AC cord at the RV outlet.
4. Shut off the gas valve(s) at the LP gas container(s).
5. Disconnect the 12 volt DC power supply wires at the gas valve solenoid coil.

WARNING

Always use two wrenches to loosen or tighten fittings to prevent damaging components, piping, or fittings. Damaged components, piping, or fittings create the potential for gas leaks.

NOTE

For steps 6 through 12 refer to Figure 5-3, page 42.

6. Disconnect the LP gas supply line.
7. Disconnect the burner tube.
8. Remove two, #8/32 x 3/8" Phillips screws holding the existing gas valve to the bracket, then remove the valve. See Figure 5-3, page 42.
9. Install the new gas valve on the bracket and fasten it to the bracket using the two, #8/32 x 3/8" Phillips screws removed in step 8 .
10. Reverse steps 7 through 5 to connect the LP gas supply line and the burner tube to the new valve.

WARNING

Do not wet or spray leak test solution on or near electrical connections or electronic components. All water leak test solution conducts electricity and may create electric shock hazard, shorts, and/or damage circuits.

WARNING

Do not use leak test solutions that contain ammonia or chlorine. Ammonia and chlorine corrode brass and cooper components.

11. Open the gas valve(s) at the LP gas container(s).
12. Leak test the LP gas supply line fitting.
13. Plug the AC cord into the RV outlet.
14. Connect 12 VDC power to the power board.
15. Turn on the refrigerator, then set the MODE to LP gas operation.
16. Leak test the gas valve burner tube connection fitting, the burner tube orifice connection at the orifice assembly.

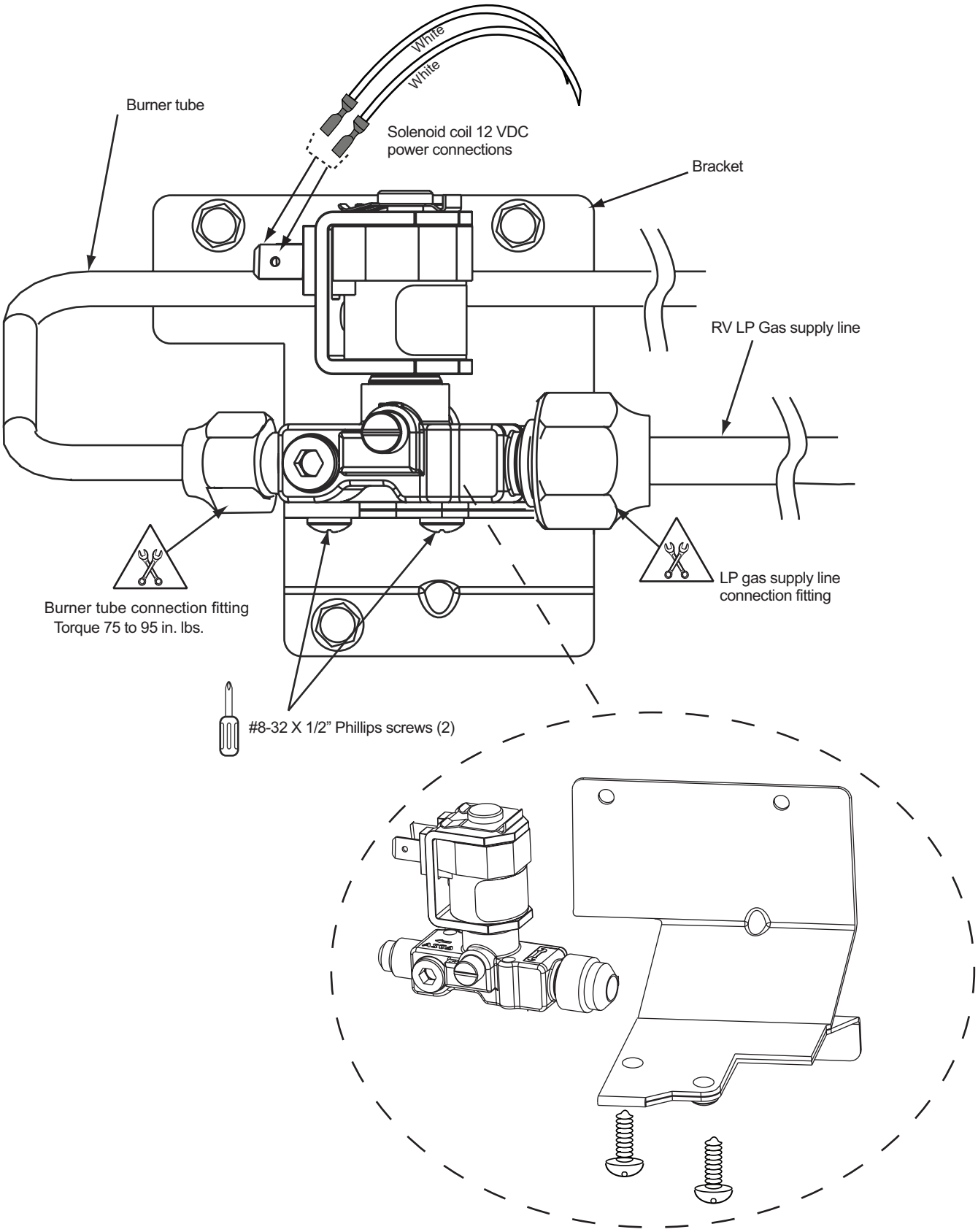

Figure 5-3. —Gas valve replacement.

Measuring Solenoid Coil Resistance

Tools:

Multimeter

To measure solenoid coil resistance.

1. Turn off the refrigerator.
2. Disconnect wires at the solenoid coil connections.
3. Set multimeter to the Ohm function.
4. Connect multimeter probes to the solenoid coil terminals as illustrated in Figure 5-4.

   —Coil resistance should be within 77 and 85 ohms.

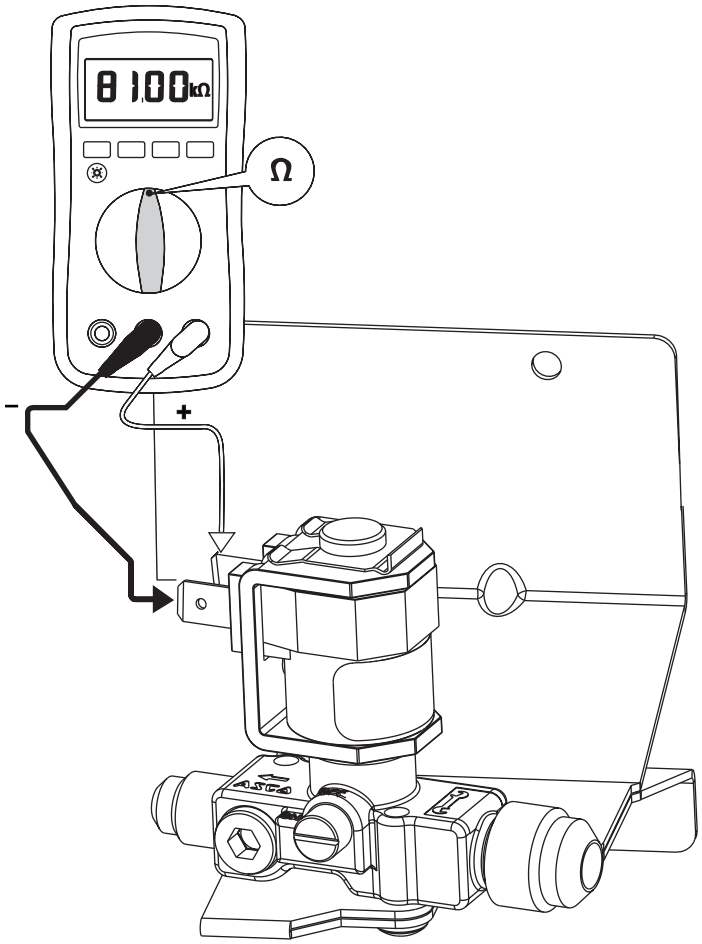

Figure 5-4. —Checking solenoid coil resistance.

Burner Tube Assembly

The burner tube is 1/4 inch OD aluminum tubing The anti-vibration loop absorbs vibration to prevent metal fatigue. Each end of the tube ends in a double flare. The burner tube is illustrated in Figure 5-5.

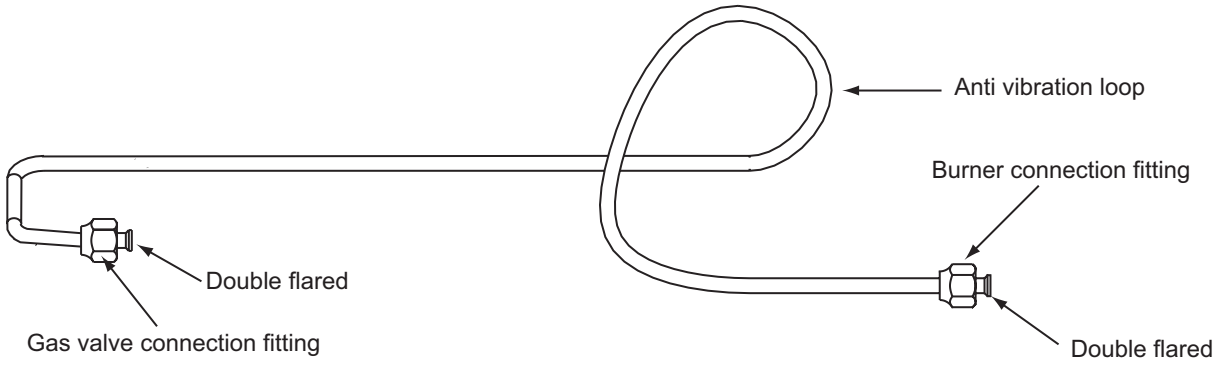

Figure 5-5. —Burner tube assembly.

Burner and Orifice Assembly

The 7-slot burner, illustrated in Figure 5-6 is fitted an LP 18 cap style orifice. The burner is retained in the burner box by a #8/32 x 1” Phillips pan head screw.

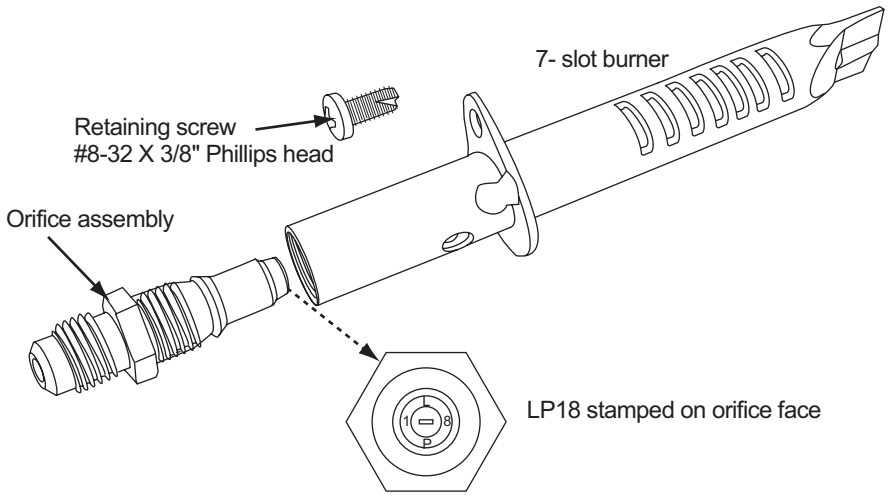

Figure 5-6. —Burner and orifice assembly.

Burner and Orifice Cleaning Procedure

WARNING

Burn hazard! Allow the burner box and orifice and burner assembly to cool before attempting removal and disassembly.

Tools:

#2 Medium Phillips Screwdriver

1/4" Nutdriver

1/2" Open end wrench

5/8" Open end wrench.

Small wire brush

Scouring pad

Denatured alcohol

Leak Test Solution

1. Turn off the refrigerator.
2. Shut off the gas valve(s) at the LP gas container(s).
3. Turn the manual shutoff valve to the off position
4. Move the drain hose out of the way.
5. Remove the drip cup screw, then remove the drip cup.

WARNING

Always use two wrenches to disconnect the burner tube from the orifice adapter to prevent damaging the tube or orifice adapter fitting. A damaged burner tube, or orifice adapter fitting creates a potential for gas leaks.

6. Remove the burner box cover screw , then remove the burner box cover.
7. Disconnect the burner tube at the orifice adapter.
8. Remove the orifice assembly from the burner.
9. Remove the burner retaining screw, then pull the burner out of the burner box.

WARNING

Do not insert any type of cleaning tool, wire, or drill bit through the orifice. Inserting of any type of cleaning tool, wire, or drilling damages the orifice and creates fire hazard.

10. Check the orifice. Replace if the condition of the orifice assembly is questionable. To clean the orifice assembly, dip the assembly in denature alcohol and air dry.
11. Clean the burner. The slots may be cleaned with a scouring pad or wire brush.
12. Insert the burner into the burner box, then install the #8/32 x 3/8” Phillips retaining screw. See Figure 5-7.
13. Install the orifice assembly onto the burner. Thread the orifice assembly into the burner by hand, then finish tightening using two wrenches.
14. Connect the burner tube to the orifice adapter fitting. Thread the fitting by hand, then finish tightening using two wrenches.
15. Install the burner box cover and fasten in place the retaining screw.
16. Open the valve(s) at the LP gas container(s).
17. Open the manual shut-off at the gas valve.
18. Turn on the refrigerator, then select the LP gas mode.
19. Leak test LP gas connections.

⚠ WARNING

Always use two wrenches to install the orifice assembly into the burner to prevent damaging the orifice adapter assembly or burner threads. A damaged orifice adapter for burner creates a potential for gas leaks.

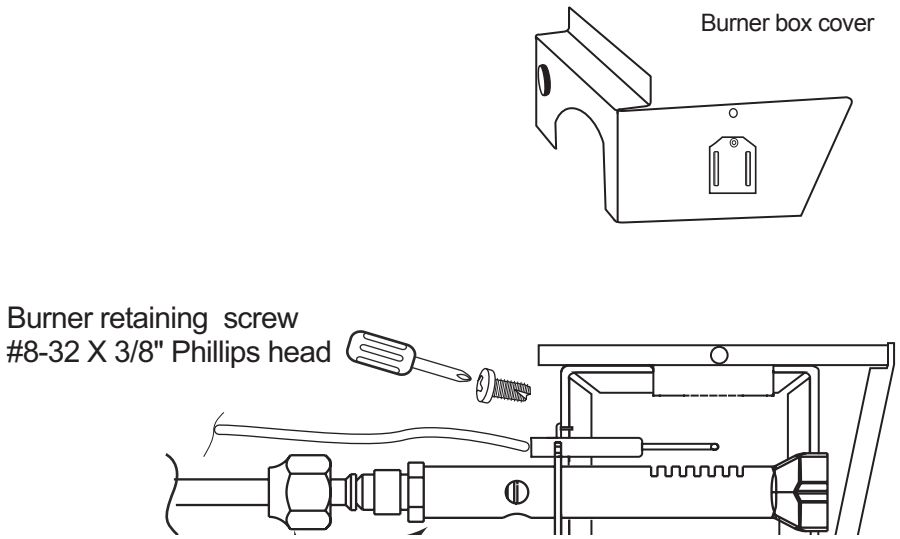

Figure 5-7. —Installing burner in burner box

SECTION 6 —ELECTRICAL POWER REQUIREMENTS AND COMPONENTS

DC Power Requirement

Refrigerator controls require 12 volt DC to function. The minimum voltage input to the power board is 10.5 volts; the maximum is 15.4 volts.

Polarity

The polarity of power board connections is as outlined below:

a. **+** 12 volt DC (positive) is to be connected to power board terminal **12VDC**. See Figure 6-1.

b. **–** 12 volt DC (negative) needs to be connected to power board terminal **GND**. See Figure 6-1.

Power Board DC Fuse

The power board is protected by a 5 amp, standard automotive blade style fuse. Fuse location is illustrated in Figure 6-2.

Fresh Food Compartment Light

The fresh food compartment light off and on operation is controlled by door operated switches. The location of each switch is illustrated in Figure 6-3, page 47.

Light bulb replacement

To replace the light bulb:

1. Power off the refrigerator.
2. Remove the light cover.
3. Remove the existing light bulb.
4. Install the new light bulb (P/N 61689122). Make sure the light bulb is fully seated and captured in the light fixture clips.
5. Reinstall the light cover.
6. Power on the refrigerator.

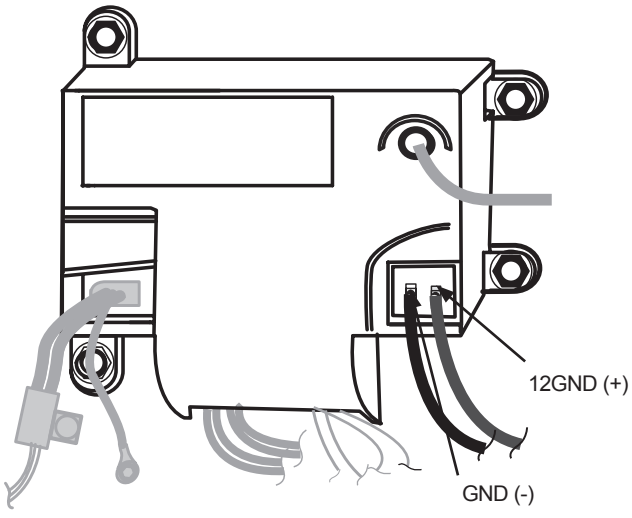

Figure 6-1. —DC power connections and polarity.

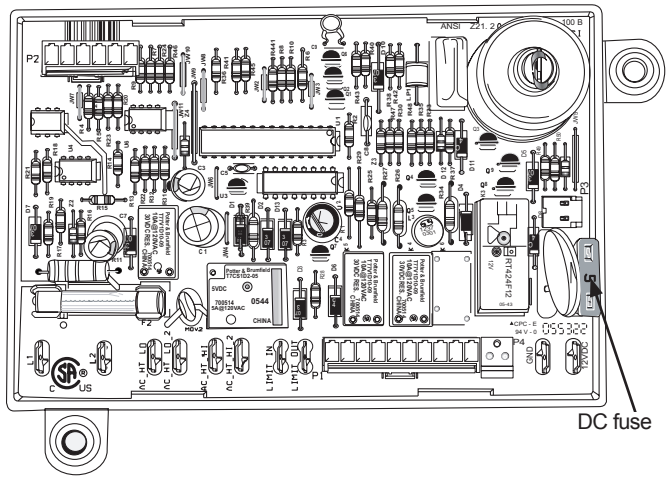

Figure 6-2. —DC power fuse location.

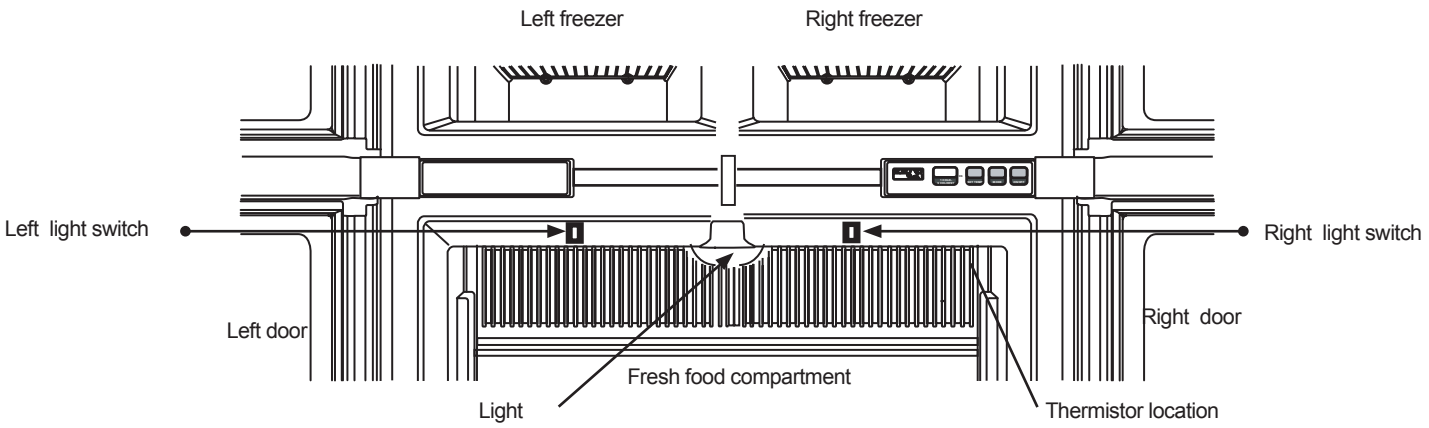

Figure 6-3. —Light, switches, and thermistor location.

Light/Thermistor Wire Assembly

The light and thermistor share a modular connector. Unplugging the connector from the circuit interrupts power to the light and disconnects the thermistor from the temperature sensing circuit.

Light/thermistor wire assembly replacement

To replace the light/thermistor assembly:

1. Power off the refrigerator.
2. Detach the thermistor from the fin. Location is illustrated in Figure 6-3.
3. Remove the light cover.
4. Unplug the light/thermistor assembly connector from the wire harness.
5. Disconnect the light wires from the light fixture. See Figure 6-4.
6. Connect the replacement light/thermistor assembly light wires to the light fixture. See Figure 6-4.
7. Plug the replacement light/thermistor assembly connector into the wire harness.
8. Reinstall the light cover.
9. Attach the thermistor to the fin to the second fin from the right and position it 1 to 1-1/2 inch from the top edge of the fin.
10. Power on the refrigerator.

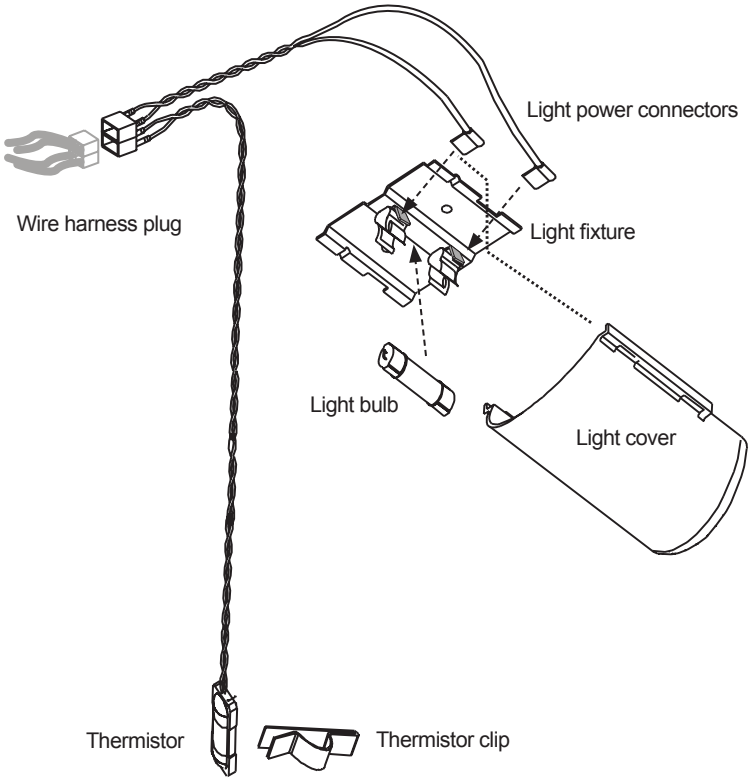

Figure 6-4. —Light / thermistor assembly components.

Divider Heater

The divider heater is permanently “foamed” between the freezer and fresh food compartment divider. Powering on the refrigerator automatically powers on the divider heater. Power to the heater is continuously supplied by the power board..

12 Volt DC Fans

Two 12 volt DC fans, illustrated in Figure 6-5, installed on the cooling system foam plug boost ventilation.

Fans are unidirectional and each fan draws 0.400 amps @ 12 volt DC. Fan resistance through the fan motor circuit is approximately 1.8 ohms.

The fans are controlled by a thermostatic switch. See ***“Thermostatic Switch.”***

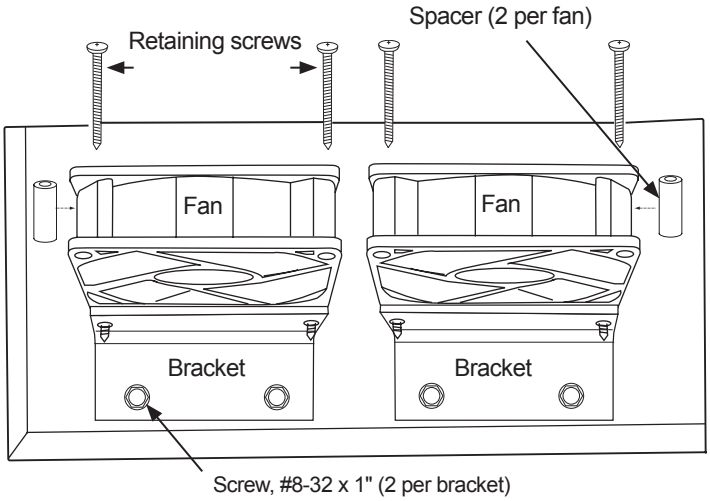

Figure 6-5. —Fans and hardware.

Thermostatic switch

The thermostatic switch is illustrated in Figure 6-6, Incoming +12 volt DC is fed through upper terminal. The switch turns the fans on and off. The fans come on when first condenser fin temperature is approximately 130 degrees Fahrenheit (54.4 degrees Celsius) and turn off at approximately 115 degrees Fahrenheit (46 degrees Celsius).

◀IMPORTANT▶

In roof vented installations it may be necessary to remove the refrigerator from the enclosure to test the thermostatic switch.

In sidewall installations the thermostatic switch can be tested by removing the upper sidewall vent..

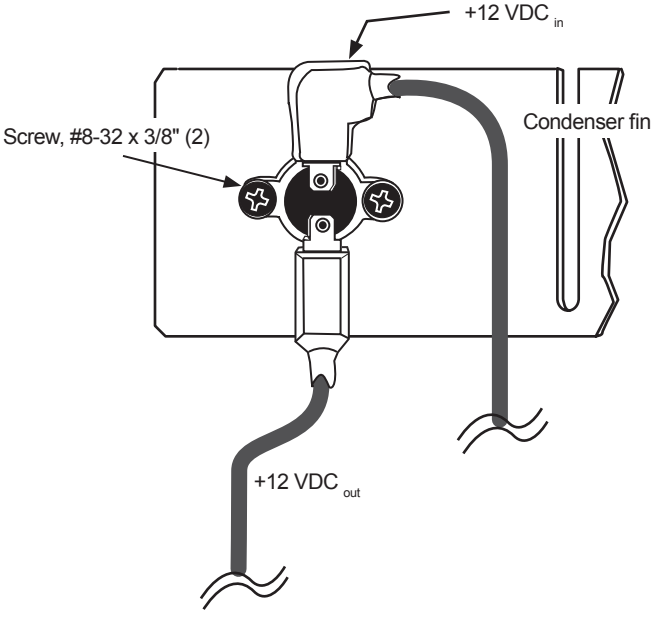

Figure 6-6. —Thermostatic switch for fans.

Fan replacement

◀IMPORTANT▶

Fan replacement requires removal of the refrigerator from the enclosure.

The RV manufacturer may have installed additional brackets and screws. Always, double check for additional screws and brackets before attempting to remove the refrigerator from the enclosure.

Tools:

1/4" nut driver

#2 Phillips-tip screwdriver

To remove the existing fan:

1. Disconnect the existing fan positive (+) wire connector and negative (-) wire at their respective “Y” jumper. See Figure 6-7.
2. Remove fan and bracket assembly from cooling unit.
3. Remove the existing fan and bracket from sump. Save the screws, and spacers to reinstall the new fan.
4. Reverse steps 3 to 1 and refer to Figure 6-7 to install replacement fan.

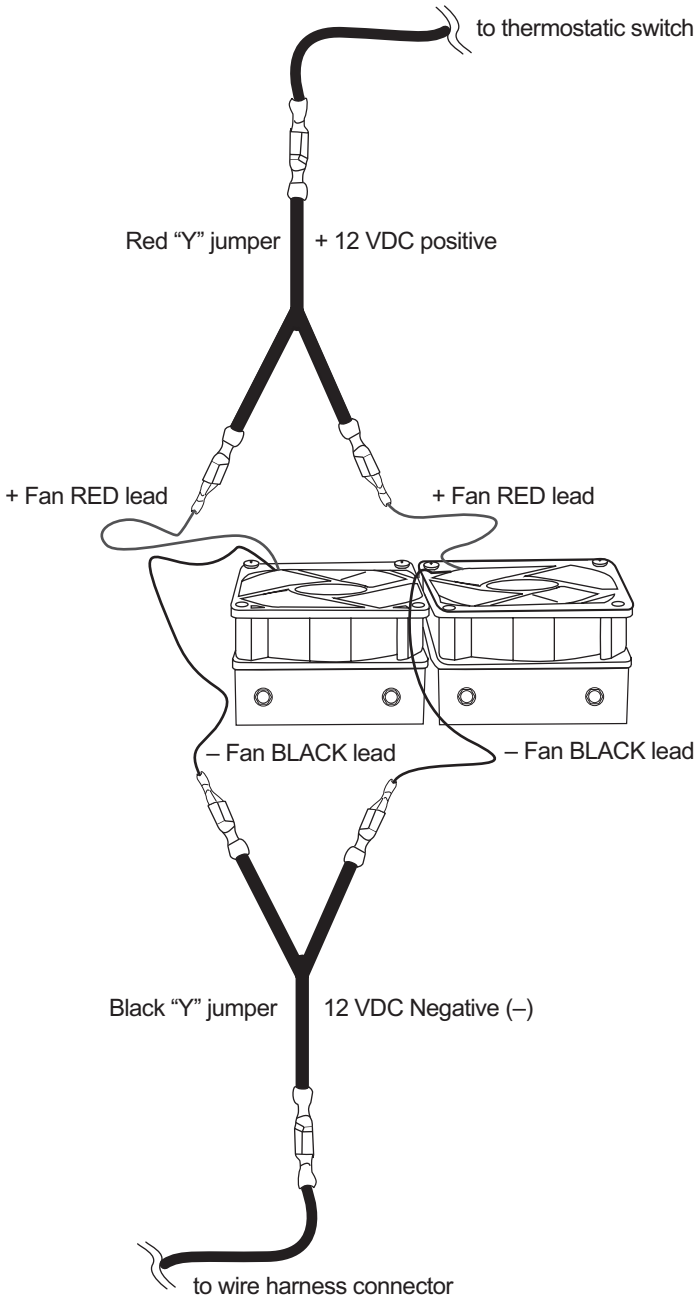

Figure 6-7. —Fans, wiring and connections.

Flapper Assembly

The flapper assembly, illustrated in Figure 6-8, is hinged to the left fresh food compartment door. It acts as the vertical sealing surface for the fresh food compartment doors inboard gasket.

The flapper is equipped with a 12 volt DC moisture reduction heater. The heater is supplied power through wires foamed into the door liner.

The heater is energize when the spring pins on the hinge side of the door make contact with the permanent contacts on the side of the fresh food cabinet.

For the heater to power on, the left fresh food compartment door has to be fully closed. Powering on the refrigerator automatically energizes the flapper heater circuit.

Heater operation can be detected by touching the exterior surface of the flapper assembly.. The overall surface should be slightly warm to the touch.

If the flapper surface feels cold to the touch or is wet, troubleshoot the heater as follows:

1. Check for bent, broken or missing spring pins.
2. Check door alignment. If needed align door so all spring pins make full contact with the center of the contacts on the cabinet.
3. Check heater resistance. Resistance reading should be approximately 40.6 to 47.2 ohms.

   Replace the flapper assembly if the heater is open, shorted or if the resistance is not within the values given in step 3.

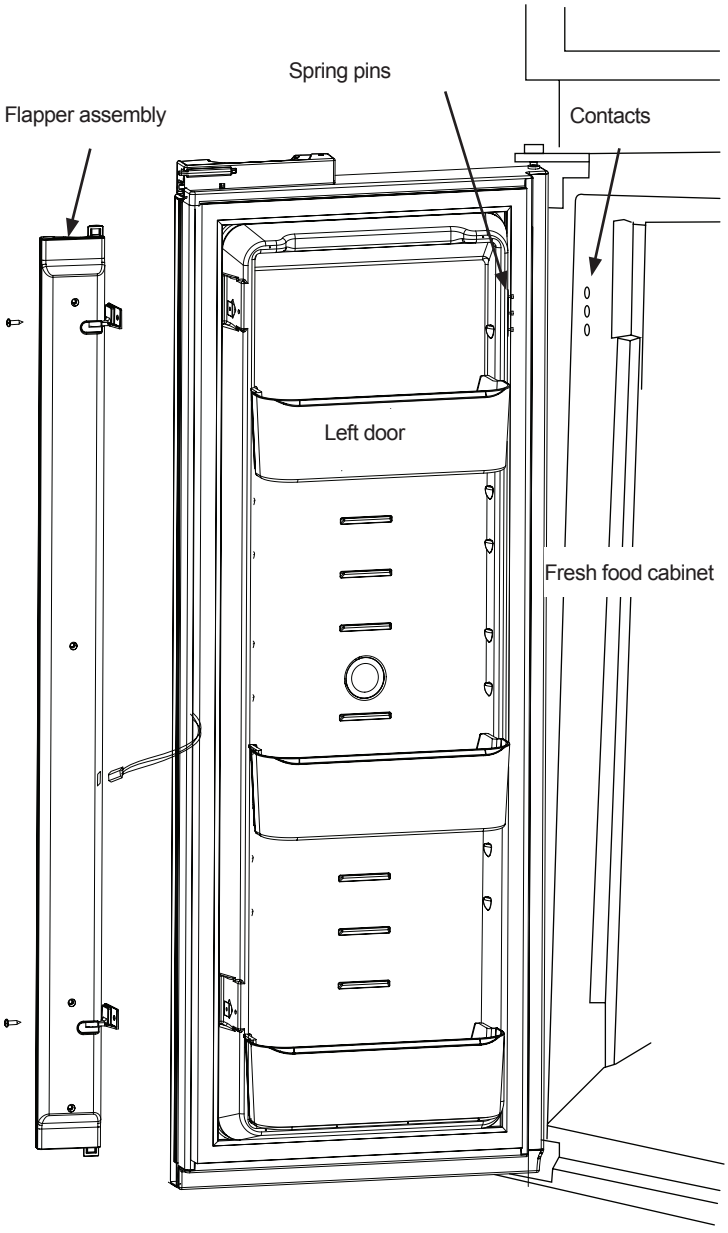

Figure 6-8. —Flapper assembly, left door, fresh food compartment.

Flapper replacement

Tools:

2 Phillips screwdriver

To remove the flapper assembly:

Refer to Figure 6-9 for location of components.

1. Power off refrigerator.
2. Open the left fresh food compartment door.
3. Remove the bottom and top flapper hinge screws.
4. Lift the flapper assembly until the hinges are clear of the stationary supports.
5. Disconnect the wiring connector at the at the flapper heater.

To install the replacement flapper assembly reverse steps 4 through 1 and refer to Figure 6-9.

After completing installation, close door and open the door several times to assure the flapper assembly rotates freely in and out of the guide blocks.

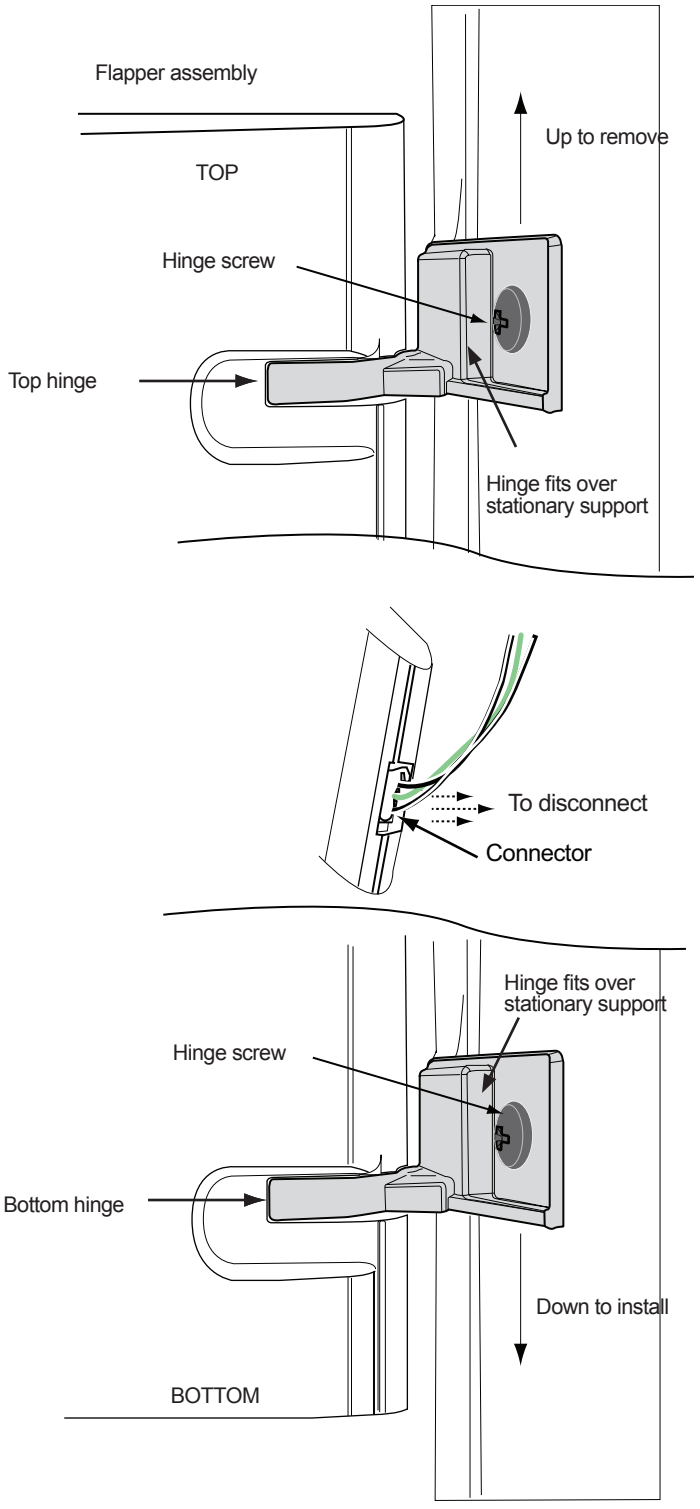

Figure 6-9. —Flapper assembly hinges and wiring connector .

CAUTION

Do not attempt to remove the spring pin flange from door! The flange is not a replaceable part. Attempting to remove the flange will disconnect the wires from the pins housing resulting in door replacement.

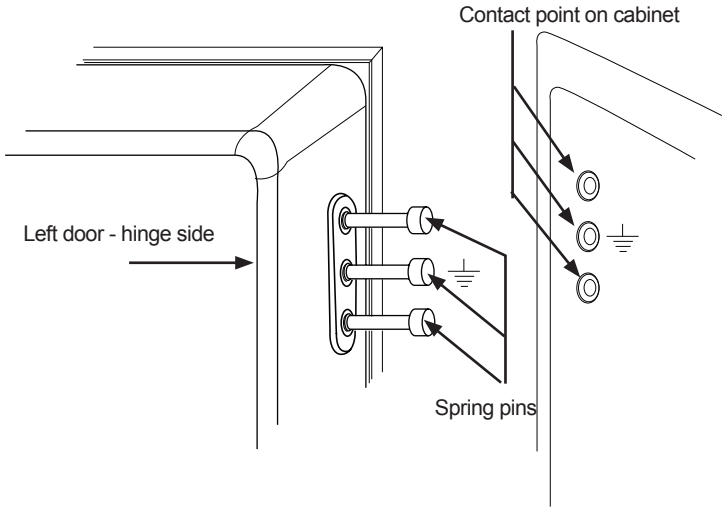

Figure 6-10. —Spring pins and cabinet contacts.

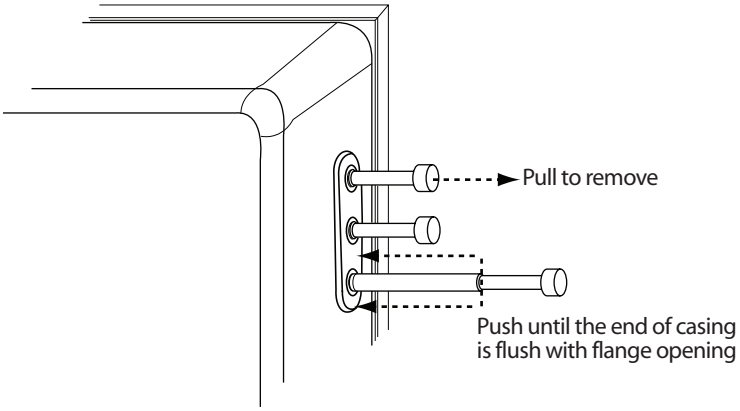

Figure 6-11. —Removable door seal heater spring pin removal and installation.

Spring pin replacement

A jammed, bent or broken spring pin has to be replaced to maintain the flapper assembly heater working.

To replace spring pin see Figure 6-11 and proceed as follows.

1. Open the left fresh food compartment door.
2. Pull out the existing spring pin from the flange.
3. Push and seat the replacement spring pin into the contact flange.
4. Check spring pin operation.

   a. Push the pin all the way until seated then release.

   b. Spring pressure should extend the pin fully when the contact is released.

AC Power Requirements

AUTO AC or AC mode operation requires 108 to 132 volts AC. Voltage is to be supplied through a 2 pole/3 wire/20 amp grounding type receptacle.

WARNING

- **Do not remove the grounding prong from the refrigerator AC power cord!**
- **Do not use a two prong adapter to connect the AC cord to an AC outlet!**

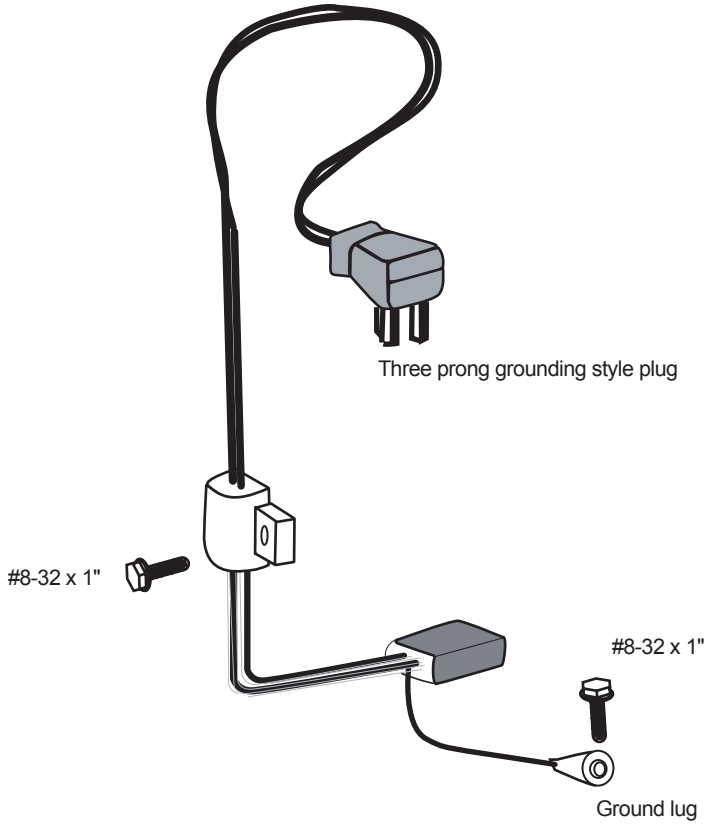

Figure 6-12. —AC Power cord, 1210/1211 no ice maker.

AC Power Cord —1210/1211

The AC power cord for a 1210 model without an ice maker is shown in Figure 6-12. The cord is attached to the refrigerator back plate with a #8-32 x 1" hex head screw. The cord ground wire lug is also attached to the back plate with a #8-32 x 1" hex head screw.

AC Power Cord —1211IM Ice Maker

The AC power cord for a 1211 model with an ice maker is shown in Figure 6-13. The cord is attached to the refrigerator back plate with a #8-32 x 1" hex head screw. The cord ground wire lug is also attached to the back plate with a #8-32 x 1" hex head screw.

As illustrated in Figure 6-13, two pigtails originating at the power board plug end connect to the ice maker wire harness. The third pig tail connects to the water valve solenoid coil terminal

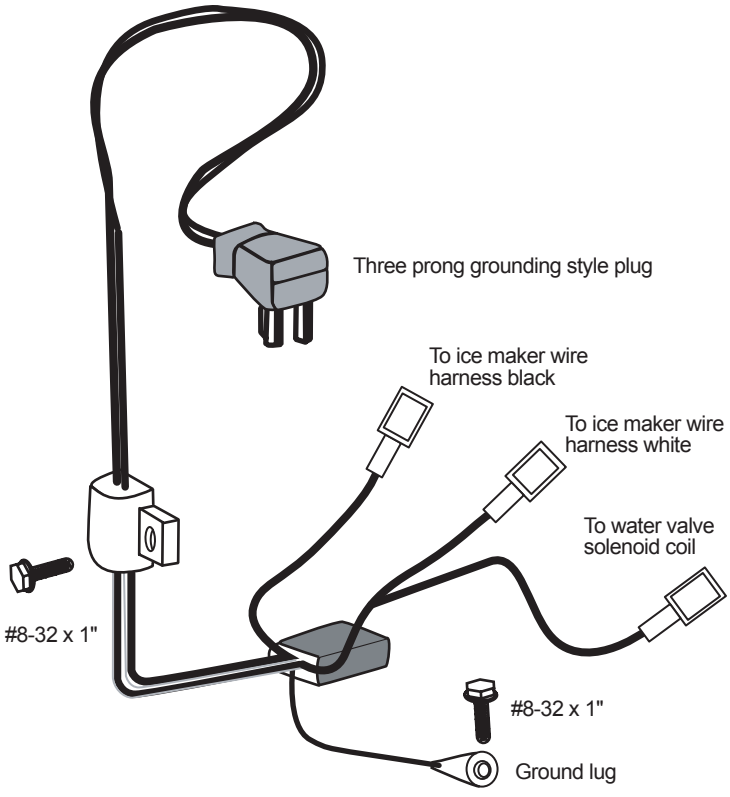

Figure 6-13. —AC Power cord, 1211 IM ice maker.

AC Fuse

The AC fuse, location illustrated on Figure 6-14, is an 8 amp fast acting 1/4 x 1-1/4 x 1" AGC fuse. Figure 6-15 illustrates how to check fuse continuity.

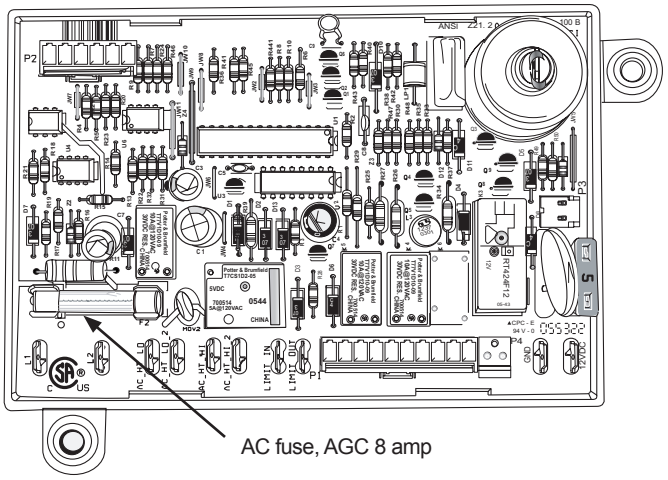

Figure 6-14. —AC fuse location on power board.

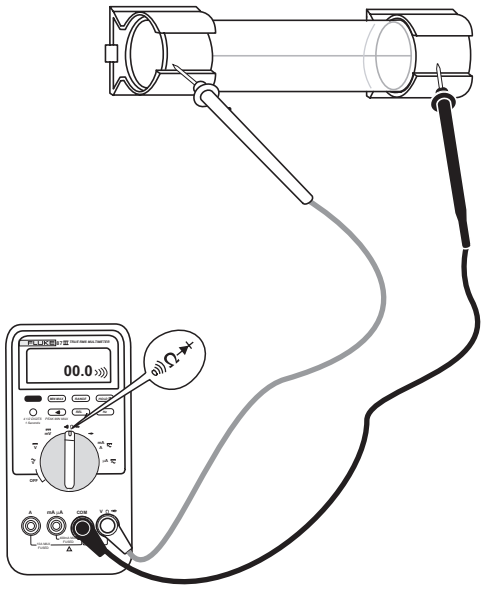

Figure 6-15. —Checking the AC fuse for continuity.

120 Volt AC Heaters

Two 120 volts AC heaters generate the heat load required for AUTO AC and AC manual mode operation. Each heater is rated for 225 watts @ 120 volt AC. Figure 6-16 shows the AC heaters fully seated in the heater tubes.

Each heater has a resistance value of 58 to 68 ohms at ambient temperature.

To replace heater(s) the refrigerator has to be removed from the enclosure.

WARNING

Burn hazard! Allow the canister and heaters to cool down before attempting removal and replacement.

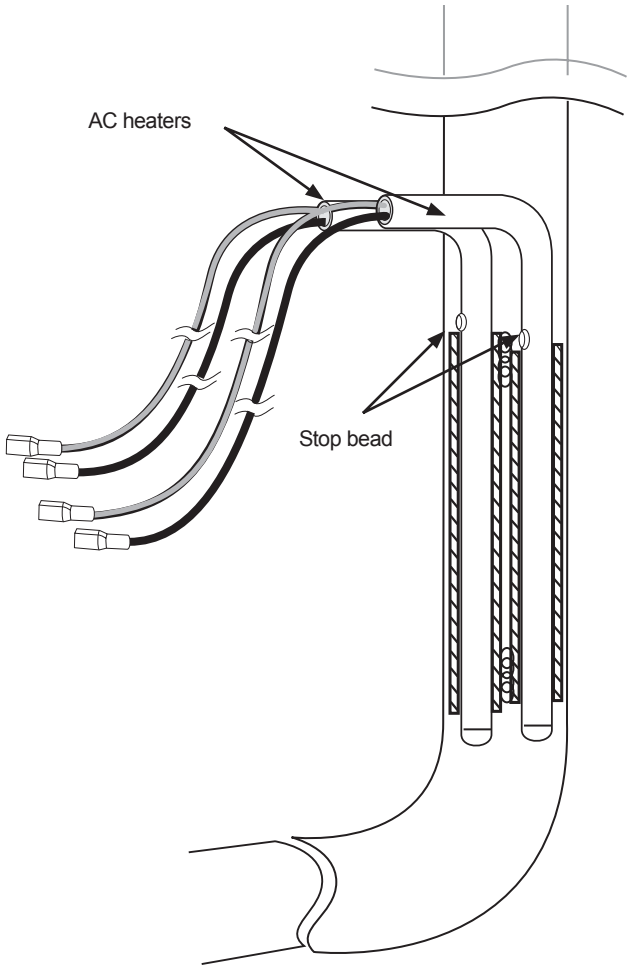

Figure 6-16. —AC heaters installed in heater tubes.

SECTION 7 —ELECTRONIC CONTROLS

Power Board

Figure 7-1 shows a front view of the power board. Inputs, outputs, monitoring information, and diagnostic functions are sent and received through a wire harness linking the power board with the optical control assembly.

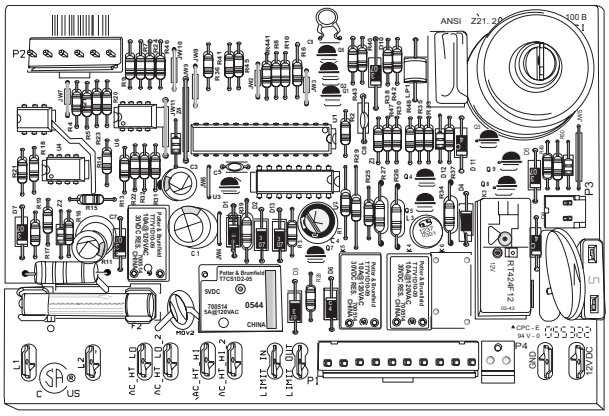

Figure 7-1. —Power board.

NOTE

The wire harness is “foamed” into the cabinet. It is not a replaceable component.

Base

The base, illustrated in Figure 7-2, is attached to the refrigerator back plate with two 8-32 x 1" hex head screws. Four locking tabs hold the power board to the base.

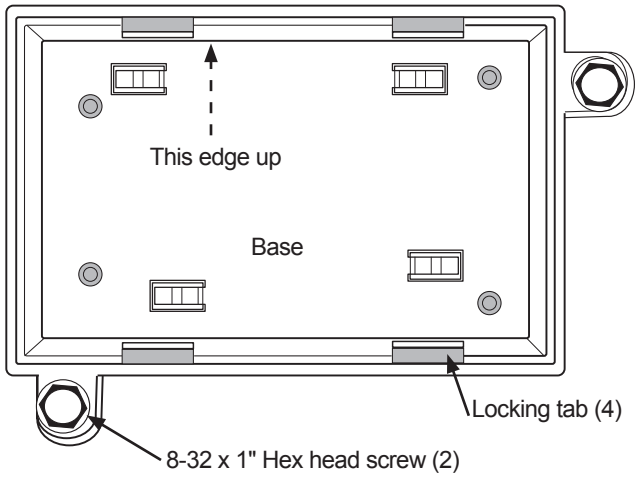

Figure 7-2. —Base, power board.

Cover

Figure 7-3 shows a front view of the cover. Two 8-32 x 1" hex head screws hold the covers to the refrigerator back plate.

Figure 7-4, page 56 shows the cover mounted over the power board with external connections in place.

Figure 7-5, page 56 shows the power board with the cover removed and all the internal connections in place,

NOTE

1210/1211 with ice maker/water dispenser

It may be necessary to move the water valve out of the way to remove and install the cover.

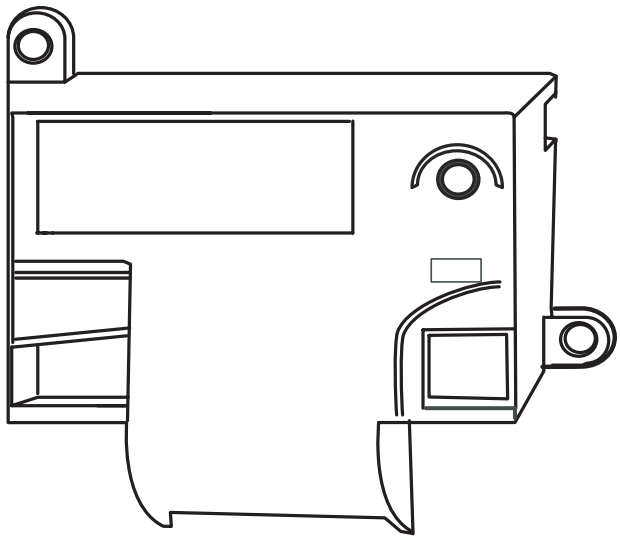

Figure 7-3. —Cover, power board.

Troubleshooting

Refer to Section 3 for troubleshooting information.

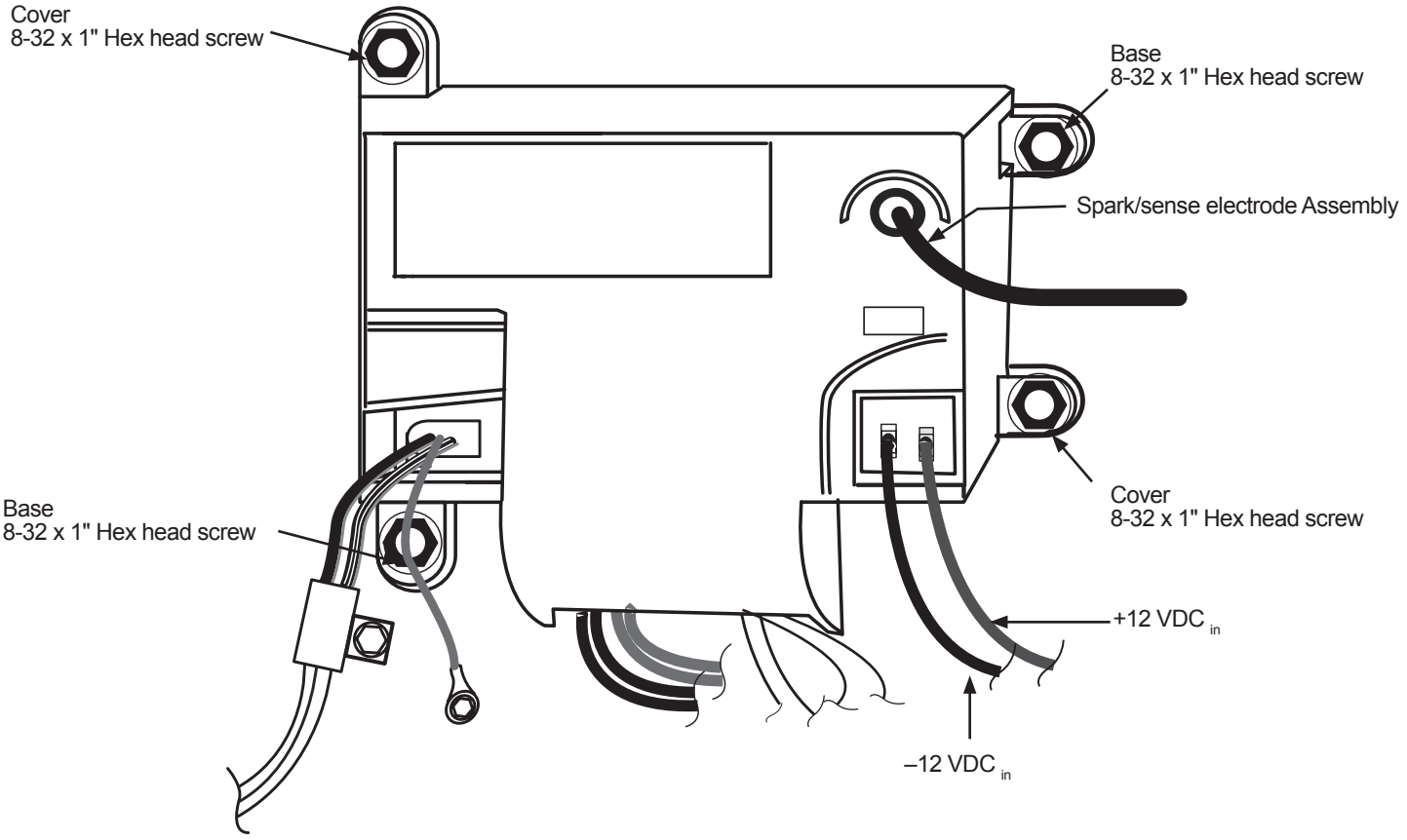

Figure 7-4. —Power board —External connections.

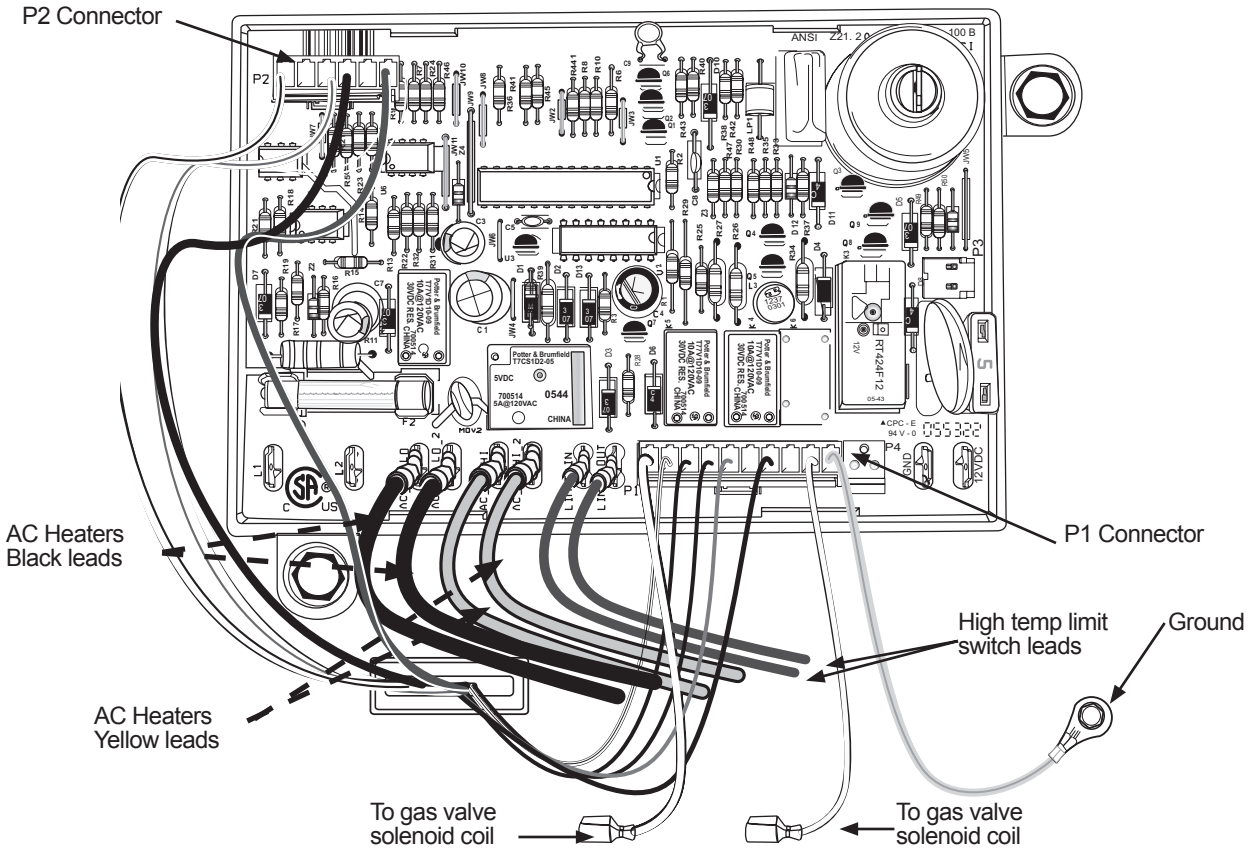

Figure 7-5 . —Power board —Internal connections.

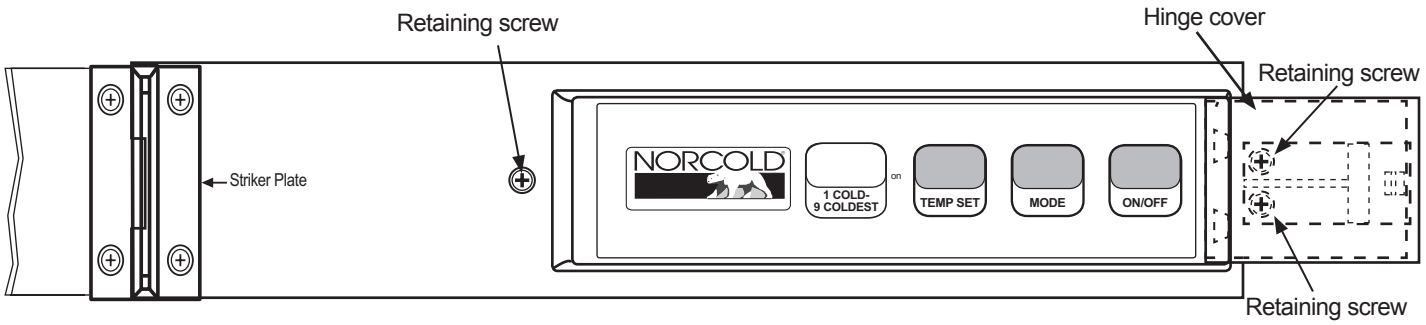

Figure 7-6. —Optical control display assembly overlay and hardware.

Optical Control Display Assembly

Figure 7-6 illustrates the front overlay view of the optical control assembly. The overlay has an ON/OFF button, a MODE select button and a TEMP SET button.

The ON/OFF button allows for powering on and powering off the controls. Powering off requires pressing and holding the button for approximately two seconds.

The MODE button allows for selection of any of the three available operation modes (AUTO, AC, or LP). Pressing the button momentarily allows verification the active mode. Holding the button changes the mode.

The TEMP SET button allows selection of any of the nine temperature settings (1 cold and 9 coldest). Pressing the button momentarily verifying the active setting. Holding the button changes the setting. Optical control display troubleshooting instructions may be found on Section 3 of this manual.

Optical control display assembly replacement

Tools:

#2 Phillips-tip screwdriver

To replace the optical control assembly see Figure 7-6, Figure 7-7, Figure 7-8, Figure 7-9 (page 58), and proceed as follows:

1. Turn off the refrigerator.
2. Remove the striker plate..
3. Remove the right side hinge cover.
4. Remove the three screws that hold the optical control assembly on the divider.
5. Disconnect the wire harness at the circuit board.
6. Connect the wire harness to the new circuit board.
7. Reverse steps 5 through 1 to complete procedure.

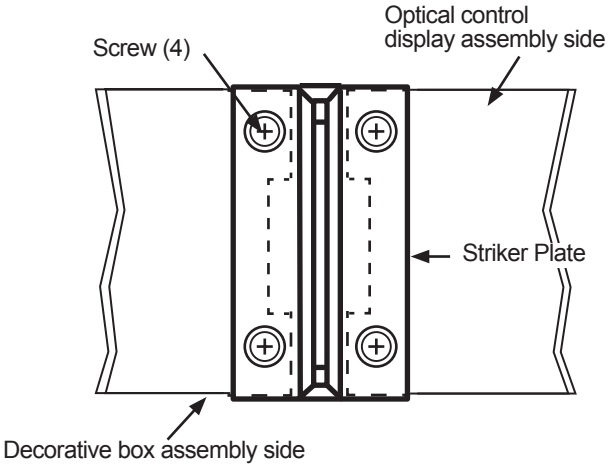

Figure 7-7. —Striker plate screws location.

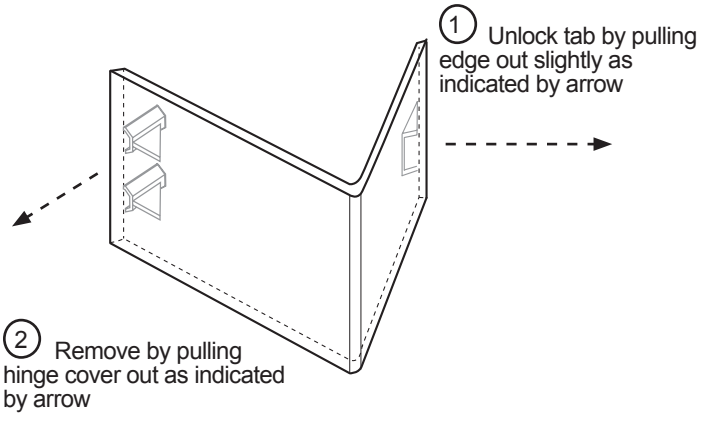

Figure 7-8. —Hinge cover —right side shown

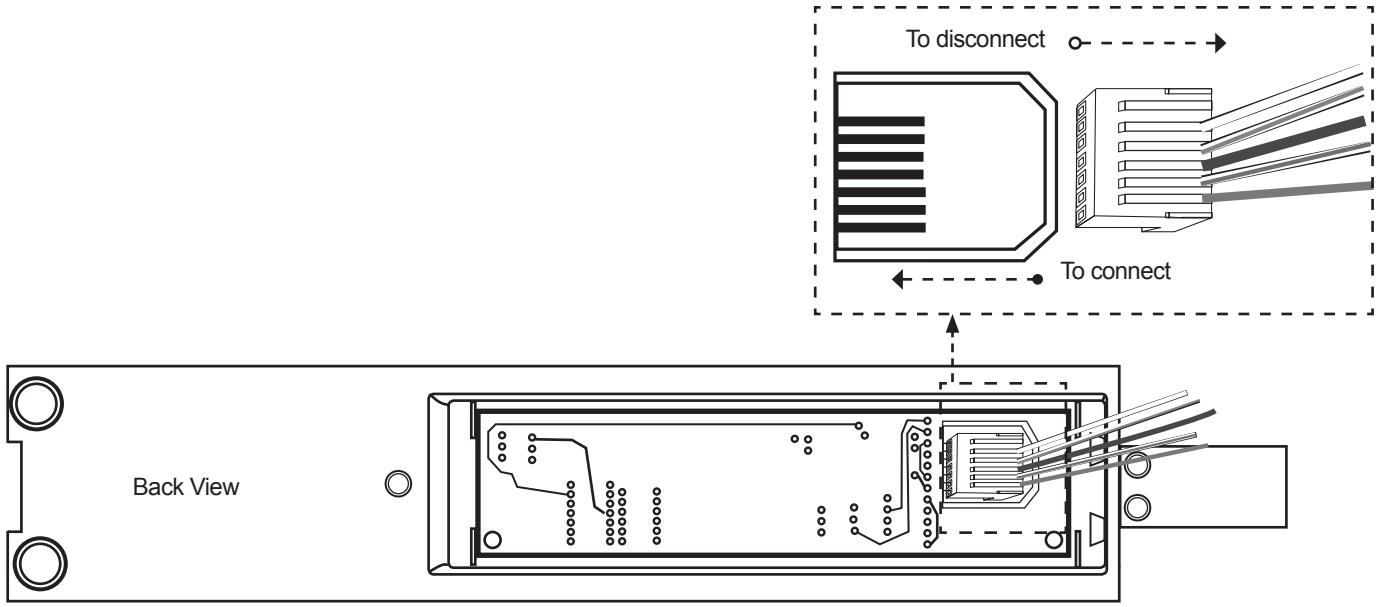

Figure 7-9. —Harness connector —Optical control display circuit board.

Power board replacement procedure

Tools:

1/4" nut driver

Anti-static wrist strap

Removal of existing power board.

1. Power OFF the refrigerator.
2. Power OFF the RV DC power to the refrigerator.

For steps 3, 4, and 5 see Figure 7-10, page 59.

3. Unplug the AC power cord at the RV AC receptacle and at the power board.
4. Disconnect DC power supply wires at power board terminals 12VDC and GND.
5. Disconnect the spark/sense electrode wire.
6. Remove the power board cover. See Figure 7-11, page 59.

   a. Remove two 8-32 x 1" hex head screws.

   b. Pull the cover off the power board.

For steps 7, 8, 9, 10, See Figure 7-12, page 60.

7. Disconnect the AC heater wires at power board:

   a. Black wires at terminals AC_HT_LO and AC_HT_LO2

   b. Yellow wires at terminals AC_HT_HI and AC_HT_HI2.

8. Disconnect the high temperature limit switch wire leads terminals LIMIT IN and LIMIT OUT.
9. Disconnect the wire harness connector at terminal P1.
10. Disconnect the wire harness connector at terminal P2.
12. Remove the existing power board from the base and install the replacement power board. See Figure 7-13, page 60.
13. Reverse steps 12 through 1 to complete installation.

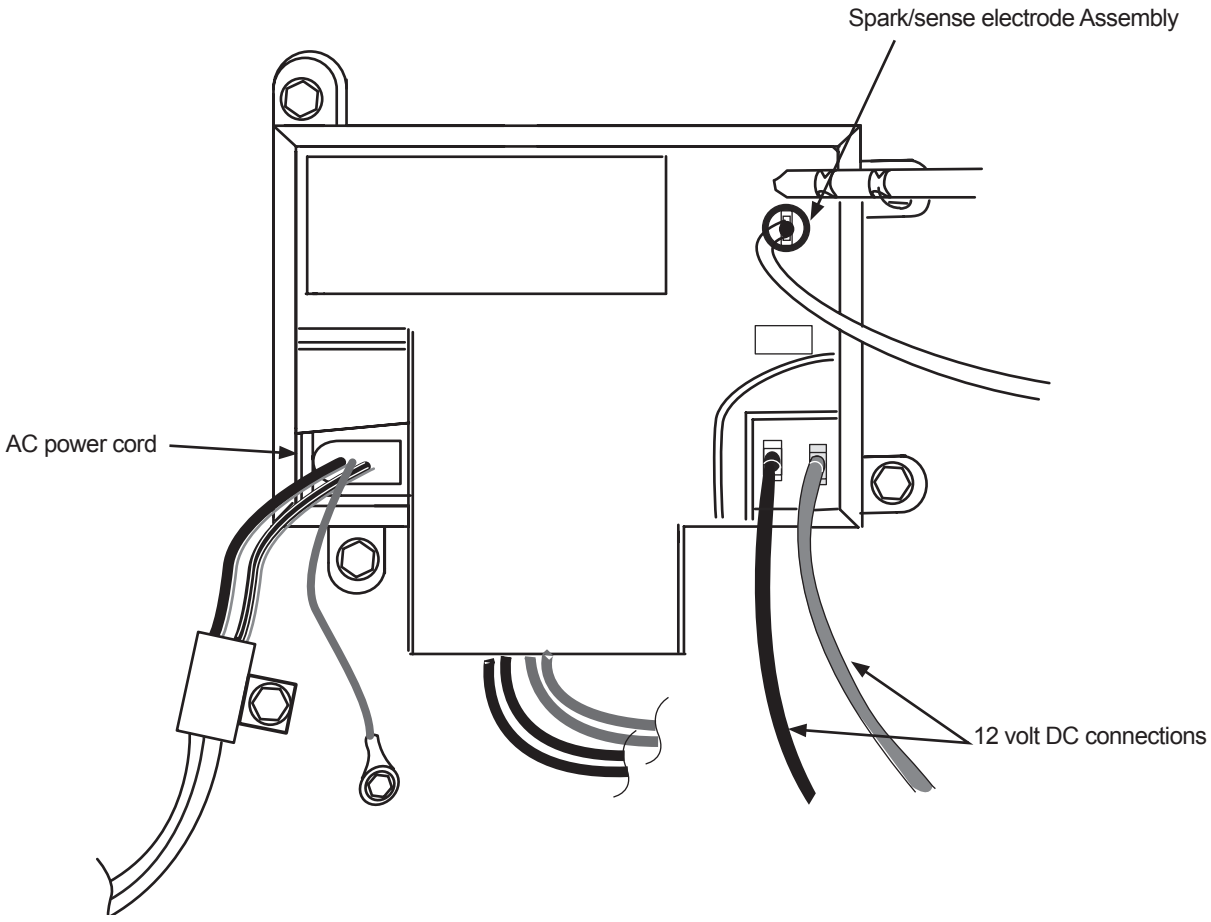

Figure 7-10. Power board external connections.

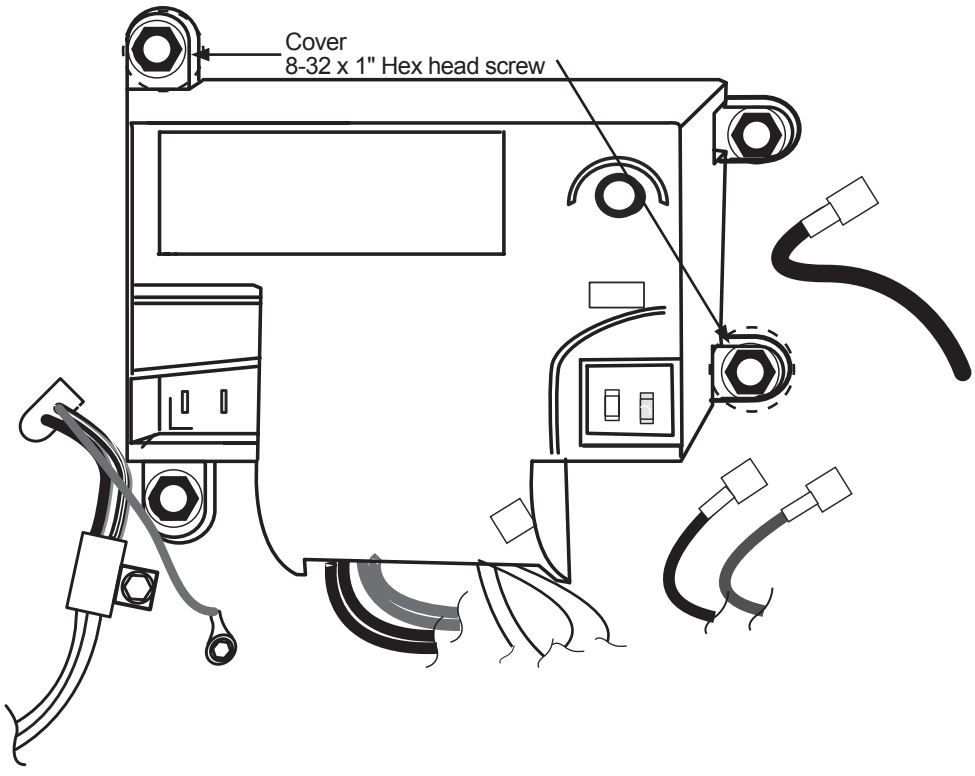

Figure 7-11. Cover retaining screws location.

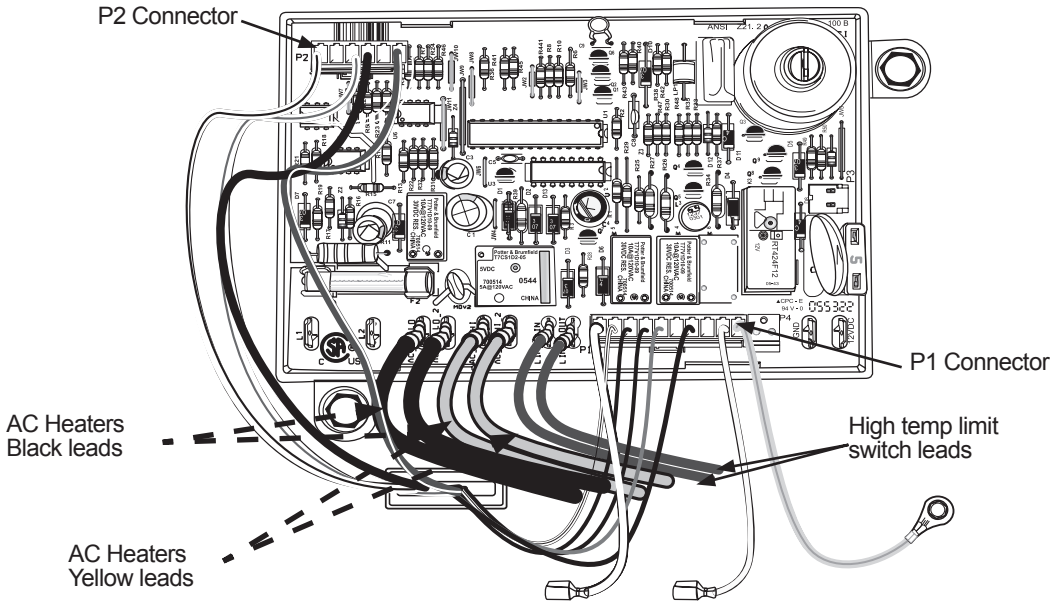

Figure 7-12. Power board internal connections.

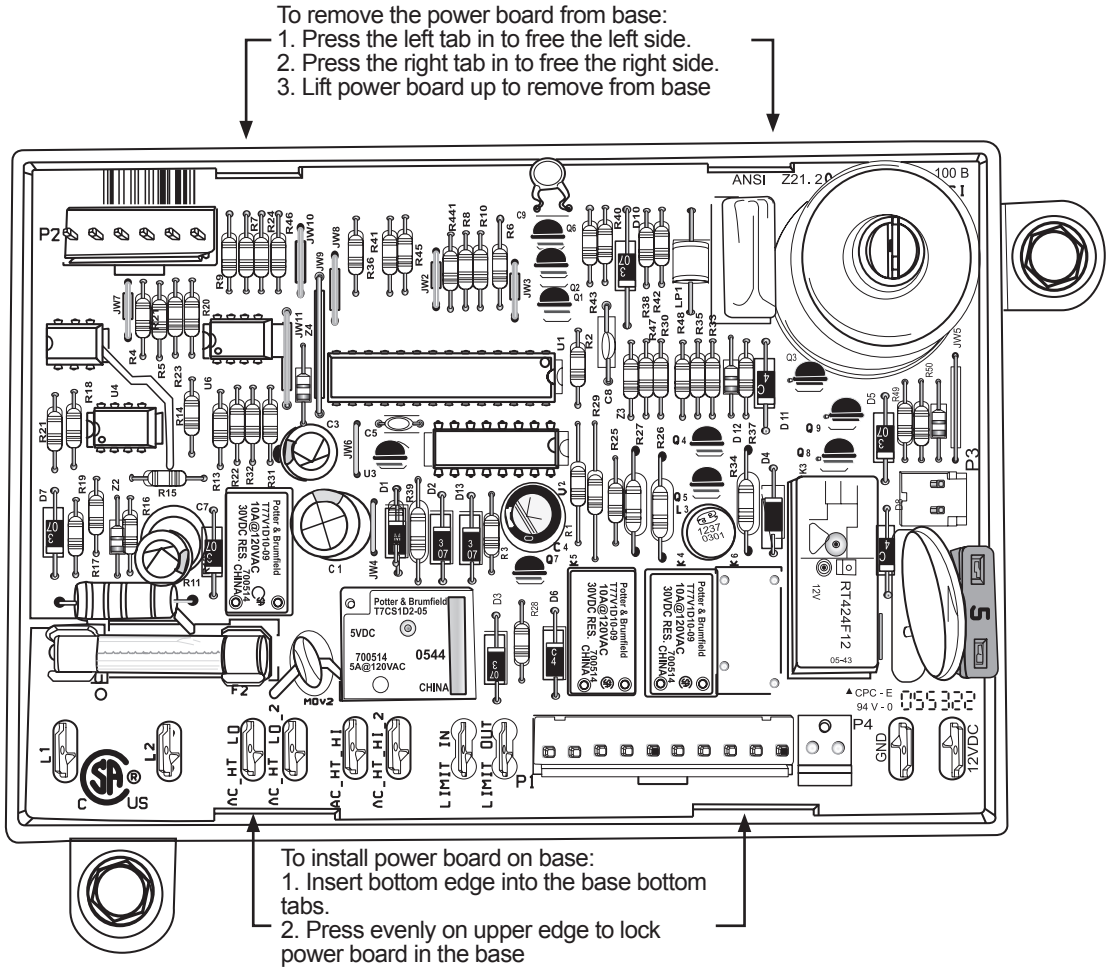

Figure 7-13. Power board, removal / installation.

SECTION 8 —COOLING SYSTEM

The cooling system is a sealed gas absorption refrigeration system charged with R 707 refrigerant.

NOTE

R 707 refrigerant contains anhydrous ammonia, water, and hydrogen. The refrigerant also contains sodium chromate, a corrosion inhibitor.

Optimal cooling system efficiency requires controlled heat application, sufficient air flow to remove heat and for combustion air, and leveled operation.

Leveled Operation

Cooling system efficiency is not affected when the vehicle is in motion. When parked, off-level operation should not exceed three (3) degrees from side-to-side and/or six (6) degrees front-to-back at the refrigerator.

Poor cooling

Poor cooling may be the result of one or a combination of the following:

- Insufficient or obstructed ventilation.
- Low AC voltage.
- AC heater failure.
- Low propane pressure.
- Dirty burner.
- Fan failure
- Dirty flue.
- Blocked or jammed heat deflector cap.
- Operation over maximum off-level limits.
- Inadequate repairs.
- Unauthorized modifications.

Insufficient or obstructed ventilation

Insufficient or obstructed ventilation reduces cooling efficiency because the heat load generated and dissipated by the system is not efficiently removed.

To maintain cooling efficiency cooling air has to flow freely over the external walls of the absorber coils and over the condenser fins. When ventilation is suspected of being the cause of poor cooling, make sure that:

- Air intake vent and exhaust vent are clear.
- Vents have are not covered with insect screen, plastic sheeting, leaves or a birds nest.
- Loose insulation is not blocking air flow over the condenser or absorber or the flue opening.
- Both fans are working.
- DC voltage is 10.5 VDC or higher.

Low AC voltage

Two 225 Watt AC heaters generate the heat load required to turn liquid ammonia into vapor. To accomplish this task voltage has to be maintained between 108 and 132 volts..

AC heater failure

One AC heater failure causes the system to operate at half the heat input required. The heat output of one heater is insufficient to generate the ammonia vapor required.

Low propane pressure

Propane pressure of 10.5 to 11.5 in. w. c. is needed to generate the required heat output required for proper gas mode operation.

Dirty burner

A dirty burner affects the heat output. Under normal conditions the burner and flue need to be checked and cleaned annually.

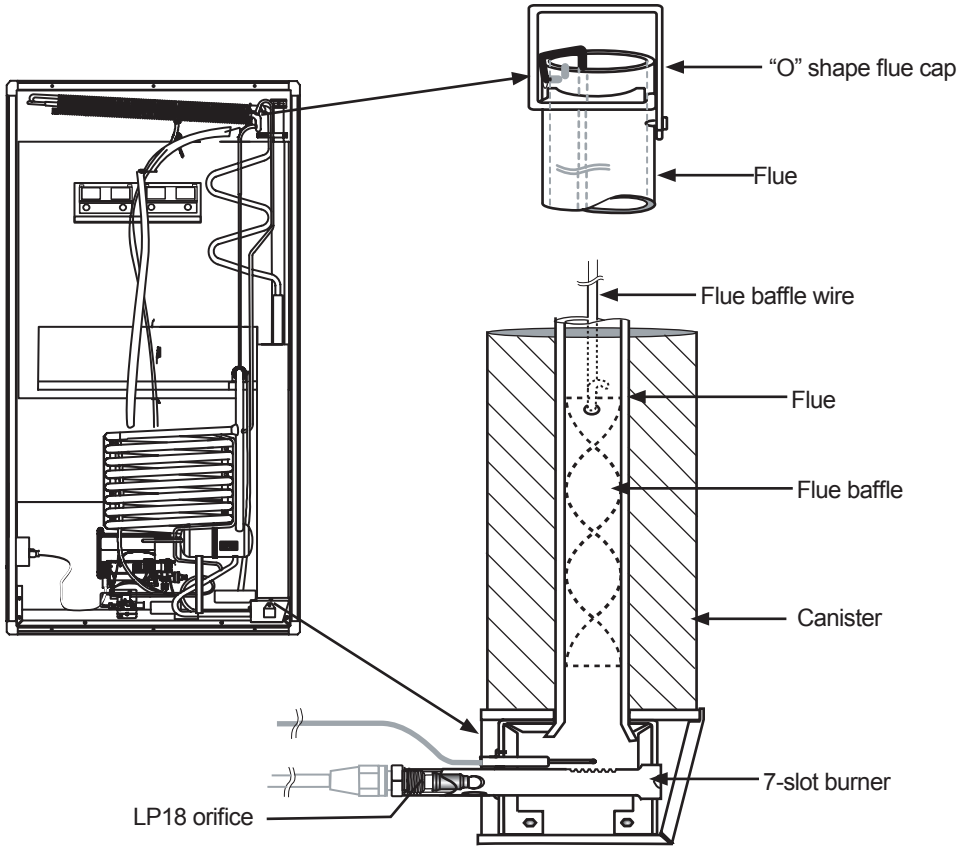

Figure 8-1. —Flue and associated components.

Fan failure

The fans enhance ventilation when ambient temperature is 90 degrees Fahrenheit (32.2 degrees Celsius) or higher. A failed fan will result in insufficient heat removal.

Dirty flue

A dirty flue restricts the flame from drawing the right amount of secondary combustion air. Little or no secondary combustion air will cause a weak or lazy flame. A partial view of the flue and spiral baffle is illustrated in Figure 8-1.

Blocked or jammed flue cap

A flue cap that is blocked with insulation and or jammed against the flue opening restricts the flow of exhaust gases from the burner box. The flue cap location is illustrated in Figure 8-1.

Operation over maximum leveled limits

The refrigeration cycle works on gravity flow. Exceeding off-level limits during operation affects the flow of refrigerant through the system.

Inadequate repairs

Inadequate repairs that may result in poor cooling include:

- Failure to properly seal the cooling system to the cabinet.
- Failure to seal the drip tube penetration.
- Altering the angle of the condenser.

Unauthorized modifications

Unauthorized modifications include:

- Removal of enclosure baffles.
- Removal of insulating canister
- Installation of insect screen over intake and/or exhaust vent openings
- By-passing or tampering with the control.
- Relocation of fans and/or thermostatic switch.

Cooling System Monitoring

The cooling system monitoring control monitors the cooling performance through the thermistor.

Monitoring is active when fin temperature (second fin from right on fin assembly) is higher than 50 degrees Fahrenheit (10 degrees Celsius) and the controls are call for cooling. The initial fin temperature monitoring period is 120 minutes (2 hours) with temperature samples taken at 10 minute intervals.

If the cooling system monitoring does not sense a drop in fin temperature (approximately 1 degree Fahrenheit or 0.56 degree Celsius) in two hours, it powers off the active heat source for 10 minutes. After the end of the 10 minute rest period, the system powers on the heat source for another 40 minutes.

During the 40 minutes monitoring period, the cooling system monitoring samples fin temperature every 10 minutes for a drop in fin temperature.

If fin temperature remains above 50 degrees Fahrenheit (10 degrees Celsius), the cooling system monitoring records the fault in non volatile memory. Figure 8-2 illustrates the fault segment that appears in diagnostic mode screen 5. See Section 9 for ***Diagnostics*** information.

Cooling system monitoring is inactive when fin temperature is 50 degrees Fahrenheit (10 degrees Celsius) or lower. It does not activate when:

- Fin temperature is below 50 degrees Fahrenheit (10 degrees Celsius)
- The thermistor is disconnected from the circuit, is open (no resistance), or is shorted.
- Either one or both of the fresh food compartment doors is sensed open. *Sampling resumes 10 minutes after the door is closed.*
- Both AC heaters failed open.
- AC voltage is lower than 108 volts AC.
- Fin frost management active.

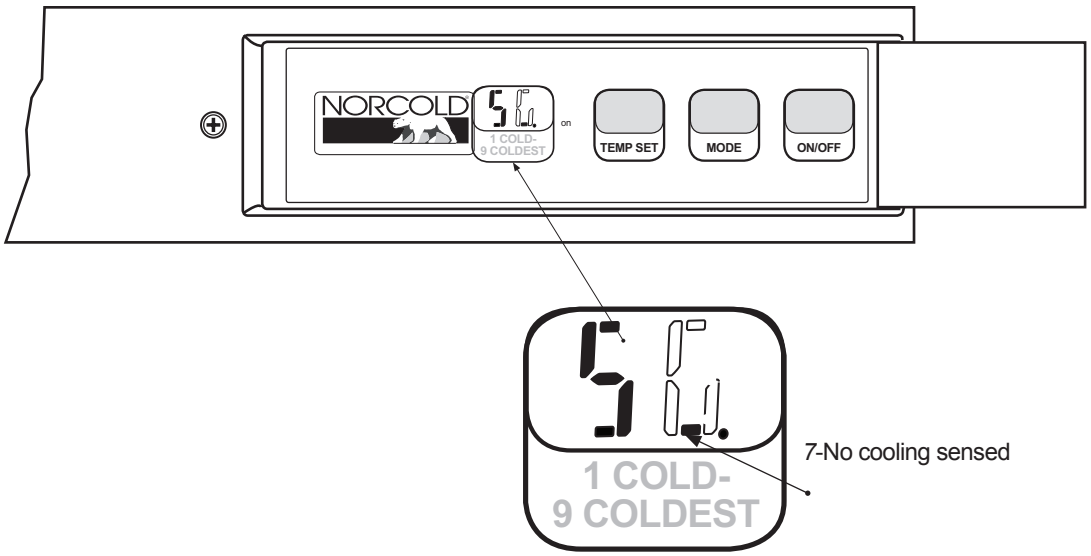

Figure 8-2. —Diagnostic screen 5, segment 7, no cooling sensed.

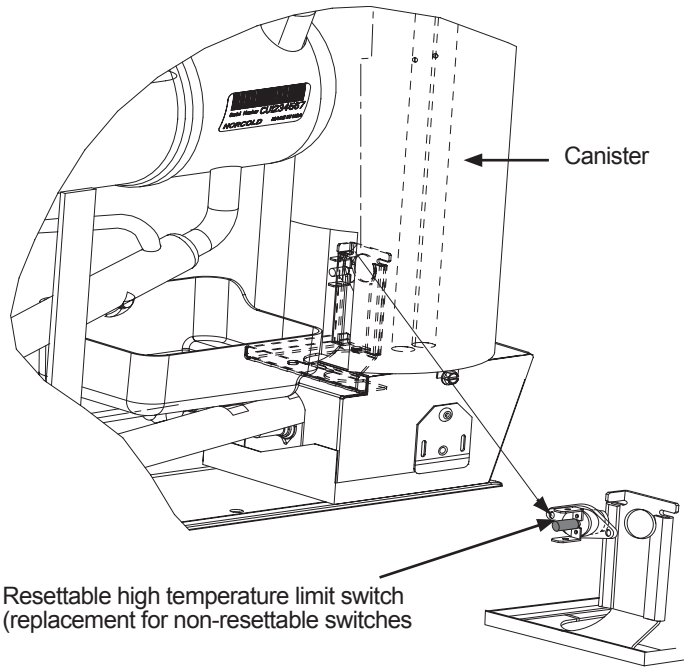

Figure 8-3. —Location of original high temperature limit switch (resettable switch shown).

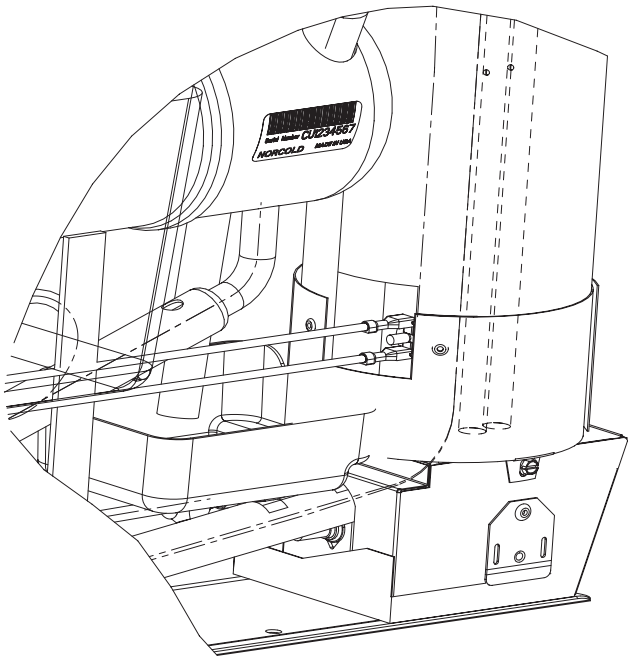

Figure 8-4. —The present configuration of the high temperature limit switch.

High Temperature Monitor System

The purpose of the high temperature monitor system is to prevent damage to the cooling unit due to an overheating condition in the boiler.

An overheating condition may be cause by one or a combination of the following:

- ↘ Insufficient or obstructed ventilation.
- ↘ Inadequate installation in enclosure.
- ↘ Heat deflector cap blocked by insulation.
- ↘ Heat deflector cap jammed against flue opening.
- ↘ Exceeding off-level limits.
- ↘ Operation with two heat sources active.
- ↘ Cooling unit blockage.

The high temperature limit switch acts as a temperature supervising device. This switch is positioned near the boiler to provide the best possible monitoring of temperature. Figure 8-3 illustrates the original high temperature limit switch configuration with a resettable switch. Figure 8-4 illustrates the present configuration of the high temperature limit switch at the time of this publication.

If the boiler normal operating temperature begins to rise to an abnormal level, the electrical contact in the switch opens to prevent the boiler from overheating.

The controls are programmed to detect when the switch is open. If the switch is open or not connected to power board terminals LIMIT IN and LIMIT OUT, the controls;

- ↘ Fault code oP L1 displays
- ↘ Stop AC and LP gas operation.
- ↘ Record fault in non-volatile memory.

Cooling Unit Testing

The cooling System Diagnostic Flowchart on page 66 through page 67 provides sequential steps to troubleshoot the cooling system. Before attempting to replace the cooling system:

1. Make sure the conditions listed in Cooling System Replacement section are met.
2. Power on the refrigerator.
3. Set MODE to the AC manual mode or the LP manual mode.
4. Set TEMP SET to setting 9 (coldest).
5. Place digital thermometer probe or thermometer immersed in a container of water on the left freezer shelf, against the evaporator plate.
6. Power off the ice maker -units with ice makers
7. Set the controls to Diagnostics.
   a. Navigate to screen 3, fin temperature.
   b. Record time and fin temperature.
8. Allow the refrigerator to operate for eight hours with all doors fully closed.

Replace cooling unit when all of the following are met.

1. No temperature change in Diagnostics mode screen 3.
2. The no cooling fault stored in Diagnostics mode screen 5, (segment 7).
3. High temperature limit switch is open and fault L1 oP displays.
4. The leveling chamber is extremely hot and absorber coils are at ambient temperature (approximately).

Cooling System Replacement

The cooling system has to be tested for proper operation. Test results need to show that both the freezer and the fresh food cabinet do not cool in AUTO mode, AC manual mode or in LP manual mode. Before attempting to test the cooling unit make sure:

- ↘ The refrigerator is leveled.
- ↘ DC voltage input to power board is 10.5 to 15.4 volts.
- ↘ AC voltage input to power board is 108 to 132 volts.
- ↘ Both AC heaters draw amperage.
- ↘ Gas pressure is 10.5 to 11.5 in. w. c.
- ↘ The burner and the orifice are clean.
- ↘ Flame appearance normal.
- ↘ The flue is clean.
- ↘ The flue baffle installed.
- ↘ Ventilation is correct.
- ↘ Intake vent is clear.
- ↘ Exhaust vent is clear.
- ↘ Both fans are operational.
- ↘ Door gaskets are in good condition.
- ↘ Doors are properly aligned.
- ↘ Thermistor on the proper fin.
- ↘ High temperature limit switch open.
- ↘ No cooling fault code stored in Diagnostics, screen 5. See Figure 8-2, page 63.

Cooling System Diagnostic Flowchart

WARNING

Do not bypass or modify the refrigerator controls. Do not wire the heater directly. Heaters are supplied power through a fused circuit.

WARNING

Do not power ON the refrigerator if the cooling system has a leak or is suspected of having a leak.

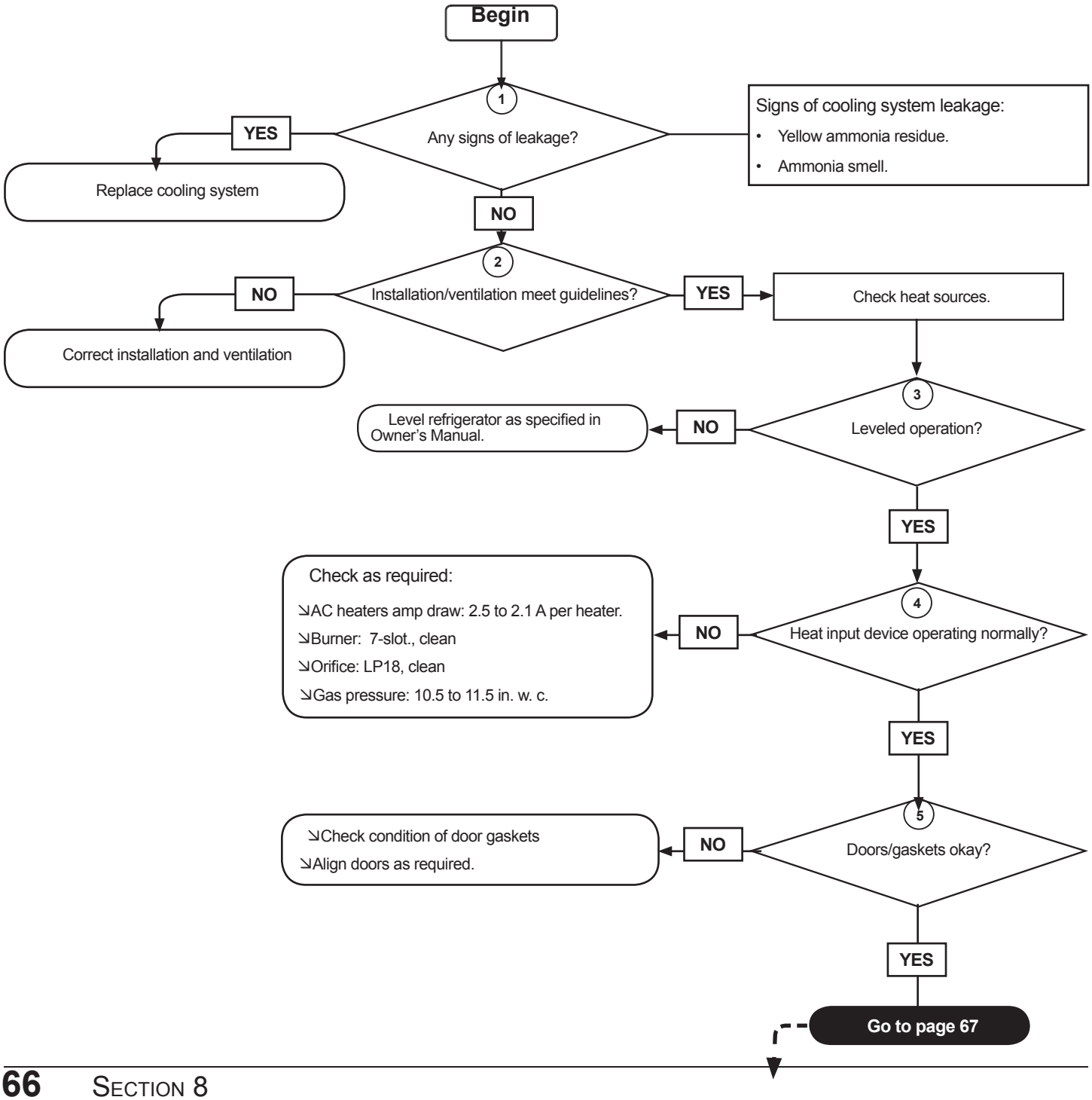

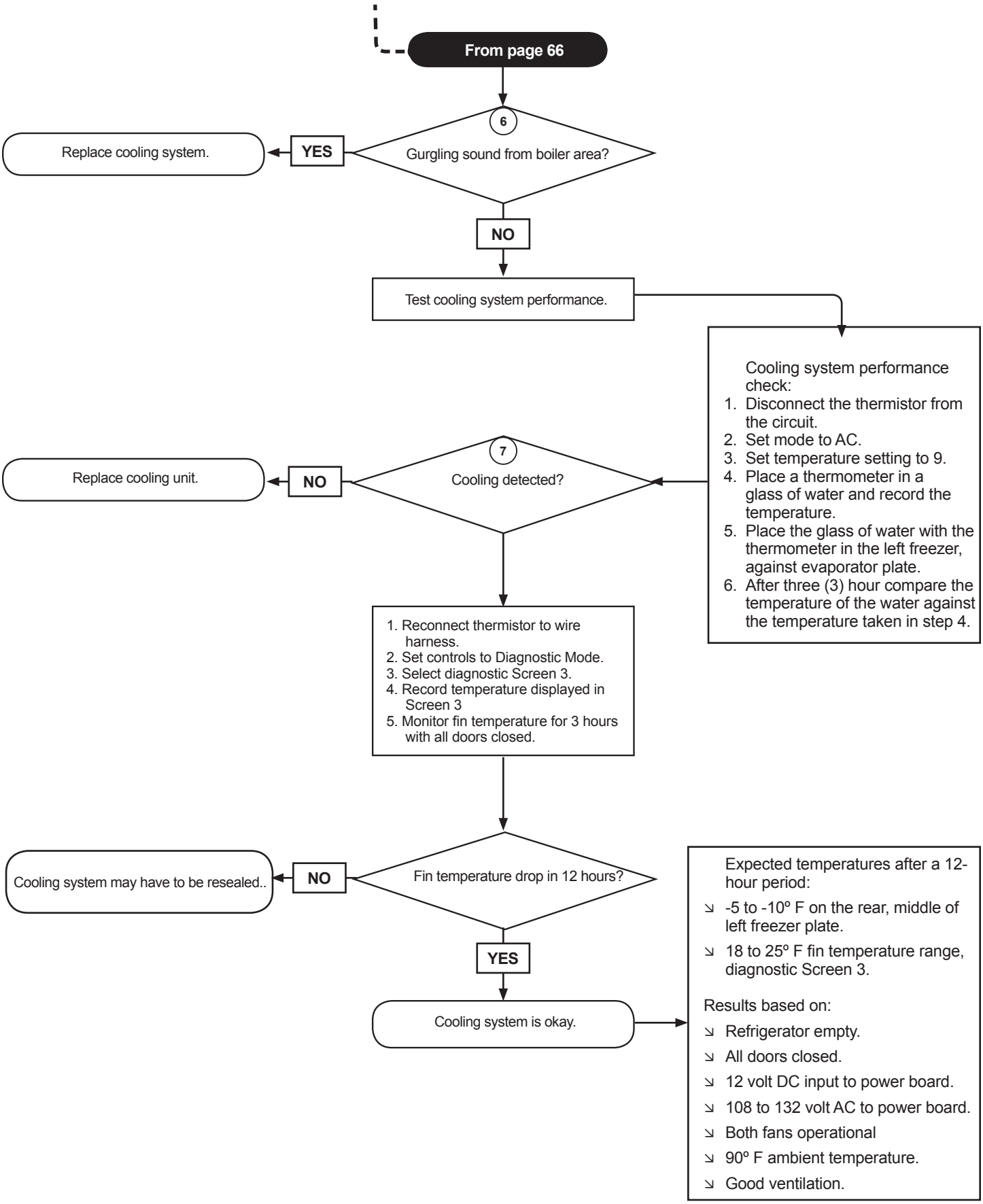
From page 66
6
Gurgling sound from boiler area?
YES
Replace cooling system.
NO
Test cooling system performance.
Cooling system performance check:
1. Disconnect the thermistor from the circuit.
2. Set mode to AC.
3. Set temperature setting to 9.
4. Place a thermometer in a glass of water and record the temperature.
5. Place the glass of water with the thermometer in the left freezer, against evaporator plate.
6. After three (3) hour compare the temperature of the water against the temperature taken in step 4.
7
Cooling detected?
NO
Replace cooling unit.
1. Reconnect thermistor to wire harness.
2. Set controls to Diagnostic Mode.
3. Select diagnostic Screen 3.
4. Record temperature displayed in Screen 3
5. Monitor fin temperature for 3 hours with all doors closed.
Fin temperature drop in 12 hours?
NO
Cooling system may have to be resealed..
YES
Cooling system is okay.
Expected temperatures after a 12-hour period:
↘ -5 to -10º F on the rear, middle of left freezer plate.
↘ 18 to 25º F fin temperature range, diagnostic Screen 3.
Results based on:
↘ Refrigerator empty.
↘ All doors closed.
↘ 12 volt DC input to power board.
↘ 108 to 132 volt AC to power board.
↘ Both fans operational
↘ 90º F ambient temperature.
↘ Good ventilation.

Cooling System Removal

◀IMPORTANT▶

Cooling system replacement requires removing the refrigerator from the enclosure.

It is not possible to anticipate all of the RV manufacturers enclosure design or refrigerator installations practices.

Always, double check for additional screws and brackets before attempting to remove the refrigerator from the enclosure as certain RV manufacturers may install additional brackets or screws to secure the top and the sides of the refrigerator to the enclosure.

Tools:

1/4" nut driver

5/16" nut driver

7/16" open end wrench

9/16" open end wrench

5/8" open-end wrench

#2 Phillips screwdriver

1. Remove left and the right freezer evaporator plate bolts along with the washers.
2. Remove seven bolts from fin assembly.
3. Unclip the thermistor from the fin assembly.

—Water dispenser units

a. Remove the paddle assembly.
b. Remove the water dispenser cover.
c. Disconnect the spigot.
d. Disconnect the wiring and remove the bracket containing the LED board, spigot, and switch as an assembly.

⚠ CAUTION

Protect the front of the refrigerator! Cover the floor with a moving blanket/pad or similar soft material to protect the floor as well as the refrigerator doors panels and optical display when the refrigerator is laid down on the floor.

4. With the assistance of an able person, lay the refrigerator on the floor doors side down.
5. Disconnect and remove the water valve assembly. See Section 10 for information on the ice maker water valve and the ice maker/ water dispenser water valve.

⚠ WARNING

Always use two wrenches to loosen or tighten fittings to prevent damaging components, piping, or fittings. Damaged components, piping, or fittings create the potential for gas leaks.

6. Disconnect and remove the gas valve assembly (with bracket). See Section 5 for information on gas valve connections and fittings.
7. Disconnect and remove the spark/sense electrode assembly.
8. Remove the power board cover then disconnect the AC heaters leads and the high temperature limit switch leads.
9. Disconnect and remove fans.
10. Disconnect fan wiring from thermostatic switch and remove switch.

For steps 11 through 15 refer to Figure 8-5 on page 70.

11. Remove wire ties that hold wire protector to cooling unit plug.
12. Remove permagum sealer from drain hose opening. Save for reinstallation.
13. Cut the tape along the four edges of the cooling unit back wrapper.
14. Remove condenser bracket screws (2).
15. Remove absorber bracket screws (2).
16. Lift absorber coil just enough to move wiring and ice maker water line (if present) out to the side of the cabinet.

⚠ WARNING

Do not attempt to pull the cooling unit out of the enclosure without the assistance of an able person. Attempting to pull the cooling unit without additional help may cause personal injury and/or extensive property damage.

17. With the help of an able person lift the cooing unit out of the cabinet.
18. Remove all thermal sealant from the cabinet steps and freezer plates.
19. Remove all thermal sealant from the evaporator coils and plug.

Applying Thermal Mastic Sealant

⚠ CAUTION

Use only NORCOLD approved Thermal Mastic sealant (part number 61450740). Do not use silicon, latex or petroleum base sealant. Silicone, latex and petroleum-sealants may damage the cabinet and/or cooling system foam plug, greatly reducing cooling efficiency.

Sealing the cooling unit to the cabinet requires all three tubes of Thermal Mastic sealant supplied with the replacement cooling unit. Each tube tip must be cut wide to dispense a bead approximately no wider than 3/4 inch wide.

◀IMPORTANT▶

Apply the sealant as outlined in the following steps. Failure to apply the sealant as outlined will result in poor cooling performance.

1. Apply a 3/4 inch wide x 1/2 inch thick bead of Thermal Mastic sealant to the evaporator section of the cooling system as shown in Figure 8-6, page 71.
2. Apply 3/4 inch wide x 1/2 inch thick bead of Thermal Mastic sealant on the four sides of the cabinet opening. See Figure 8-7, page 71.

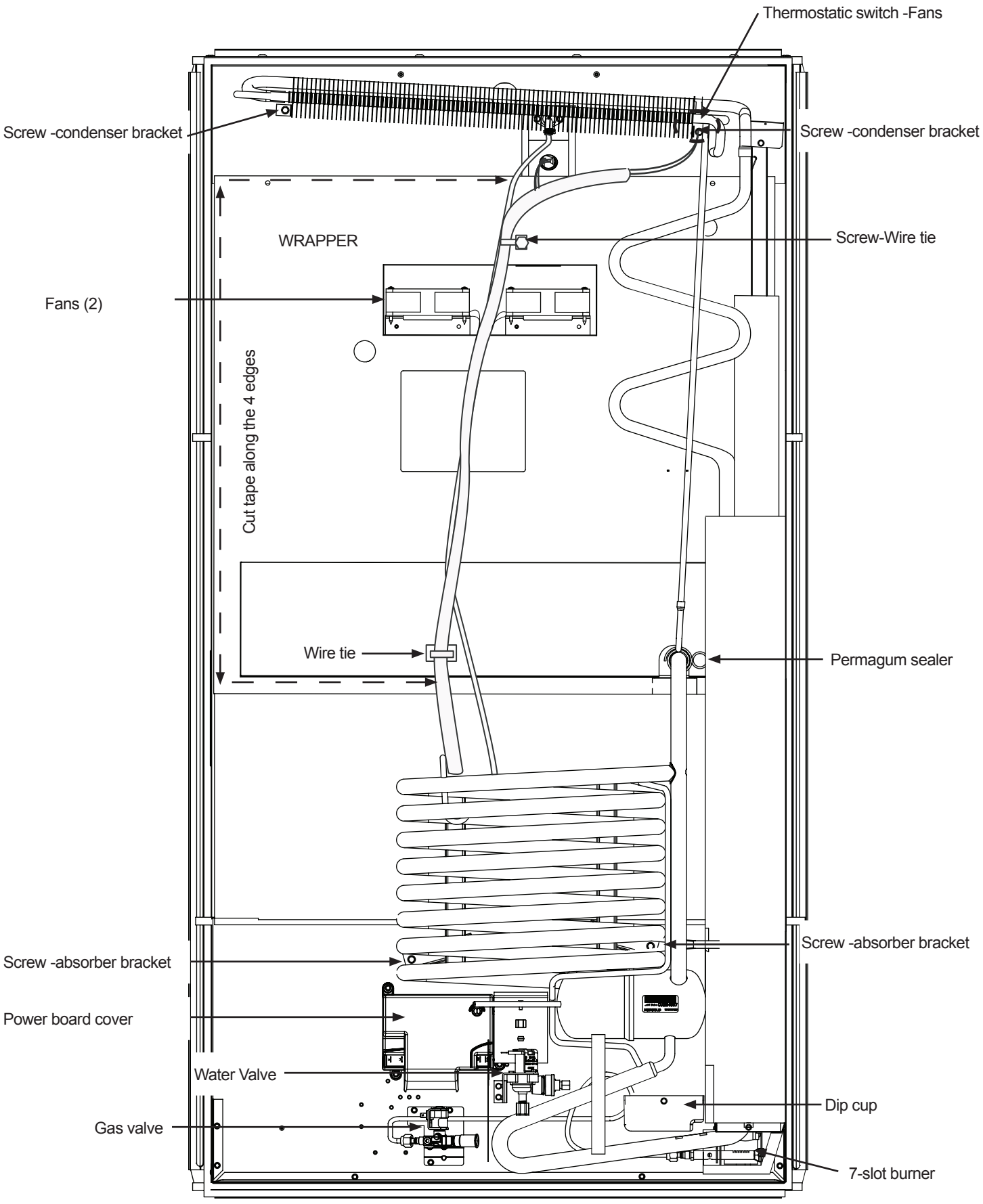

Figure 8-5. —Cooling unit component location -Lower Section.

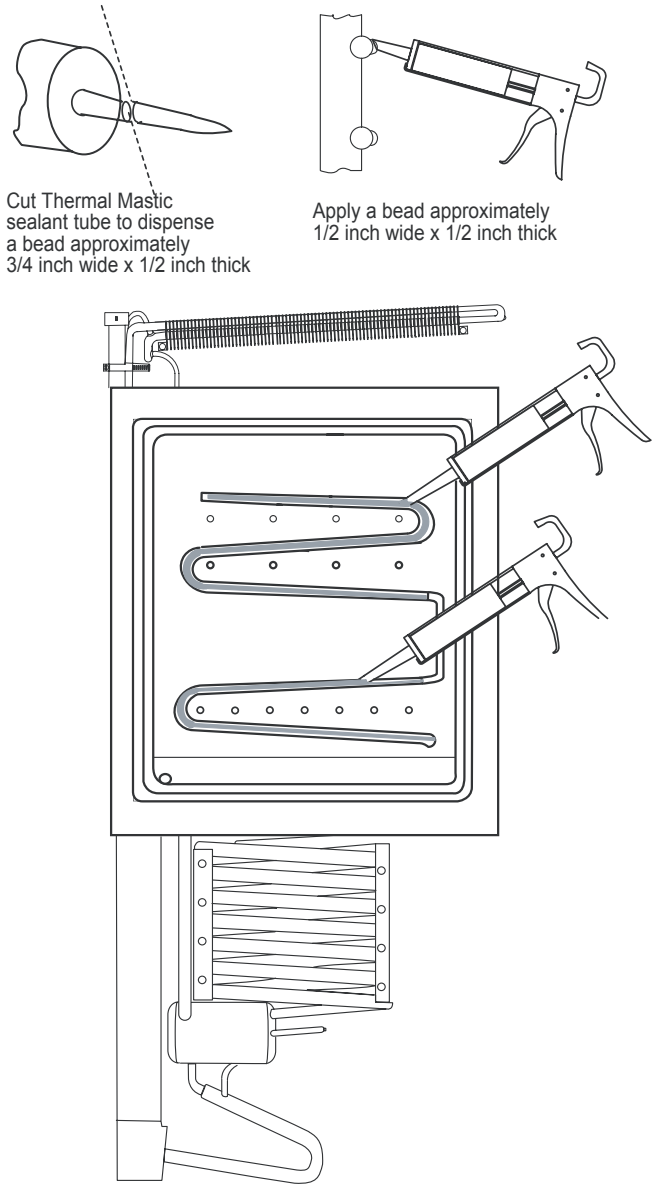

Figure 8-6. —Sealant application on evaporators.

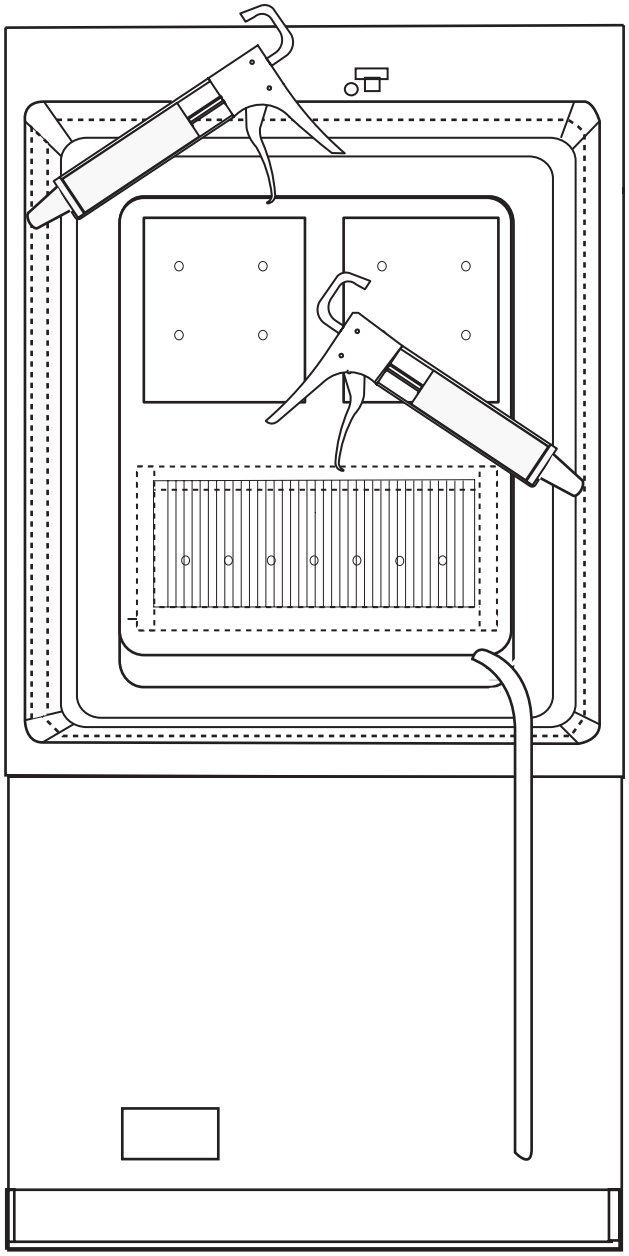

Figure 8-7. —Sealant application on cabinet opening sides.

Installing Cooling Unit into Cabinet

1. Make sure the ice maker water line, wiring, and fan wiring are out of the way on the opposite side of the flue tube.

⚠ WARNING

Do not attempt to install cooling unit in the the enclosure without the assistance of an able person. Attempting the installation without additional help may cause personal injury and/or extensive property damage.

2. Carefully lift the cooling system and align same over the cabinet opening.
3. Have an assistant insert the drain hose through the drain hose opening, then hold the hose straight up.
4. Lower foam plug evenly into the cabinet opening.
5. Seat the cooling unit firmly into the cabinet by applying even pressure over the wrapper.
6. Place the ice maker water tube (IM models), and wiring between the cabinet and absorber coils.

7. Install condenser brackets screws. Tighten each screw 15 to 20 inch-pound.
8. Install the absorber coil brackets screws. Tighten each screw 15 to 20 inch-pound.
9. Tape the four edges of the foam plug wrapper to the cabinet with two inch wide adhesive backed HVAC aluminum tape or poly mask sealing tape.
10. Make sure heat deflector cap is firmly on the flue tube.
11. Install and rewire the fans thermostatic switch.
12. Install and rewire fans.
13. Connect the AC heaters wires to the power board.
14. Connect the high temperature limit switch to the power board.
15. Install power board cover.
16. Install spark/sense electrode assembly.

WARNING

Always use two wrenches to loosen or tighten fittings to prevent damaging components, piping, or fittings. Damaged components, piping, or fittings create the potential for gas leaks.

17. Install the gas valve and burner assembly.
18. Install the burner box cover.
19. Install the drip cup.
20. Install the ice maker water valve (IM models), then reconnect wiring and tubing.
21. Install cable ties on wiring protector.
22. Cover the drain hose penetration with Permagum sealer..

WARNING

Do not attempt to upright the refrigerator without the assistance of an able person. Up righting without additional help may cause personal injury and/or extensive property damage.

23. Upright the refrigerator.
24. Install the freezers evaporator plate screws along with flat washers. Tighten each screw 30 to 55 in-pound.
25. Install the fin assembly screws. Tighten each screw 30 to 55 inch-pounds.
26. Attach the thermistor to the second fin (counting from the right).

Checking for gas leaks after installation

After installing the refrigerator in the enclosure and connecting RV propane supply line to the gas valve.

1. Connect 12 volt DC to the power board.
2. Plug the AC power cords to the RV outlets.
3. Open the LP gas container gas valve
4. Leak check the gas valve connection. No leaks allowed.
5. Power on refrigerator, then select LP manual mode operation.
6. Leak check all of the refrigerator gas connections. No leaks allowed.
7. Place refrigerator in service.

SECTION 9 —DIAGNOSTICS

Diagnostic Mode

The diagnostic mode is a tool incorporated in the controls. This tool is designed to assist in verifying temperature, inputs, outputs, and to retrieve recorded fault stored by the controls. The diagnostic mode has ten diagnostic channels commonly known as “screens”.

Each screen has a particular function. For example, “screen three (3) displays fin temperature, and screens four (4) and five (5) display stored fault history.

The optical control display employs dual 7-segment LED displays to show information. The screen number always shows in the left side of the display.

Illuminated segments to the right side of screen number provide stored fault history, inputs, outputs and voltage status. Figure 91 shows the screen number location and LED segments numbering.

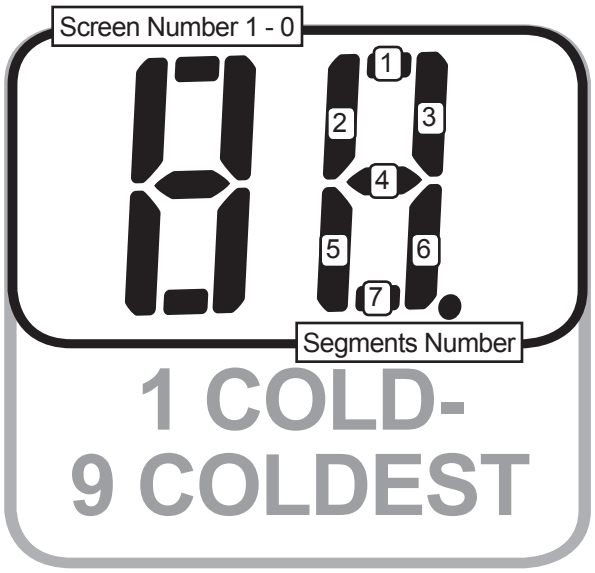

Figure 9-1. —Optical control display screen and segments numbering.

Setting Display to Diagnostics

To set the display to diagnostics:

1. Press and hold down the MODE and SET TEMP switch buttons at the same time.
2. Release the switch buttons when 1 (1 COLD- 9 COLDEST) displays.
3. Within two seconds 88 (1 COLD- 9 COLDEST) displays on the screen.

Displaying screens 2 through 0 (1 COLD- 9 COLDEST):

1. Press the MODE button.
2. Release the switch button when the next or the desired screen number displays.

Returning the Display to Normal Mode:

1. Press and hold down the MODE and SET TEMP switch buttons at the same time.
2. Release the switch buttons when the active operation mode displays.

NOTE

Powering the refrigerator OFF and back ON also returns the optical control display to its normal display mode.

Diagnostic Screens Information

Screen 1. All Diagnostics LED On

Confirms display is set to Diagnostics. Within five seconds the screen number is replaced by 88. All LED segments should be lit.



Replace the optical control display assembly if any segment fails to light.

Pressing the MODE switch button displays screen 2.

Screen 2. All Diagnostics LED Off

The screen number displays and within five seconds it turns off . Only the ON LED should remain lit.

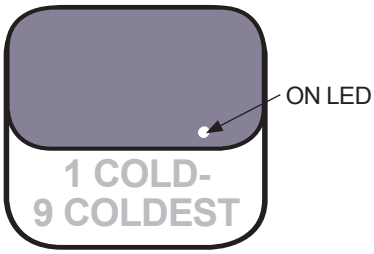

Replace the optical control display assembly if any other segment is lit.

Pressing the MODE switch button displays screen 3.

Screen 3. Fin Temperature

Displays fin temperature as sensed by the temperature sensing circuit through the thermistor. **This is not freezer or fresh food cabinet air temperature.**

The example illustrated below shows 30 degrees Fahrenheit (1 degree Celsius) fin temperature.



An open or shorted thermistor displays 00 as illustrated below.



Pressing the MODE switch button displays screen 4.

Screen 4. Stored Fault History

The first of two stored fault history screens. It displays stored fault history using lit LED segments. Segments fault descriptions are illustrated below.

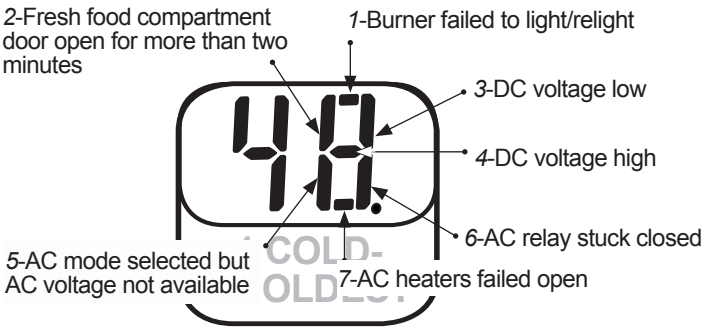

Pressing the MODE switch button displays screen 5.

Screen 5. Stored Fault History

The second of two stored fault history screens. It displays stored fault history using lit LED segments. Segments fault descriptions are illustrated below.

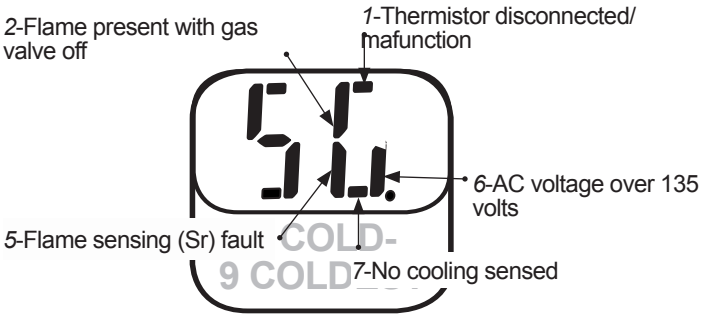

◀IMPORTANT▶

Segment 5: The fault is logged in any operating mode if any of the following occurs:

1. Problem in gas sense circuitry (hardware).
2. Gas valve drive circuit present when it is not supposed to be.
3. Gas valve drive circuit is not present when it is supposed to be.
4. Internal memory fault.

Segment 6: The fault is logged anytime AC voltage rises over 135 volts.

Segment 7: The high temperature limit switch opens when overheating is sensed in the cooling unit boiler area. The system sensing algorithm still present and will sense a “no cool” condition, however it will not lock out heat sources or display the “no” “co” fault code in normal display mode.

Pressing the MODE switch button displays screen 6.

Screen 6. Clear Stored Fault History

This screen is used to erase stored fault history from screens four and five. To clear fault history:

1. Screen shows Er.
2. Press and hold the SET TEMP switch button until CL. appears on the screen.
3. Wait five seconds.
4. Press and hold down the SET TEMP button until Er. appears on the screen.

Pressing the MODE switch button displays screen 7.

Screen 7. Power Board Inputs

Displays “live” power board inputs through lit LED segments. The assigned LED segments and information are illustrated below.

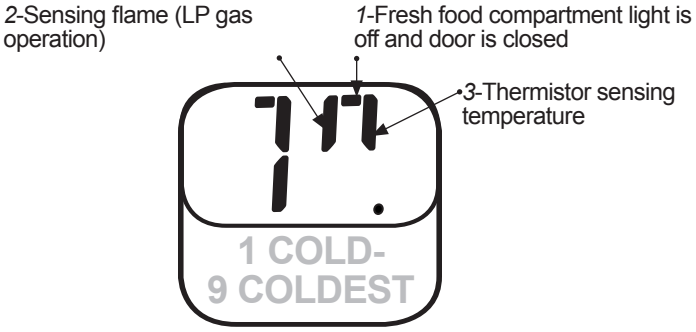

Pressing the MODE switch button displays screen 8.

Screen 8. Power Board Outputs

Displays “live” power board outputs through lit LED segments. The assigned LED segments and information are illustrated below.

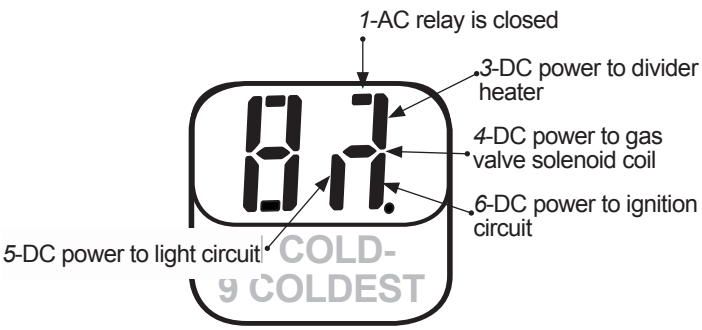

Pressing the MODE switch button displays screen 9.

Screen 9. DC Voltage Input

Displays DC voltage input to power board through lit LED segment. The assigned LED segments and information are illustrated below.

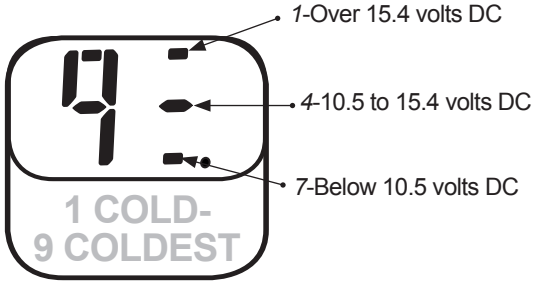

Pressing the MODE switch button displays screen 0.

Screen 0. AC Voltage Input

Displays AC voltage input to power board through lit LED segment. The assigned LED segments and information are illustrated below.

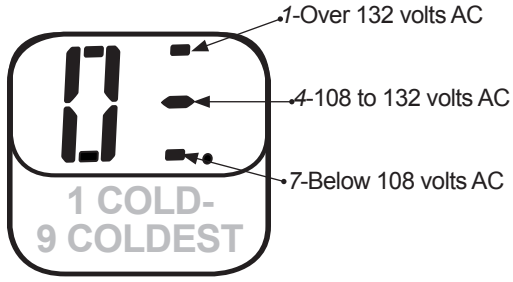

Pressing the MODE switch button displays screen 1.

To return display to AUTO, AC or LP Mode:

1. Press and hold down the MODE and SET TEMP switch buttons at the same time (or power the refrigerator OFF and back ON)
2. Release the switch buttons when the selected operation mode display.

SECTION 10 —ICE MAKER

Ice Maker

The ice maker, illustrated in Figure 10-1, is supplied AC power through a wire harness. It is ON when the shut-off arm is lowered to the down position and OFF when the shut-off arm is raised to the up position.

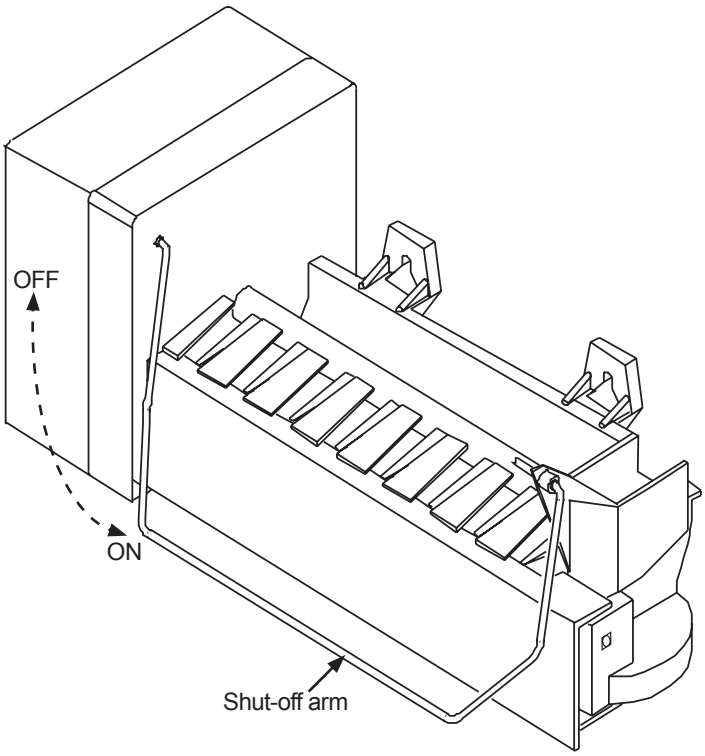

Figure 10-1. —Ice maker.

Specifications

Cycle duration.....3.5 to 7 minutes

Water fill capacity ..... 4.7 fl. oz. (140 mL)

Ice yield .....3.5 lbs/24 hr.. (approximate)

Electrical rating.....185 W @115 VAC/60 Hertz

Amperage (A) draw:

- Cycle on/heater on..... 1.6 A
- Cycle on/heater off..... 0.3 A
- Cycle off.....No amperage draw

Motor ..... 1.5 W/8800 ohms

Mold heater..... 185 W/72 ohms

Operation

The left freezer temperature determines the efficiency of the ice maker. The colder the temperature in the freezer, the faster the water in the mold will freeze.

To harvest the ice the temperature in the freezer needs to be colder than 12 degrees Fahrenheit (-11.1 degrees Celsius).

The thermostat attached to the mold senses the mold temperature. At approximately 17 to 14 degrees Fahrenheit (-8.3 to -10 degrees Celsius) the thermostat energizes the stepper motor and the heater.

As the motor turns the ejector blades begin to make contact with the top of the ice cubes, The motor rotates back and forth causing the blades to exert pressure on the ice cubes as the mold heater warms the bottom of the mold.

Once the ice cubes are freed, the motor continues to turn the ejector, which in turn sweeps the ice cubes out of the mold and into the ice bin. At the same time the shut-off arm begins to swing up, which indicates the end of ice harvesting. This begins a new cycle.

As the ejector blades point to the 12 o'clock position, the water valve opens for approximately seven seconds and refills the mold with approximately 4.7 fluid ounces of water.

After the mold is refilled, the shut-off arm drops to the ON position. When the thermostat senses mold temperature to be 17 to 14 degrees Fahrenheit (-8.3 to -10 degrees Celsius) the cycle starts again.

Ice Yield

The ice maker can produce up to 3-1/2 pounds per day, depending on usage and freezer door openings.

Components

AC Power Cord

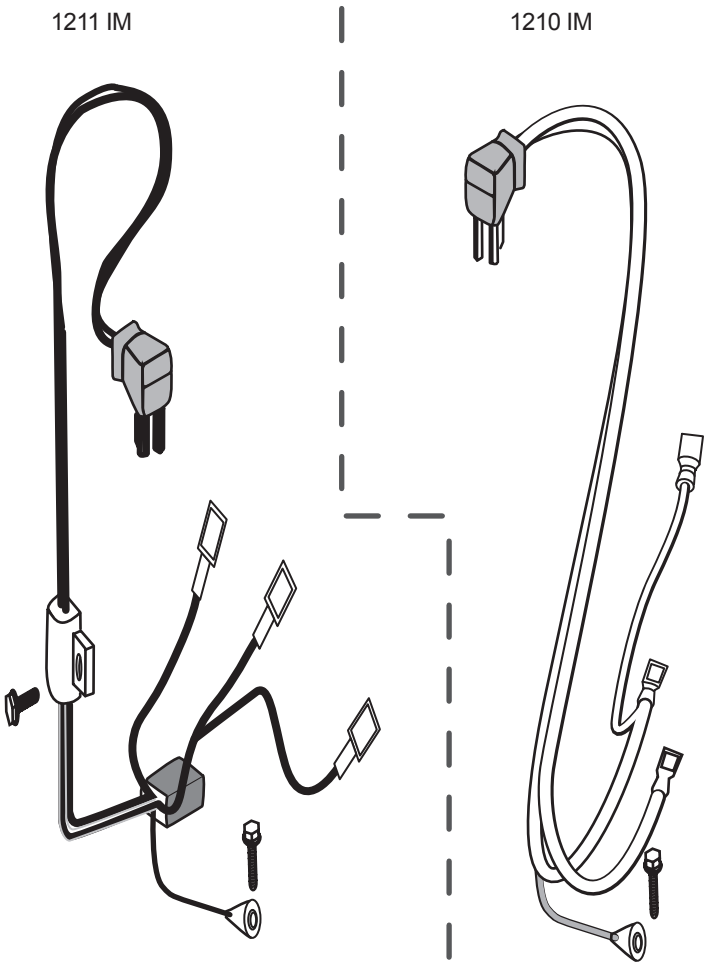

Figure. 10-2. —AC power cords.

Figure 10-2 illustrates the AC power cords installed on 1210 IM and 1211 IM. The cord connect to the ice maker four-wire harness.

AC power to the ice maker is to be supplied through a 2 pole/3 wire/20 amp grounding type receptacle.

Wire Harness

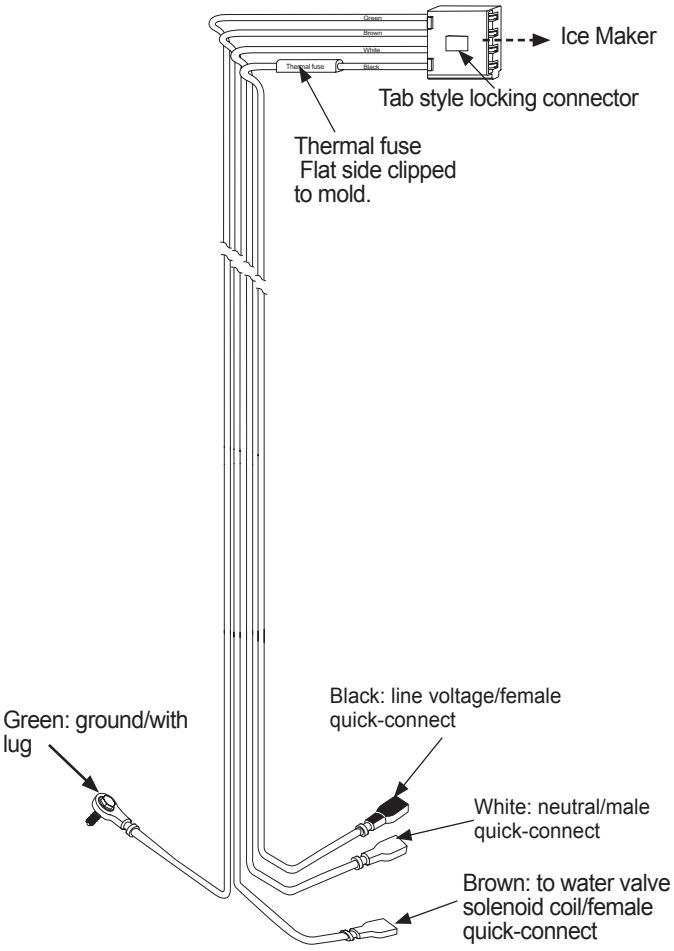

Figure 10-3. —Wire harness.

Figure 10-3 illustrates the wires color coding and application.

◀IMPORTANT▶

A four-wire harness supplies AC power to the ice maker module. The ice maker and its harness are in no way connected to the refrigerator wire harness, to the power board or to the optical control display assembly.

Water Fill Line

Figure 10-4 illustrates the water fill line. The fill line connection at the water valve is a 1/4 inch plastic compression fitting. The connection at the water fill tube is made with a 1/2 inch hose clamp.

The fill line is covered with a foil style 12 volt DC heater. See **"Water Line DC Heater"** in this section.

NOTE

The refrigerator has to be removed from the enclosure to service or replace the water fill line.

Water Fill Tube

The water fill tube illustrated in Figure 10-4, is installed and sealed at the factory. It is not a replaceable component.

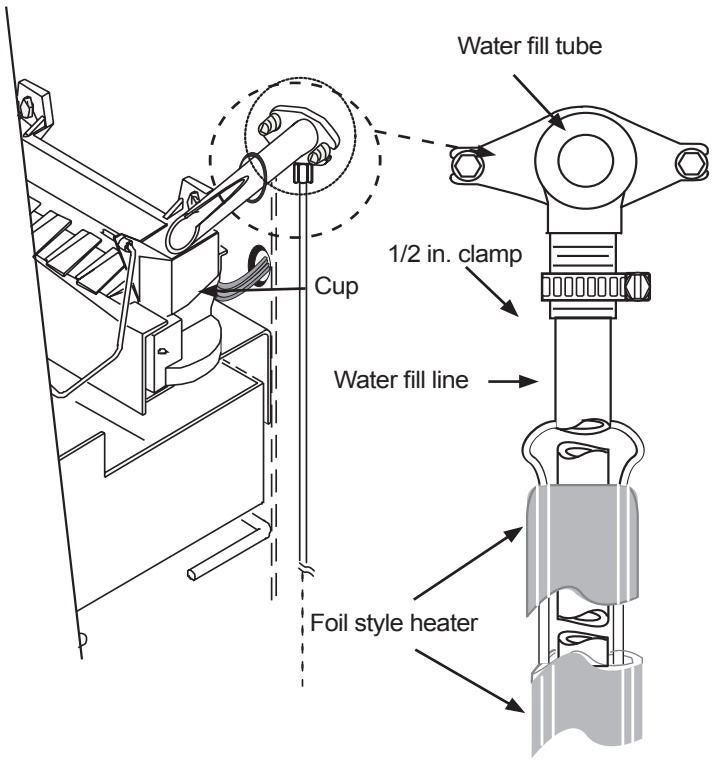

Figure 10-4. —Water fill line and water fill tube connection.

Water Line Heater

In ambient temperatures of 42 to 38 degrees Fahrenheit (5.5 to 3.3 degrees Celsius) and lower, the water line heater keeps the fill line and water valve body from freezing when the refrigerator is on. This heater is controlled by a thermostatic switch, illustrated in Figure 10-5.

WARNING

The water line heater does not protect the ice maker water valve and fill line at ambient temperatures of 0 degrees Fahrenheit (-17 degrees Celsius). At these ambient temperatures the water valve and the water fill line need to winterized.

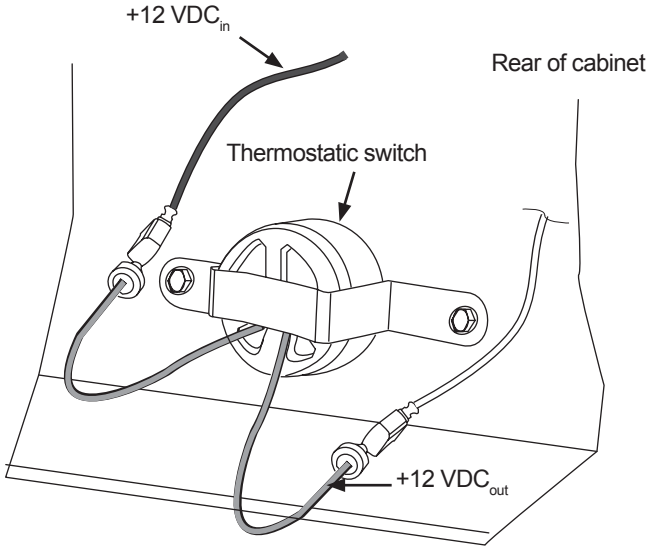

Figure 10-5. —Thermostatic switch and connections.

The thermostat energizes the circuit when ambient temperature is approximately 42 to 38 degrees Fahrenheit (5.5 to 3.3 degrees Celsius) and de-energizes at approximately 48 degrees Fahrenheit (8.8 degrees Celsius).

Water Valve

The water valve, illustrated in Figure 10-6, is not a repairable component.

The solenoid coil is rated for 20 Watts @120 VAC. The ice maker cycle energizes the coil for approximately seven seconds shortly after the ice cubes are ejected. Approximately 4.7 fluid ounces of water refill the mold during the seven second period.

Water Valve Replacement

NOTE

This procedure applies only to water valve part number 618253. The modular ice maker and water dispenser replacement procedure appears in Section 11..

To remove the water valve proceed as follows and refer to Figure 10-6 and Figure 10-7 (page 81).

WARNING

Unplug the refrigerator AC power cord from the RV receptacle when working on the water valve. Failure to unplug the AC power cord may expose the technician and/ or other personnel to an electrical shock hazard.

1. Unplug the ice maker AC power cord from RV receptacle.
2. Shut off the water supply to the water valve
3. Disconnect the BROWN wire and the WHITE wire at the solenoid coil.

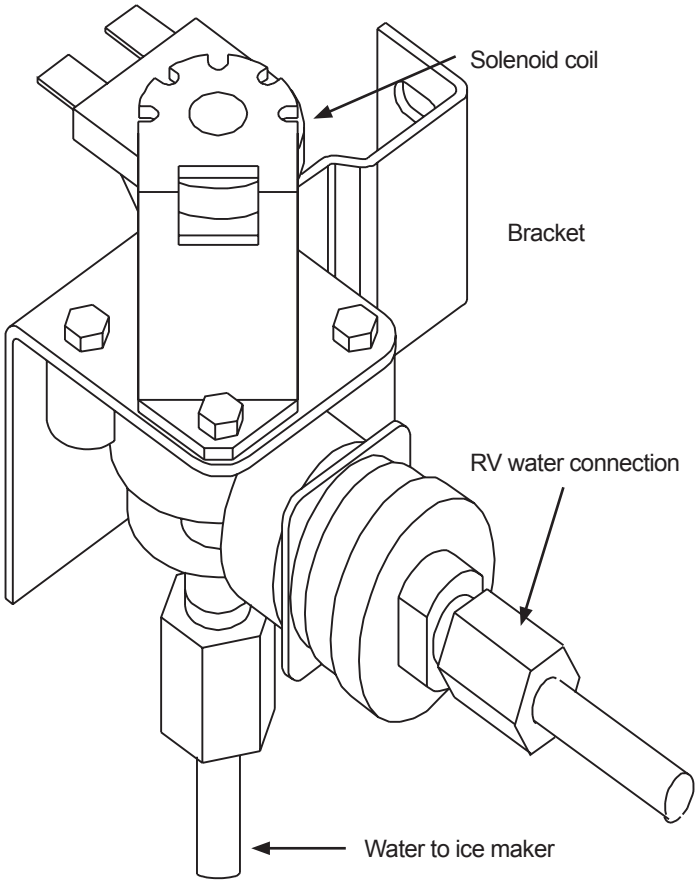

Figure 10-6. —Water valve and water connections.

4. Disconnect thermostatic switch and the water fill line heater:
5. Disconnect the BROWN wire from the heater WHITE wire and unwrap the heater wire from the valve body.
6. Disconnect remaining switch BROWN wire from the +12 volt DC in RED wire.
7. White heater wire from the -12 volt DC in BLACK wire
8. Disconnect the RV water supply line at the water valve.
9. Disconnect the ice maker water fill line at the water valve.
10. Detach the water valve assembly bracket from the back plate by removing the two screws along with their spacers. Retain screws and spacers to install replacement valve.
11. Reverse steps 10 through 1 and see Figure 10-6 and Figure 10-7 (page 81), to install the replacement water valve.

Cycling the Ice Maker Manually

Cycling the ice maker manually verifies the motor works, the mold heater turns on and off, the shut-off arm travels to the OFF position, the water valve opens for seven seconds, and the shut-off arm drops to the ON position.

Figure 10-8 illustrates the jumper wire needed for jumpering test points L and H.

Before starting, shut off the water supply to the water valve and make sure the AC power cord is plugged into an energized receptacle.

To manually cycle the ice maker:

1. Remove the ice bin and freezer shelf.
2. Detach the ice maker from the evaporator plate. ***Do not to pull on the wire harness.***
3. Rotate the ice maker so the module cover faces toward the freezer door, then remove the cover.

⚠ WARNING

Pull the jumper wire out when a "click" sound is heard or no later than 15 seconds after jumpering terminals T and H. Failure to remove jumper wire may damage the ice maker.

4. Jump test points T and H. See Figure 10-9, page 82

NOTE

Figure 10-10, page 82 illustrates the cycle events after jumpering test points T and H. Jumpering the points bypasses the thermostat, which causes the motor and the mold heater to come on.

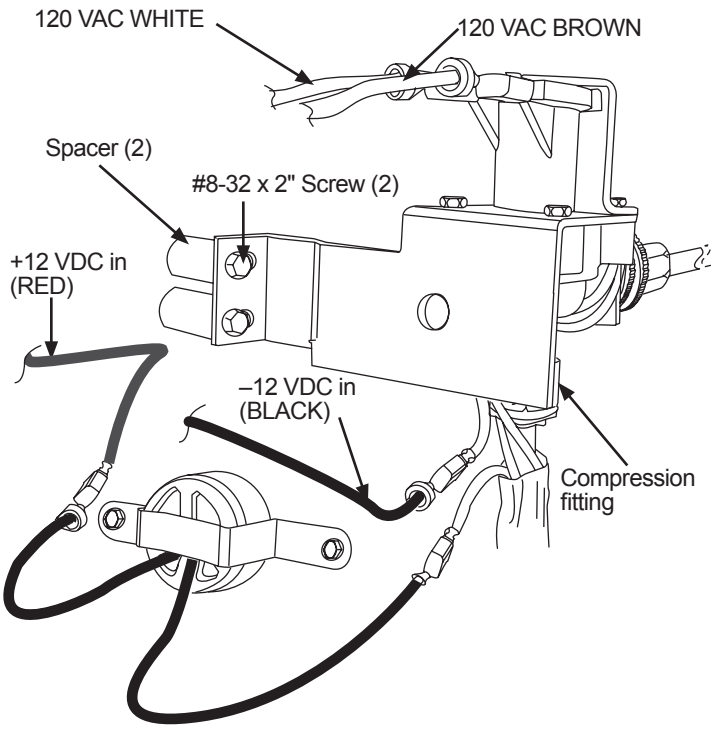

Figure 10-7. —Water valve bracket and electrical connections.

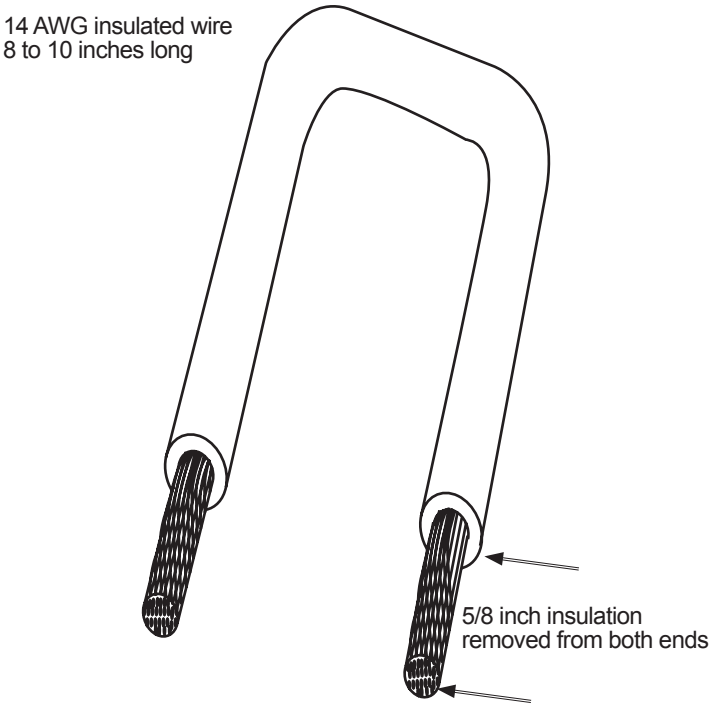

Figure 10-8. —14 AWG jumper wire.

6. Pull out the jumper wire when a “click” sound is heard or no later than 15 seconds after jumpering test points T and H.

a. The motor turns the ejector in a clockwise direction and the mold heater energizes.

b. The heater de-energizes as the ejector fingers pass through the 6 o’clock position.

c. The shut off arm begins to move up to the OFF position as the ejector fingers pass through the 9 o’clock position.

d. The opening of the water valve takes place as the ejector fingers pass through the 12 o’clock position. The valve closes approximately seven seconds later.

e. The shut-off arm drops to the ON position after the water valves is de-energized.

f. The ejector parks at the 2 o’clock position.

g. The cycle continues when the thermostat senses 17 to 14 degrees Fahrenheit (-8.3 to -10 degrees Celsius).

The motor should run smoothly throughout the cycle until the ejector is parked.

If the motor does not run, stops or makes grinding noises, replace ice maker. See section “Replacing Ice Maker,” page 87.

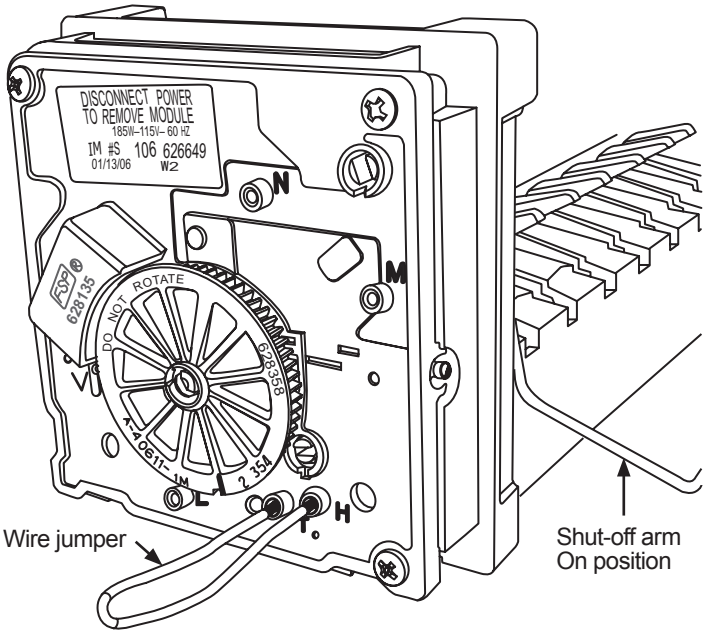

Figure 10-9. —Cycling the ice maker manually.

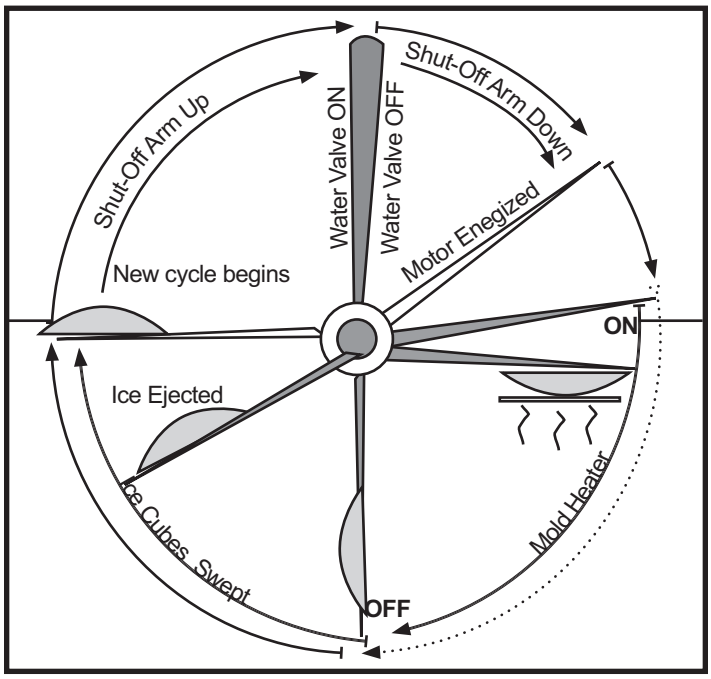

Figure 10-10. —Ice maker 7-minute cycle events.

Testing Water Valve Operation

Water valve operation can be tested by jumpering points V and L.

Before this test is performed, make sure AC power is available, shut off the water supply to the water valve, and make an insulated wire jumper like the one illustrated in Figure 10-8, page 81.

To test water valve operation:

1. Remove the ice bin and freezer shelf.
2. Detach the ice maker from the evaporator plate. ***Do not to pull on the wire harness.***
3. Rotate the ice maker so the module cover faces toward the freezer door, then remove the cover.
4. Insert one end of the jumper in test point V and the other in test point L. See Figure 10-11, page 83.

When jumpered, the solenoid coil should make a click sound followed by a continous buzzing sound as long as the jumper remains in test points V and L.

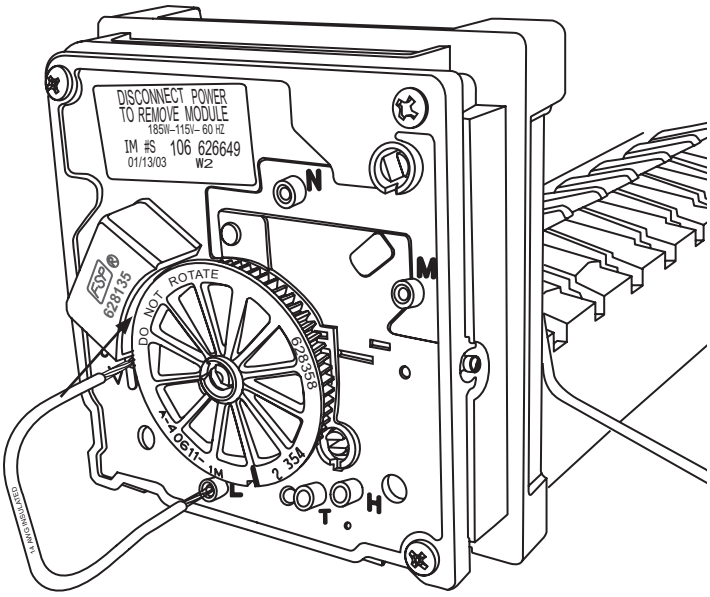

Figure 10-11. —Jumpering test points V and L.

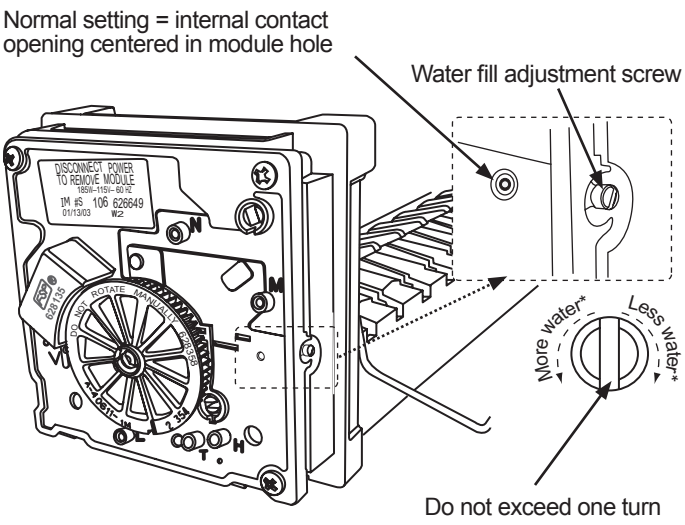

Figure 10-12.. —Water adjustment screw and contact alignment location.

Water Fill Adjustment

The water fill adjustment is set at the factory. The production of thin ice cubes indicate not enough water in the mold. The ejector rocking back and forth may indicate fused ice cubes due to too much water in the mold. Both of these conditions may require adjusting the water fill to increase or decrease the time the water valve remains open. To adjust the water fill capacity screw:

1. Remove the ice bin and freezer shelf.
2. Detach the ice maker from the evaporator plate. ***Do not to pull on the wire harness.***
3. Rotate the ice maker so the module cover faces toward the freezer door, then remove the cover.
4. Rotate the ice maker so the shut-off arm is facing towards the freezer door.
5. Locate the contact opening shown in Figure 10-12.

NOTE

Do not turn the water fill adjustment screw if the contact opening is centered in the module hole. See Figure 10-12.

WARNING

Do not turn the water fill adjustment screw more than one turn. Turning the screw more than one turn may damage the contacts.

6. Turn the adjustment screw clockwise or counterclockwise to align the center of the contact with the hole in the module. See Figure 10-12.

Checking Water Valve Solenoid Coil Resistance

The solenoid coil resistance should measure between 295 and 360 ohms. It can be checked at the water valve solenoid coil as illustrated in Figure 10-13 or through the ice maker module test points V and N as illustrated in Figure 10-14.

To check resistance through points V and N:

1. Remove the ice bin and freezer shelf.
2. Detach the ice maker from the evaporator plate. ***Do not to pull on the wire harness.***
3. Rotate the ice maker so the module cover faces toward the freezer door, then remove the cover.
4. Roll the ice maker so the shut-off arm side is down with the module facing away from the freezer.

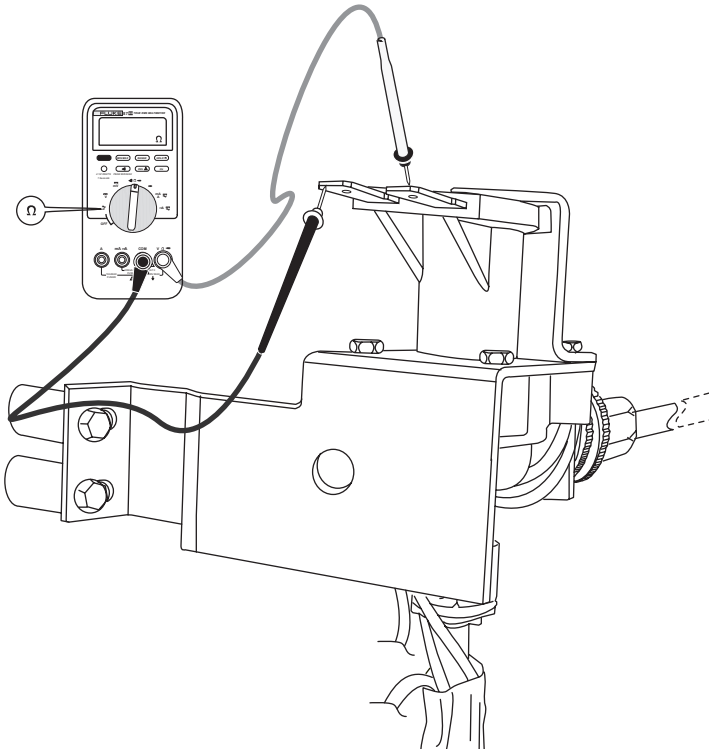

Figure 10-13. —Measuring solenoid coil resistance.

NOTE

The multimeter test probe tips must be at least 1/2 inch long to contact the test points.

5. Set the multimeter to ohmmeter function, then insert one probe into point V and the other into point N.

Checking Mold Heater Resistance

The mold heater resistance should measure between 71 to 79 ohms. To check the mold heater resistance through test points L and H:

1. Remove the ice bin and freezer shelf.
2. Detach the ice maker from the evaporator plate. ***Do not to pull on the wire harness.***
3. Rotate the ice maker so the module cover faces toward the freezer door, then remove the cover.
4. Lower the shut-off arm to the ON position.

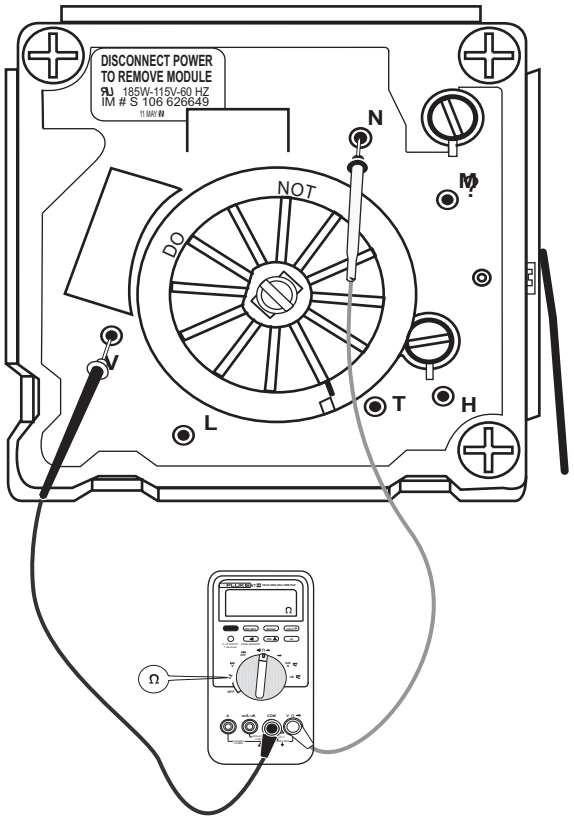

Figure 10-14. —Measuring solenoid coil resistance through wire harness

NOTE

The multimeter test probe tips must be at least 1/2 inch long to contact the test points.

5. Set the multimeter to ohmmeter function, then insert one probe into point L and the other into point H as Figure 10-14 illustrates.

Checking Voltage to the Stepper Motor Connection

AC voltage at the stepper motor connection can be checked through test points N and M

1. Remove the ice bin and freezer shelf.
2. Detach the ice maker from the evaporator plate. ***Do not to pull on the wire harness.***
3. Rotate the ice maker so the module cover faces toward the freezer door, then remove the cover.
4. Lower the shut-off arm to the ON position
5. Make sure AC power is available to the ice maker.

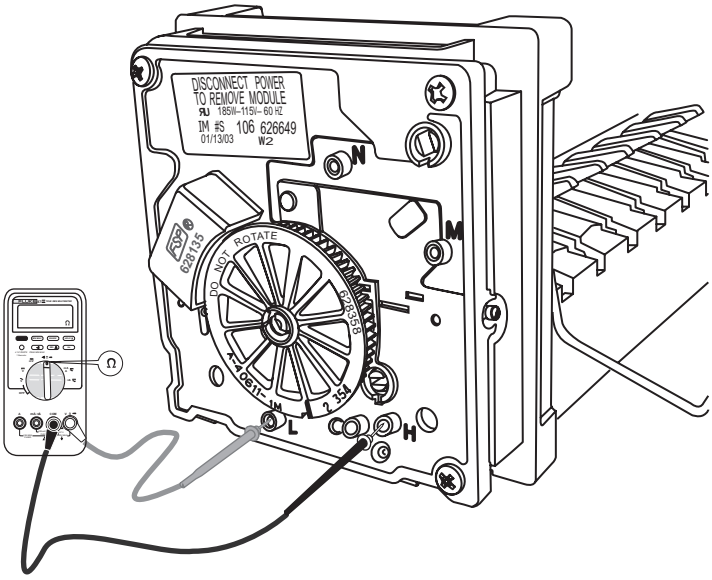

Figure 10-15. —Measuring mold heater resistance.

NOTE

The multimeter test probe tips must be at least 1/2 inch long to contact the test points.

6. Set the multimeter to AC voltage function, then insert one probe into point N and the other into point M as Figure 10-15 illustrates.

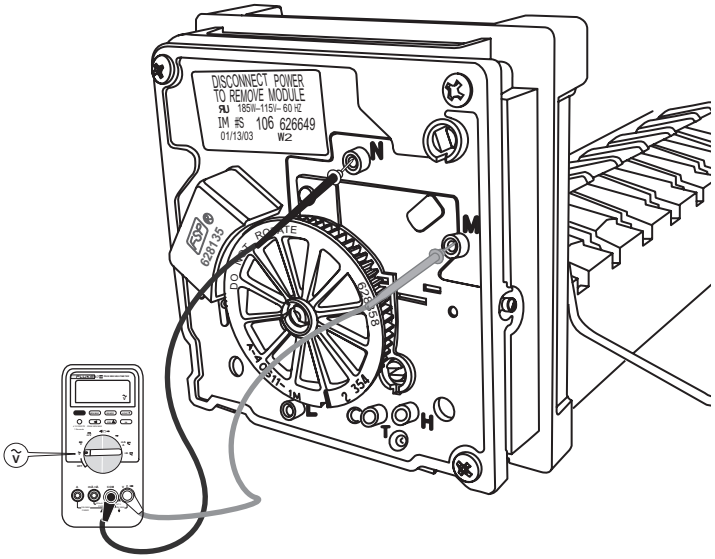

Figure 10-16. —Measuring voltage at stepper motor.

- 108 to 132 VAC: normal voltage to motor.
- 0 voltage: check voltage at AC outlet and continuity of ice maker power cord.
- 108 to 132 volts AC through AC power cord: Check ice maker wire harness BLACK wire and WHITE wire for continuity.

Ice Maker Troubleshooting Chart

Symptom	Probable Cause	Solution
Not cycling and no ice in mold.	1. No AC power available. 2. No water available. 3. Water valve strained clogged. 4. Water valve failed to open.	1. Restore AC power. 2. Restore water pressure. 3. Clean water valve strainer. 4. Check solenoid coil connections and resistance.
Not cycling / ice in mold.	1. Shut-off arm in OFF position. 2. No AC power available. 3. Leaky water valve. 4. Jammed ice cubes. 5. Mold heater open -no resistance. 6. Module thermostat faulty. 7. Excessive mineral deposits buildup in mold	1. Lower to ON position. 2. Restore AC power. 3. Replace water valve 4. Check for bent shut-off arm 5. Replace ice maker. 6. Replace ice maker. 7. Clean mineral deposits buildup in mold.
Excessive frost on and around ice maker.	1. Air entering freezer compartment. 2. Open container(s) in freezer.	1. Check freezer door gasket /wire harness Permagum seal. 2. Containers that contain liquids have to be sealed prior to placing in freezer.
Not cycling / AC power available	1. Mold heater failed open 2. Stepper motor failure 3. Mold thermostat faulty. 4. Thermal fuse open.	1. Replace ice maker. 2. Replace ice maker. 3. Replace ice maker. 4. Replace wire harness.
Water spilling over ice maker mold.	1. Ice jam with cycle in fill position. 2. Leaky water valve. 3. Mold thermostat failure. 4. Stepper motor failure.	1. Clear jammed ice cubes.. 2. Replace water valve 3. Replace ice maker. 4. Replace ice maker.
Ice maker trips GFI	1. Excessive frost buildup behind ice maker. 2. Connection at water valve wrong. 3. Harness contacts wet and corroded. 4. Mold heater shorted to ground.	1. Defrost freezer/remove and dry ice maker connection and module. 2. Correct connection at water valve solenoid coil. 3. Remove ice maker to clean and dry contacts . 4. Check mold heater for short..

Ice Maker Replacement Procedure

Tools

#2 Phillips screwdriver

5/16” nut driver

#2 Flat blade screwdriver

To remove the ice maker:

1. Turn off the refrigerator.
2. Unplug the ice maker AC power cord at the RV outlet.

Steps 3 to 6, see Figure 10-17

3. Remove the ice bin, and the freezer shelf.
4. Remove two retaining screws ① holding the ice maker to the mounting plate.
5. Remove two freezer evaporator plate screws ② along with the washers, then remove the mounting plate.
6. Remove two ③ upper bracket screws.

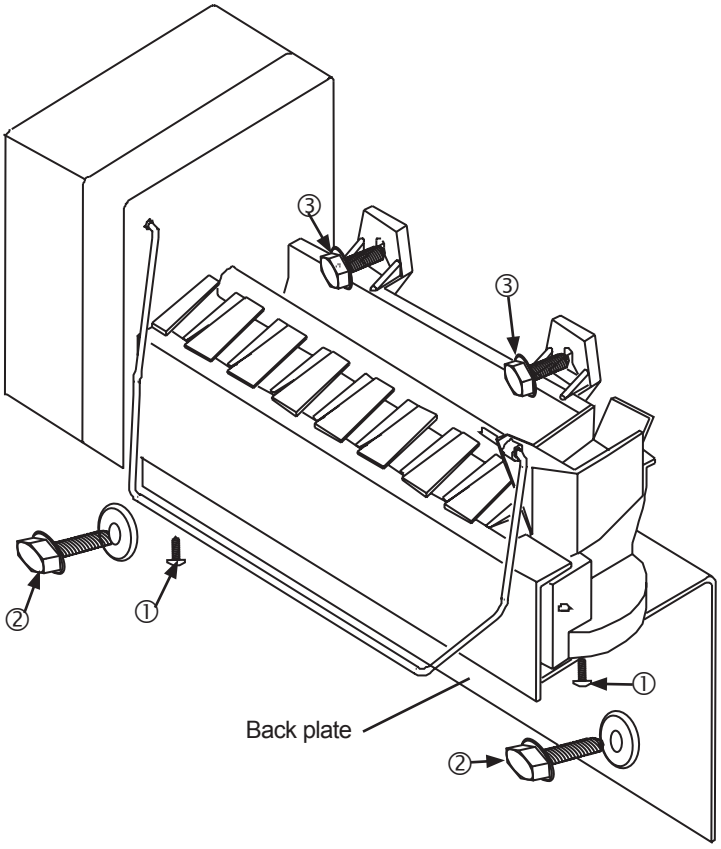

Figure 10-17. —Ice maker fasteners and back plate.

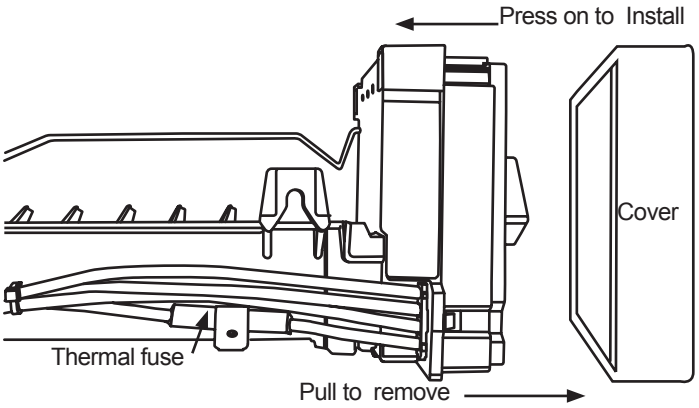

Figure 10-18. —Module cover.

7. Rotate the ice maker so the front cover faces the freezer door and its front side facing down.

Steps 8 to 10, see Figure 10-18 and Figure 10-19

8. Remove module cover.
9. Detach thermal fuse ❶ and ❷.
10. Unplug harness plug from module ❸ and ❹.
11. Remove the shut-off arm. See Figure 10-20,
12. Reverse procedure to install ice maker.

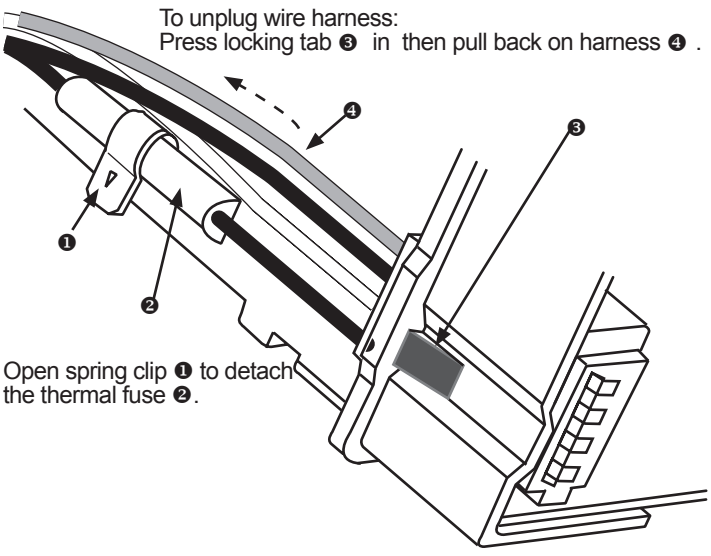

Figure 10-19. —Harness plug and thermal fuse

Figure 10-21 illustrates the back view of modular water valve assembly found in 121X IMWD and 1211 IMWD models with ice maker and water dispenser system.

The label on the side of the assembly lists the assembly part number, specifications, and identifies the water dispenser solenoid coil (colored Blue, 12 VDC) and the ice maker solenoid coil (colored Red, 120 VAC).

Two 8-32 x 1" hex head screws hold the extension bracket to the back panel. The assembly is held on the extension bracket with two 8-32 x 1" hex head screws.

The valve assembly is supplied water through a 1/4" compression style fitting, which feeds both, the water dispenser valve and the ice maker water valve.

Ice Maker Water Valve

Figure 10-21 and Figure 10-22 illustrate and provide information on the ice maker water valve.

Water Dispenser Valve

For information on the water dispenser water valve refer to Section 11.

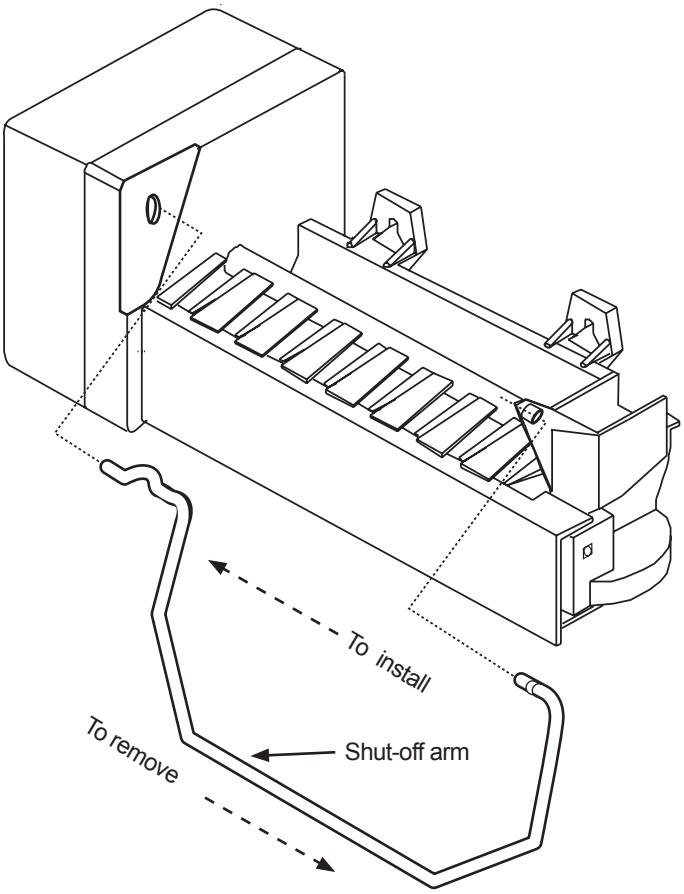

Figure 10-20. —Shut-off arm removal and installation.

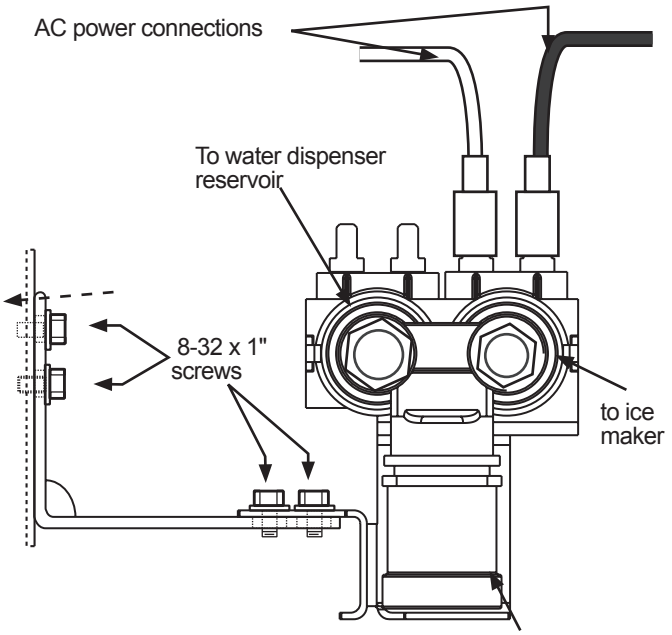

Figure 10-21. — Ice maker and water dispenser modular valve -Back View.

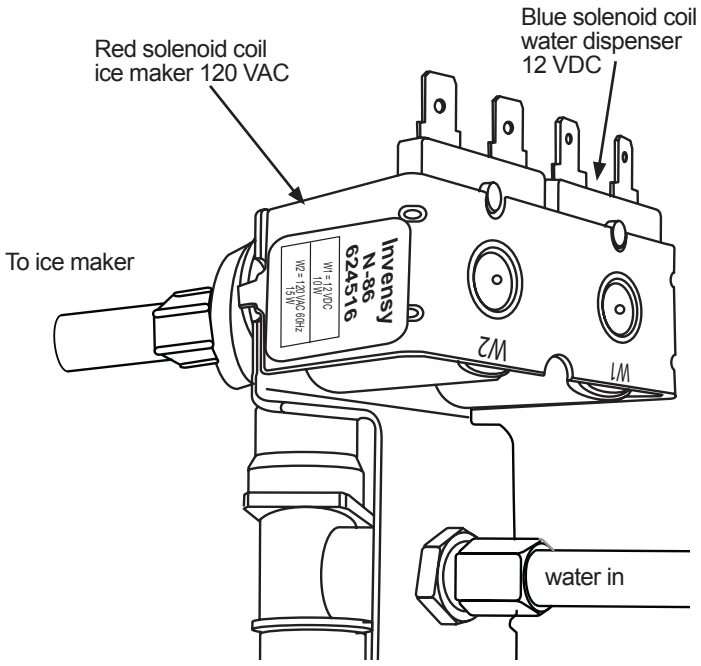

Figure 10-22. — Ice maker and water dispenser modular valve -Skewed side view.

SECTION 11 —WATER DISPENSER

The water dispenser is an optional system installed at the factory. The main components are the divider mounted water dispenser (Figure 11-1), the reservoir (Figure 11-2), and the water valve (Figure 11-3).

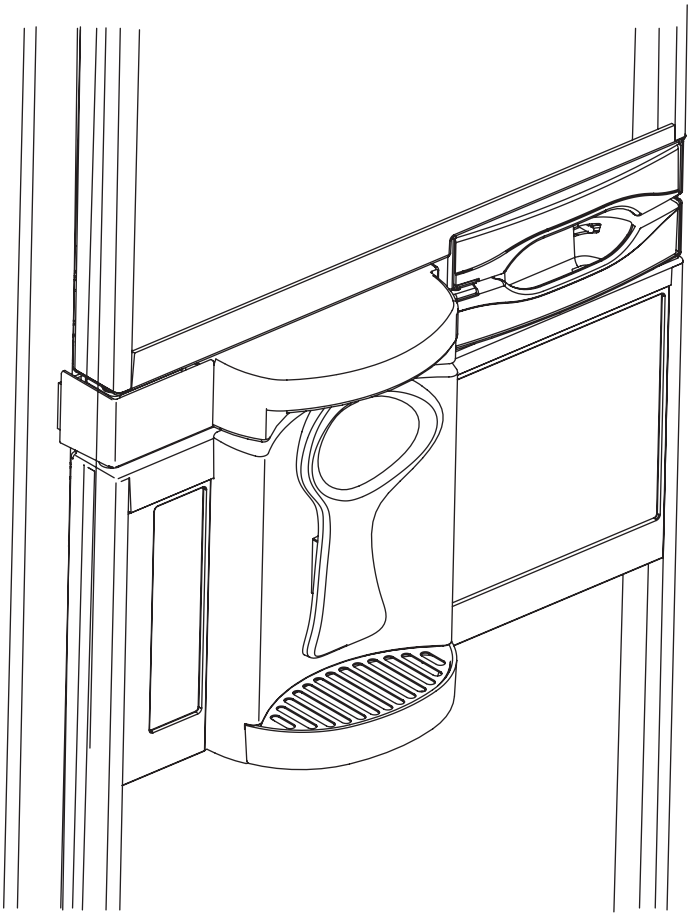

Figure. 11-1. —Water dispenser-external view.

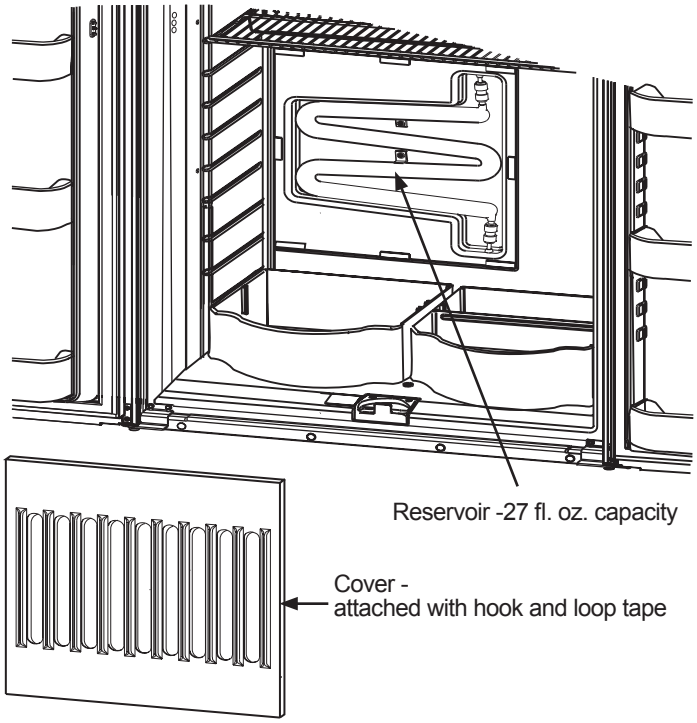

Figure. 11-2. —Reservoir in cabinet recess and cover.

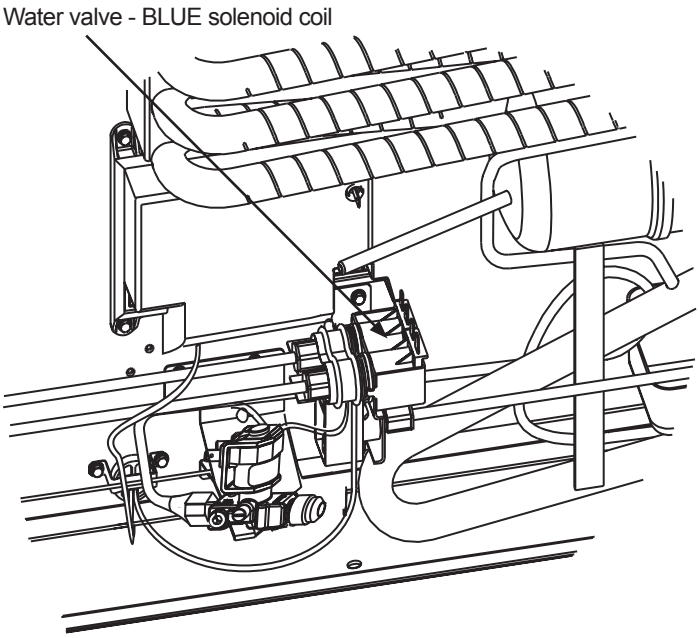

Figure. 11-3. —12 volt DC solenoid operated water valve.

Water Dispenser —Operation

The water dispenser works as follows. Pressing a small container against the spring loaded paddle drives in the plunger, which closes the switch.

The switch sends power to the water valve solenoid coil. The electromagnetic force created by the coil opens the water valve, allowing water flow into the reservoir.

Water flows from top of the reservoir to the spigot. The water flowing out of the spigot is replaced by water flowing into the reservoir as illustrated in Figure 11-4

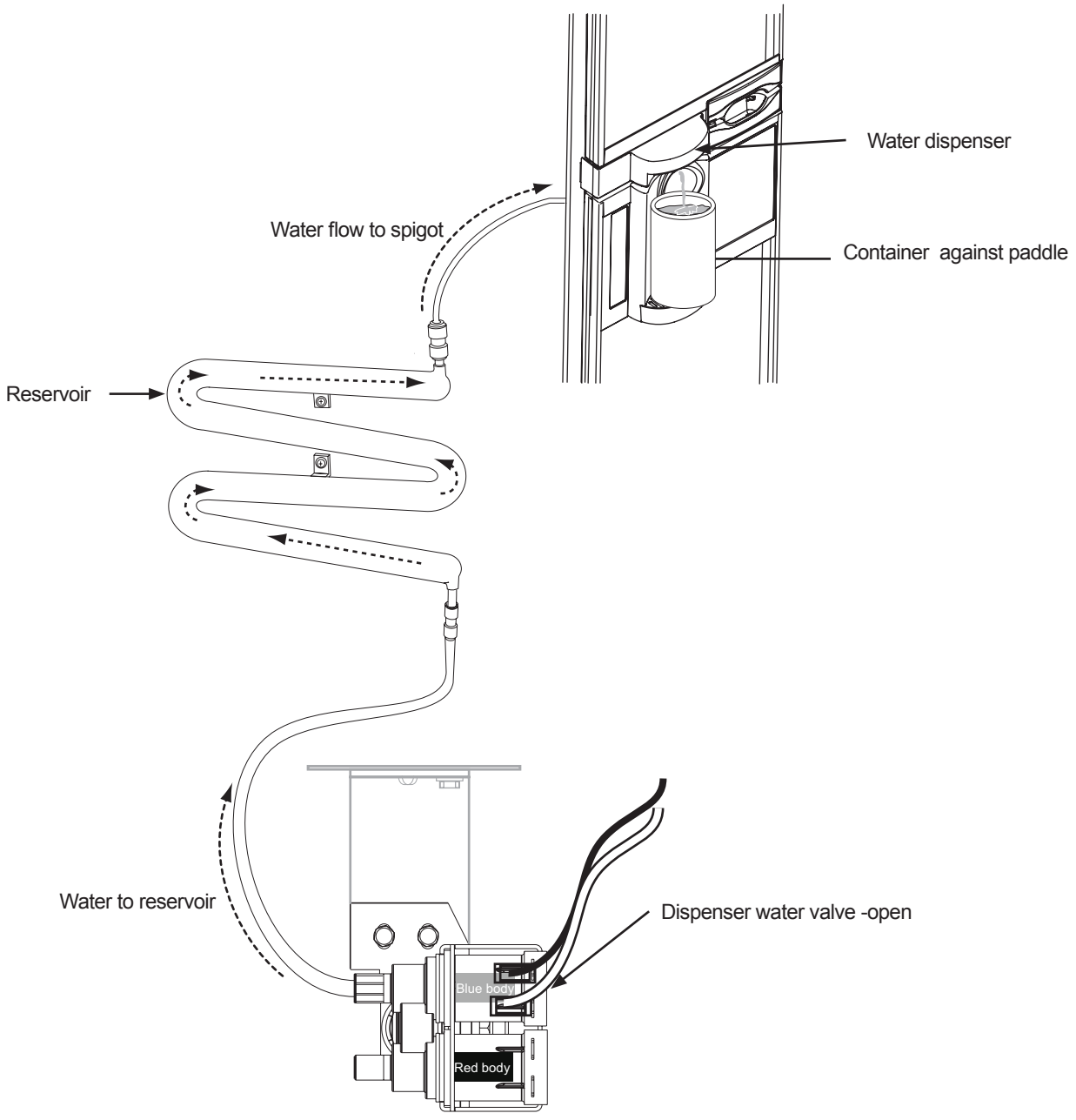

Figure. 11-4. — Water flow through dispenser system.

Water Valve Replacement

NOTE

This procedure applies only to the modular ice maker and water dispenser valve assembly, part number 624516.

To remove the water valve assembly proceed as follows and refer to Figure 11-5 and Figure 11-6.

WARNING

Unplug the refrigerator AC power cord from the RV receptacle when working on the water valve. Failure to unplug the AC power cord may expose the technician and/ or other personnel to an electrical shock hazard.

1. Unplug the ice maker AC power cord from RV receptacle.
2. Shut off the water supply to the valve
3. Disconnect the BROWN ○ wire and the WHITE ☽ wire at the ice maker solenoid coil.
4. Disconnect the +12 volt DC BLACK ☾ wire and the -12 volt DC WHITE ☿ wire from the water valve solenoid coil.
5. Disconnect thermostatic switch and the water fill line heater as follows:

a. The switch BROWN wire from the heater WHITE wire.

b. The remaining thermostatic switch BROWN wire from the +12 volt DC RED wire.

c. White heater wire from the -12 volt DC BLACK wire

6. Disconnect the ice maker water fill line † at the ice maker water valve.
7. Disconnect the water dispenser fill line ✝ at the water dispenser valve.
8. Disconnect the RV water supply line ⏀ at the water valve.
9. Detach the water valve assembly bracket from the back plate. Retain screws to install replacement valve.
10. Reverse steps 9 through 1 and see Figure 11-5 and Figure 11-6 to install the replacement water valve.

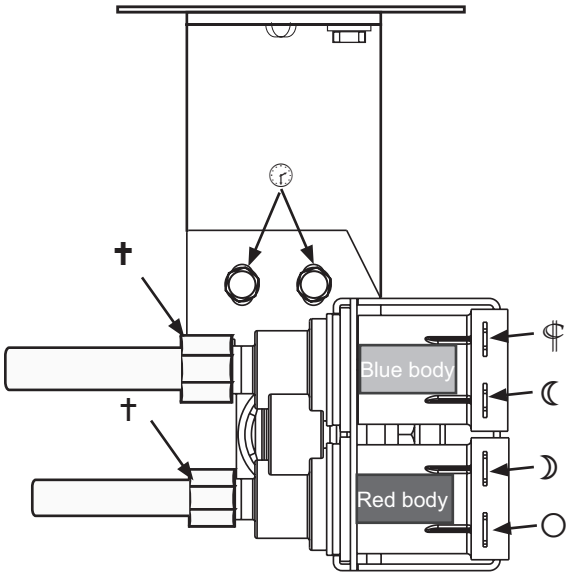

Figure. 11-5.— Water valve connections -Top View.

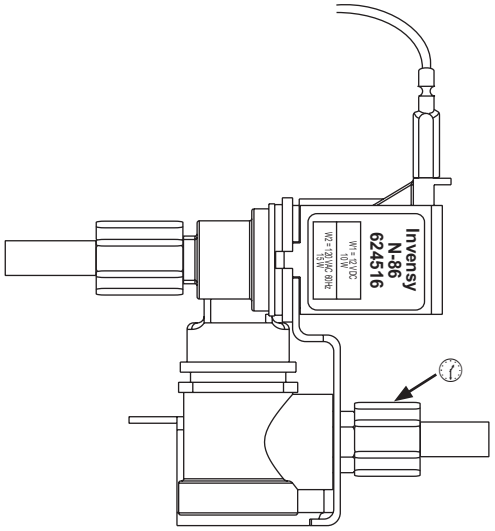

Figure. 11-6. —Water valve inlet connection -Side View.

Reservoir Replacement

Tools

2 Phillips Screwdriver

1. Shut off the water supply to the valve.
2. Place a suitable container under the spigot then operate dispenser to relieve water pressure.
3. Power off the refrigerator.
4. Disconnect the water line at the valve and place the end in suitable container to catch the draining water. See Figure 11-7, ① and ④.
5. Remove the reservoir compartment cover. See Figure 11-8, ①.
6. Disconnect the dispenser water line at the reservoir. See Figure 11-9 ①. Allow water to drain into the container (placed in step 4).
7. Disconnect the water fill line from the reservoir. See Figure 11-9 ③.
8. Remove the retaining screws, then pull the reservoir out of the cabinet recess. See Figure 11-9, ② and ②
9. Reverse steps 8 through 1 to install replacement reservoir.

Dispenser Switch Replacement

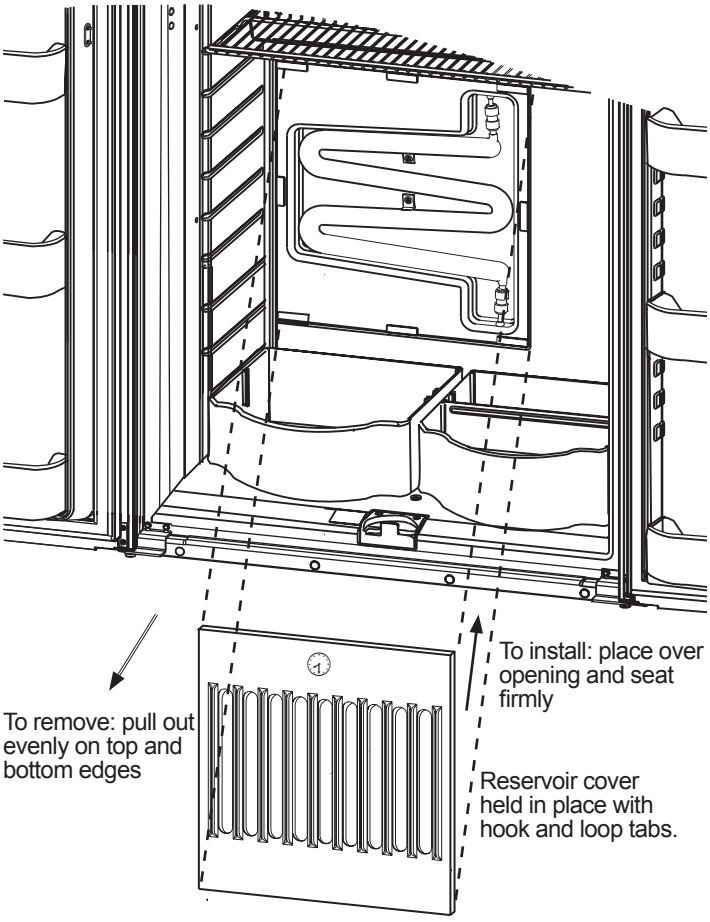

Figure. 11-8. —Cover, reservoir compartment.

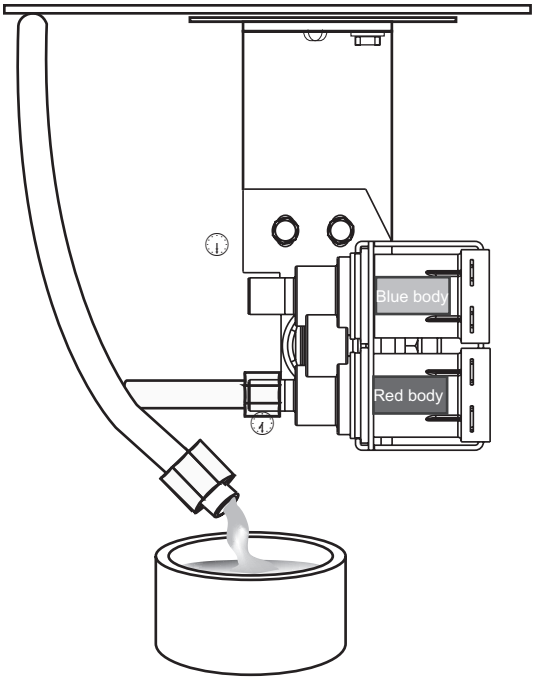

Figure. 11-7. —Draining reservoir before removal.

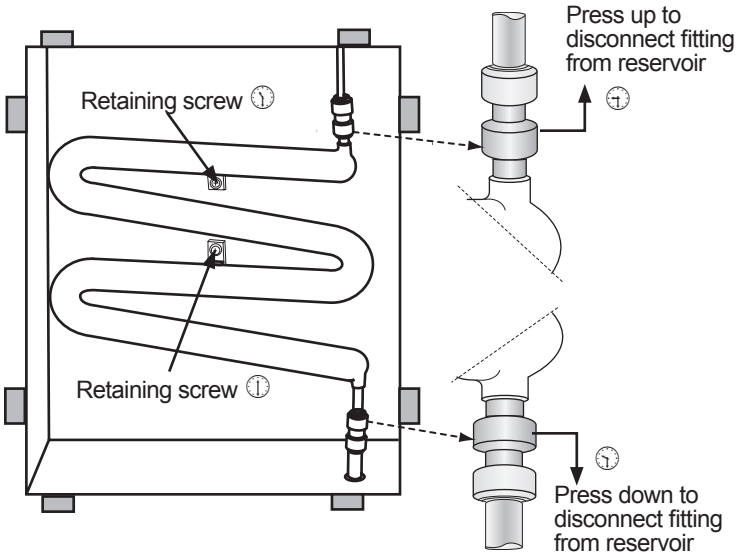

Figure. 11-9. —Reservoir fittings and retaining screws.

LED Circuit Board Replacement

Tools

2 Phillips Screwdriver

1. Power off the refrigerator.
2. Remove the left hinge cover.
3. Remove the striker plate.
4. Remove water dispenser cover. See Figure 11-10.
5. Disconnect circuit board from circuit. See Figure 11-11, A
6. Remove circuit board from bracket. See Figure 11-11, B, C and D.
7. Reverse steps 6 through 1 to install replacement LED circuit board.

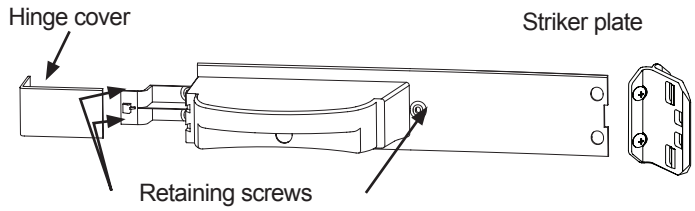

Figure. 11-10. —Cover, water dispenser.

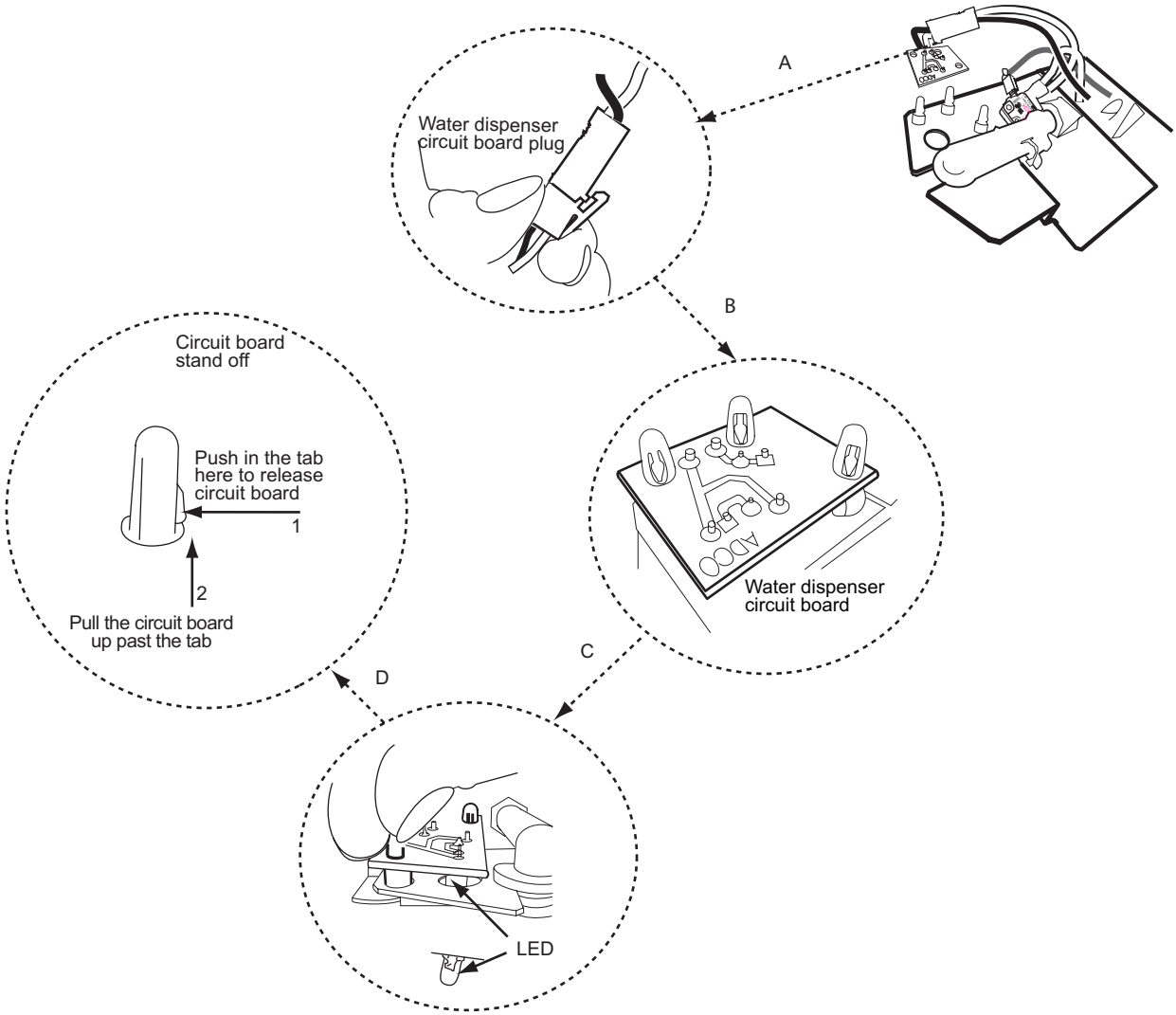

Figure. 11-11. —LED circuit board replacement

SECTION 12 —WIRING DIAGRAMS AND PICTORIALS

A ..... Temperature switch
B ..... AC heaters
C ..... Thermister
D ..... Interior light
E ..... Divider heater
F ..... Door contacts
G ..... Door switches
H ..... Gas valve (optional)
I ..... Fans
J ..... Ice maker water line heater (optional)
K ..... Water valve heater (optional)
L ..... Dispenser water line heater (optional)
M ..... Dispenser water valve heater (optional)
N ..... Dispenser valve (optional)
O ..... Fan temperature switch
P ..... Temperature switch (optional)
Q ..... Dispenser switch (optional)
R ..... Dispenser light (optional)
S ..... Igniter (optional)
T ..... Chassis ground
U ..... Flapper heater heater
V ..... Flapper heater housing ground
1 ..... Switched 12 VDC
2 ..... Fused continuous 12 VDC
3 ..... Communications
4 ..... Display ground
5 ..... Auxilliary ground
6 ..... Auxilliary +12 VDC
7 ..... Divider + 12 VDC
8 ..... Gas valve + 12 VDC
F1 ..... 5 Amp DC fuse
F2 ..... 8 Amp AC fuse

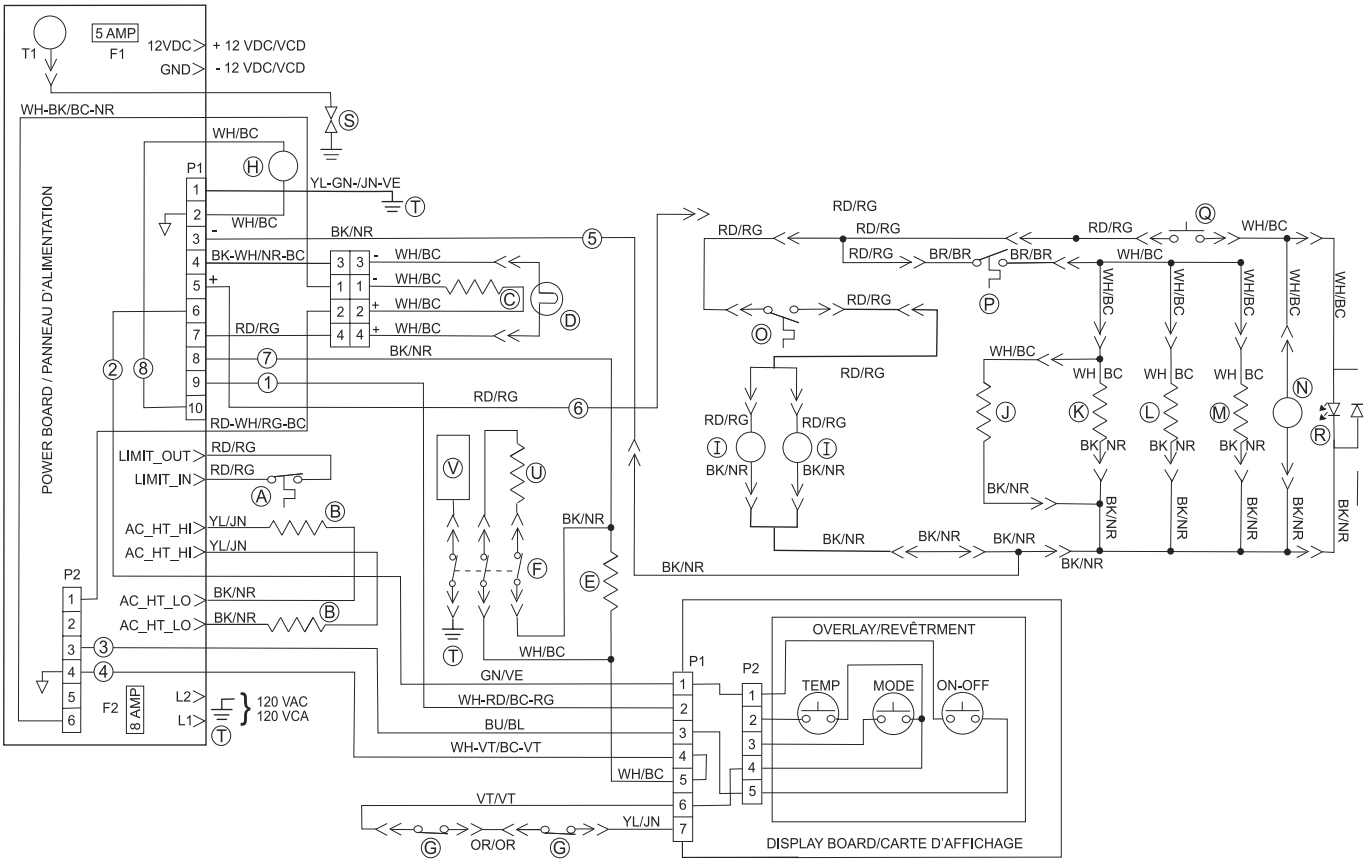

Figure. 12-1. —Wiring diagram.

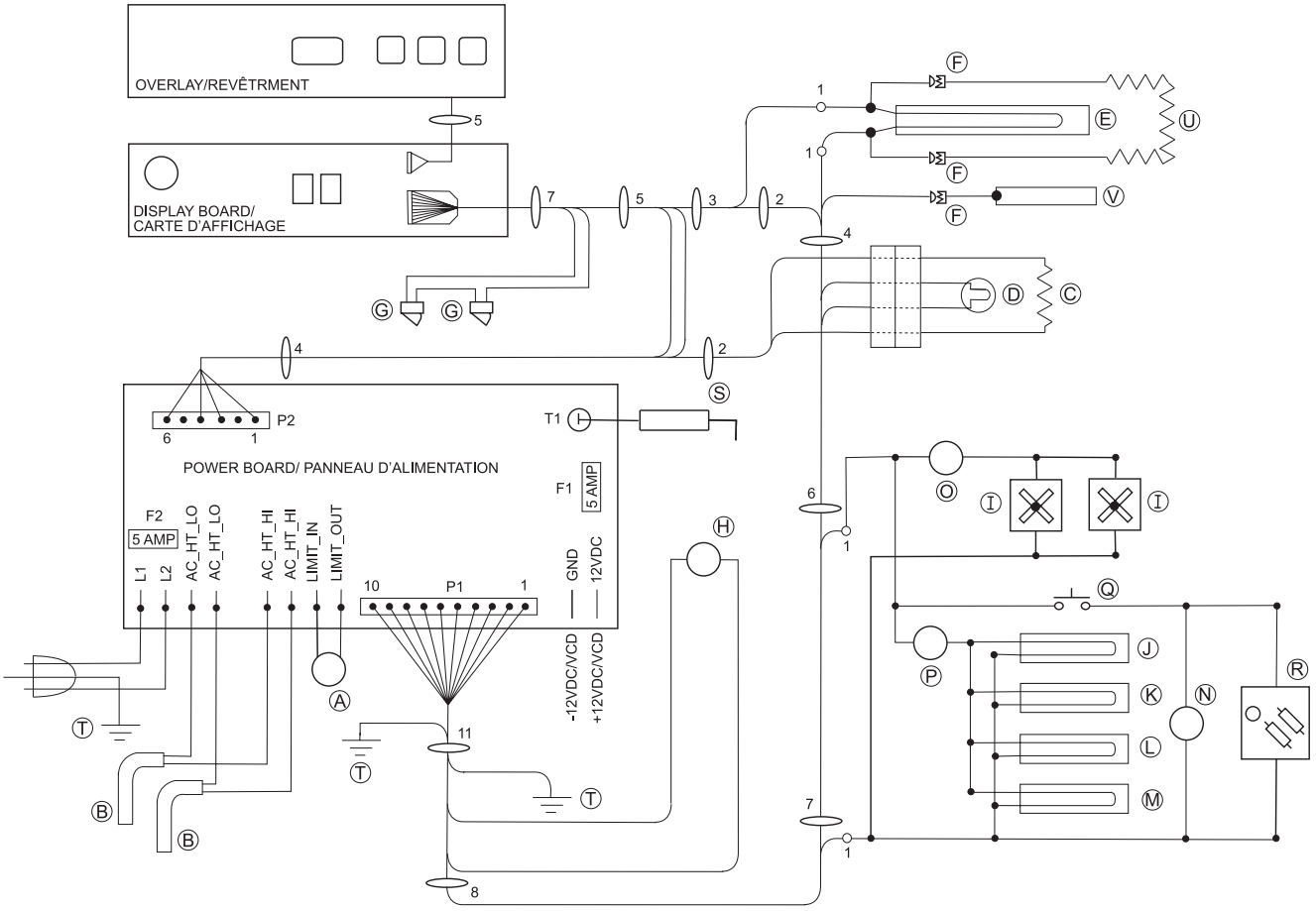

Figure. 12-2. —Wiring pictorial.

1 ..... 120 VAC Hot/Smooth
2 ..... 120 VAC Neutral/Smooth
3 ..... Ground connection
4 ..... Thermal Fuse
5 ..... Solenoid Coil/Water valve
6 ..... Ice Maker
7 .....Mold Heater
8 .....Mold Thermostat
9 ..... ON/OFF Switch
10 ..... Fill Switch
11 .....Hold Switch
12 .....Stepper Motor

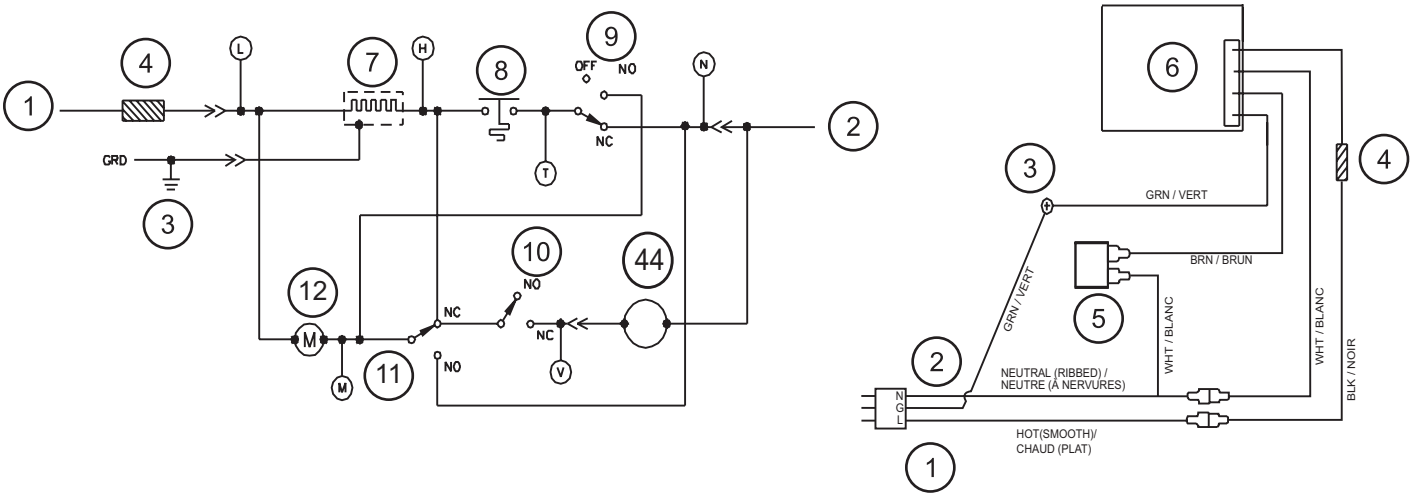

Figure. 12-3. —Ice maker wiring diagram and pictorial

This page intentionally left blank

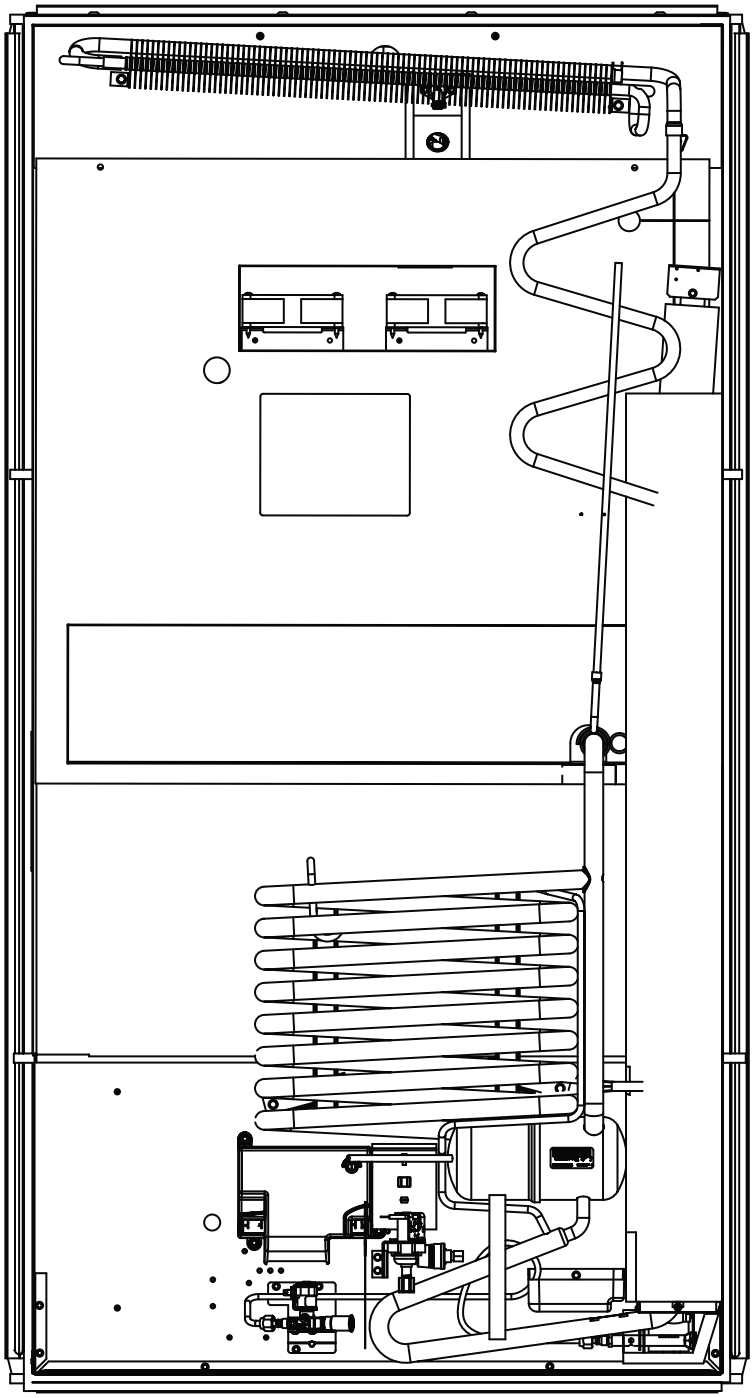

NORCOLD, Inc.
P. O. Box 4248
Sidney, OH 45365

NORCOLD, Inc.
Customer Support Dept.
Telephone: 800-543-1219
Fax: 937-497-3183
www.norcold.com