Hotpoint

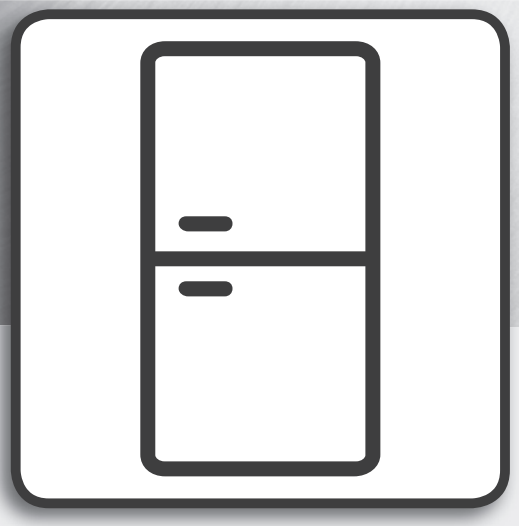

User Manual

www.hotpoint.eu/register

USER MANUAL

THANK YOU FOR BUYING A HOTPOINT PRODUCT.
In order to receive a more complete assistance, please register your appliance on
www.hotpoint.eu/register

INDEX

Use & Care guide 2
Product description 2
Accessories * 2
Control panel 3
Shelves 4
Door 4
No-frost refrigerator compartment 4
Defrosting the freezer compartment 4
Stop frost accessory* 4
Procedure to clean the stop frost accessory * 5
How to use the appliance 6
First time use 6
Refrigerator compartment and food storage 6
How to store fresh food and beverages 6
Freezer compartment food storage 7
Removing the freezer drawer container 7
Tips for freezing and storing fresh food 7
Frozen food: shopping tips 7
Storage times for home frozen foods 8
Functional sounds 8
Alarm table 9
Recommendation in case of no use of the appliance 9
Cleaning and maintenance 10
Troubleshooting 11
After-sales service 12

Installation guide 13

Product description

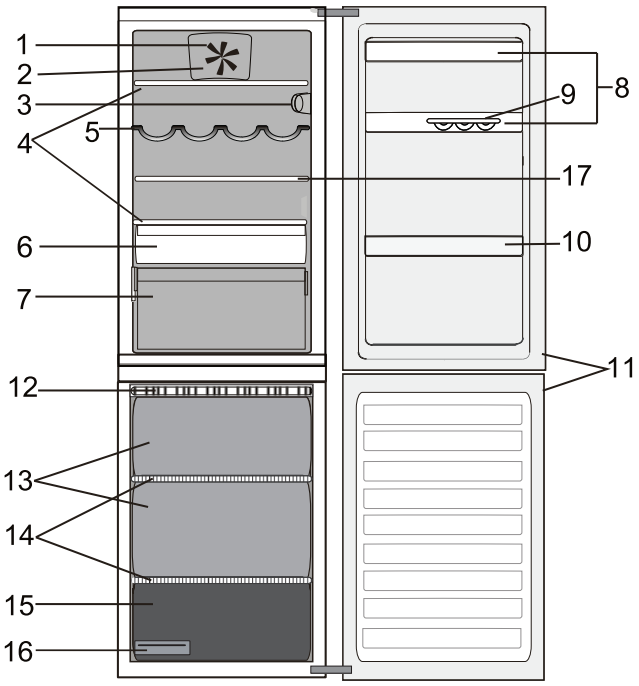

1. Fan*
2. Fan cover *
3. Electronic control panel/light unit
4. Shelves
5. Bottle rack *
6. Cooler compartment * (best for meat and fish)
7. Fruit and vegetable crisper
8. Door balconies
9. Egg tray
10. Bottle balcony
11. Door seal
12. Stop frost accessory*
13. Storage compartments
14. Shelves
15. Freezer and storage compartment
16. Ice tray
17. Tuck shelf *

Accessories *

EGG TRAY



HUMIDITY CONTROL

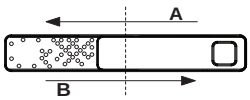

BOTTLE RACK

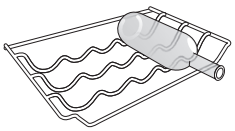

ICE TRAY

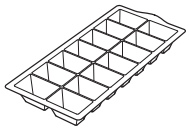

STOP FROST ACCESSORY

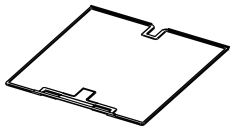

TUCK SHELF

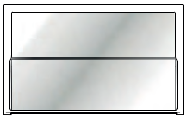

* Available only on certain models

Control panel

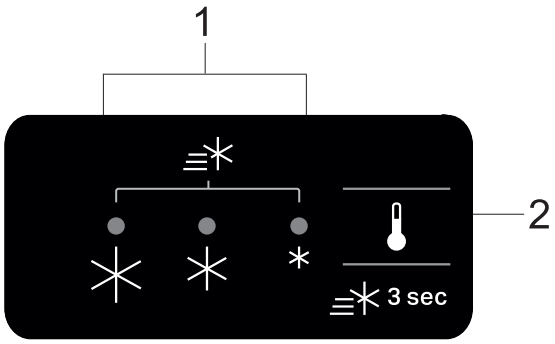

1. Indicator Leds (to display the current temperature setpoint or the Super Cooling function)
2. Super Cooling Button / Temperature Button

Temperature setting
Press the Temperature button on the control panel to adjust the temperature from the warmest through the lower to the coldest level. Pressing the Temperature button, the temperature setting will change cyclically. At first plug-in of appliance temperature setpoint is present at medium position (factory setting). Following table shows temperature setpoints:

- ○ ○ ● High temp.
- ○ ● ● Med-high temp.
- ○ ● ○ Medium temp.
- ● ● ○ Med-low temp.
- ● ○ ○ Low temp.
- ● ● ● Super Cooling

🌡 • • • 🌡

○ OFF ● ON

Note: Displayed set points correspond to the average temperature throughout the whole refrigerator.

Super Cooling
The use of the Super Cooling function is recommended to increase the cooling capacity of the refrigerator compartment when placing a very high quantity of food within it.
To activate the Super Cooling function, press and hold for 3 seconds the Temperature button on the control panel till all the 3 LEDs will turn on.
The function is automatically deactivated after 24 hours and return to previous selected set point.

● ● ●

The function can be manually deactivated by pressing and holding for 3 seconds the Temperature button on the control panel.

Note: Super Cooling function should be also switched ON before placing fresh food to be frozen in the freezer compartment, in order to maximize the freezing capacity.

Fan*
The Fan improves temperature distribution inside the product, allowing better preservation of stored food.
By default, the fan is switched on. To turn off the fan press the button located on the bottom right corner of fan housing. If the ambient temperature exceeds 27°C, or if drops of water are present on the glass shelves, it is essential that the fan is on to ensure the proper preservation of the food. Deactivation of the fan allows energy consumption to be optimised. Please note that when the fan is switched on it will not continuously work. The fan will start/stop working depending on the temperature and/or humidity level inside the fridge.
If the appliance has the Fan it can be equipped with the antibacterial filter. Visit the website page or contact consumer service to purchase the filter.

* Available only on certain models

LED light

If the LED light system does not work, please contact the Service to replace it.

Important: The refrigerator compartment light switches on when the refrigerator door is opened. If the door is kept open for more than 8 minutes the light will be automatically switched off.

Humidity control *

Open the humidity regulator (position B) if you want to store food in a less humid environment like fruit, or close it (position A) to store food in a more humid environment like vegetable.

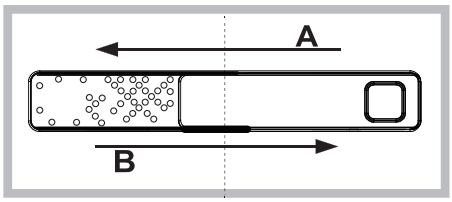

Tuck shelf *

Thanks to the rail system, this shelf allows you to slide under the front part, creating an extra space for storing tall bottles or pitchers.

Shelves

All shelves, flaps and pull-out baskets are removable.

Door

Door reversibility

Note: the direction of door opening can be changed. If this operation is performed by After-sales Service it is not covered by the warranty. Is recommended to reverse door swing by two persons. Follow instruction.

No-frost refrigerator compartment

Refrigerator compartment defrosting is completely automatic. Droplets of water on the rear wall inside the refrigerator compartment indicate that the automatic defrost phase is in progress.

The defrost water is automatically run into a drain hole and collected in a container, where it evaporates.

Defrosting the freezer compartment

The freezer should be defrosted once or twice a year or when excessive frost is present (3 mm thickness). The formation of frost is normal.

The amount and rate at which frost accumulates depends on room conditions and how often the door is open. To defrost the unit, switch off the product and take out all food.

Leave the freezer door open to allow the frost to melt.

Use the box under the bottom front of the appliance to collect water (showed on the figure).

Clean the inside of the freezer. Rinse and dry thoroughly.

Switch the appliance back on and store the food inside.



Stop frost accessory*

The STOP FROST accessory is designed to collect some of the frost that forms in the freezer compartment and it is easy to remove and clean, therefore reducing the time needed to defrost the inside of the freezer compartment.

* Available only on certain models

Procedure to clean the stop frost accessory *

- Open the freezer compartment door and remove the upper drawer (figure 2).

- Unfasten the STOP FROST accessory (figure 3) and remove it (figure 4), taking care not to drop it on the glass shelf below.

Note: if the accessory is jammed or difficult to remove, do not keep trying to remove it, but proceed with the complete defrost of the freezer compartment.

- Close the door to the freezer compartment.

- Remove the frost on the accessory by rinsing it under running (not hot) water (figure 5).

- Let the accessory drip dry and dry the plastic parts with a soft cloth.

- Reinsert the accessory by placing the back part on the projections shown in figure 7-A, then refasten the handle of the accessory to the clasps above (figure 7-B).

- Reinsert the upper drawer and close the door to the freezer compartment. It is possible to clean the STOP FROST accessory on its own without completely defrosting the freezer compartment. Cleaning the STOP FROST accessory regularly helps to reduce the need to completely defrost the freezer compartment.

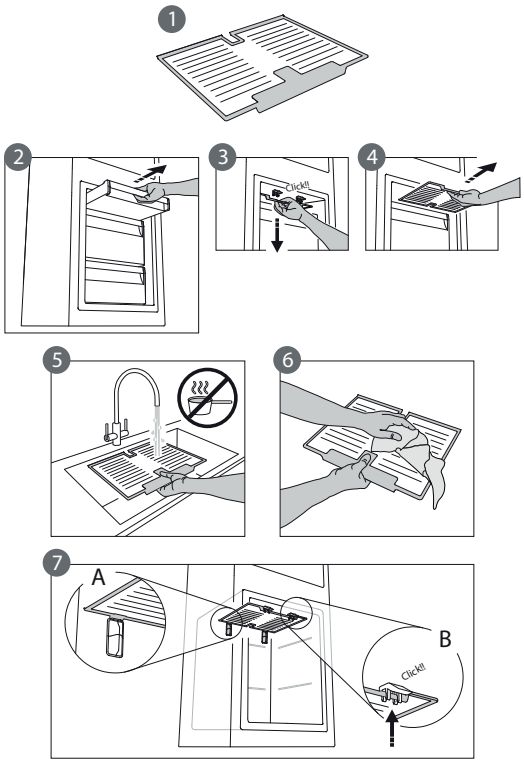

* Available only on certain models

Hotpoint

How to use the appliance

First time use

Wait at least two hours, after the installation, before connecting the appliance to the power supply. Connect the appliance to the power supply it starts the operation automatically. The ideal storage temperatures for the food are preset in the factory.

After turning the appliance on, you must wait for 4-6 hours for the correct storage temperature to be reached for a normally filled appliance.

Refrigerator compartment and food storage

The refrigerator compartment allows for the storage of fresh food and drink. The refrigerator compartment defrosts completely automatically. The occasional presence of drops of water on the internal back wall of the compartment is a sign of the automatic defrosting phase. The defrosting water is channelled into a drain and then collected in a container, where it evaporates.

Note: the ambient temperature, how often the doors are opened and the position of the appliance may affect the internal temperatures in the two compartments. Set the temperatures depending on these factors. In very humid conditions, condensation may form in the refrigerator compartment, especially on the glass shelves. In this case, it is recommended that you close containers with liquids in (e.g. a pot of stock), wrap up food with a high water content (e.g. vegetables) and turn on the fan, if there is one. All of the drawers, door shelves and shelves can be removed.

Air ventilation

The natural circulation of air in the refrigerator compartment results in zones with different temperatures. It is coldest directly above the fruits and vegetables crisper and at the rear wall. It is warmest at the top front of the compartment. Insufficient ventilation results in an increase in energy consumption and reduction of the refrigerating performance.

How to store fresh food and beverages

Foods which give off a large amount ethylene gas (apples, apricots, pears, peaches, avocado, figs, prunes, blueberries, mellons, beans) and those that are sensitive to this gas, such as fruit vegetables and salad, should always be separated or wrapped so as not to reduce the storage life; for example do not store tomatoes together with kiwi fruits or cabbage. Do not store food too close together to enable sufficient air circulation. Use recyclable plastic, metal, aluminum and glass containers and cling film to wrap foods. If you have a little quantity of food to store in the refrigerator, we recommend to use the shelves above the crisper for fruits and vegetables since this is the coolest area of the compartment. Always use closed containers for liquids and for food that may give off or be tainted by odor or flavor transfer or cover them. To avoid bottles falling over, you can use the bottle holder (available on selected models).

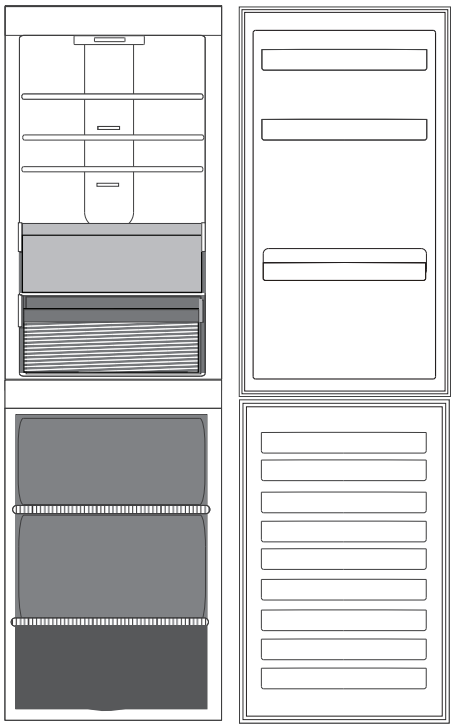

Legend



TEMPERATE ZONE

Suggested for storage of tropical fruit, cans, drinks, eggs, sauces, pickles, butter, jam

COOL ZONE

Suggested for the storage of cheese, milk, daily food, delicatessen, yogurt

Fruit & vegetable drawer

Freezer compartment food storage

The freezer compartment allows for the storage of frozen food (for the period indicated on the packaging) and the freezing of fresh food. The quantity of fresh food that can be frozen in 24 hours is written on the rating plate. Arrange the fresh food in the freezing area inside the freezer compartment, leaving enough space around the food packages to allow air to circulate freely. It is advisable that you do not re-freeze food that has partially defrosted. It is important to wrap the food in a way that prevents the ingress of water, humidity or condensation.

To get more volume, the freezer compartment can be used without the freezer drawers. Make sure that the door is closed properly.

Ice cubes

Fill 2/3 of the ice tray with water and put it back in the freezer compartment. Do not use sharp or pointed objects to remove the ice under any circumstances.

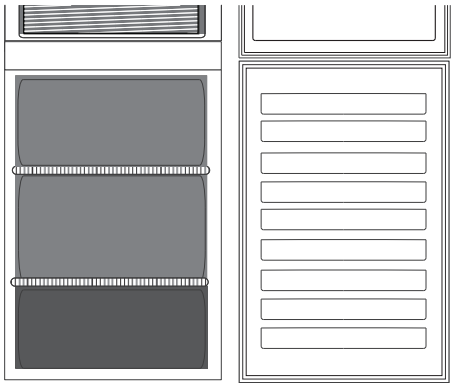

Legend

FREEZING ZONE DRAWER

(Max cool zone)

Suggested to freeze fresh / cooked food.

FREEZER DRAWERS

Removing the freezer drawer container

- Open the freezer door.
- Pull the upper container upwards by the right and left corners (1).
- Remove the drawer (2).
- Install the upper container in the reverse order.

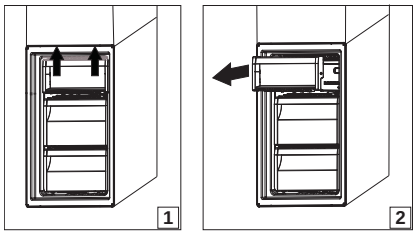

Tips for freezing and storing fresh food

- We recommend to label and date all your frozen food. Adding a label will help you to identify foods and to know when they should be used before their quality deteriorates.Do not re-freeze defrosted food.
- Before freezing, wrap and seal fresh food in: aluminium foil, cling film, air and water-tight plastic bags, polythene containers with lids or freezer containers suitable for freezing fresh food.
- Food must be fresh, mature and of prime quality in order to obtain high quality frozen food.
- Fresh vegetables and fruit should preferably be frozen as soon as they are picked to maintain the full original nutritional value, consistency, colour and flavor. Some meat, especially game, should be hung before it is frozen.
- Always leave hot food to cool before placing in the freezer.
- Eat fully or partially defrosted foods immediately. Do not refreeze unless the food is cooked after it has thawed. Once cooked, the thawed food can be refrozen.
- Do not freeze bottles with liquid.

Frozen food: shopping tips

When purchasing frozen food products:

- Ensure that the packaging is not damaged (frozen food in damaged packaging may have deteriorated). If the package is swollen or has damp patches, it may not have been stored under optimal conditions and defrosting may have already begun.
- When shopping, buy frozen foods at the end of your trip and transport them in a thermally insulated cool bag.
- Once at home, place the frozen foods immediately in the freezer.
- If food has defrosted even partially, do not refreeze it. Consume within 24 hours.
- Avoid or reduce temperature variations to the minimum. Respect the best-before date on the package.
- Always observe the storage information on the package.

Storage times for home frozen foods

Product	Storage period
Butter or margarine	6 months
Cheese	3 months
Fish Shellfish	2/3 months 1 month
Fruits (except citrus)	8-12 months
Ice cream or sherbet	2/3 months
Meat Ham- sausage Roasts (beef-pork- lamb) Steaks or chops (beef-lamb-pork)	 2 months 8/12 months 4 months
Milk, fresh fluid	1-3 months
Poultry (chicken-turkey)	5-7 months
Vegetables	8-12 months

Functional sounds

Sounds coming from your appliances are normal since it has a number of fans and engines to regulate performances that switch on and off automatically.

Some of the functional sounds can be reduced through:

- Leveling the appliance and installing it on an even surface.
- Separating and avoiding contact between the appliance and furniture.
- Checking if the internal components are correctly placed.
- Checking if bottles and containers are not in contactwith each other.

Some of the functional sounds you might hear

1. A hissing sound when switching on the appliance for the first time or after a long pause.



2. A gurgling sound when refrigerant fluid enters into the pipes.



3. BRRR sound is from the compressor running.



4. Buzzing sound when water valve or fan start working.



5. A cracking sound when compressor starts.



6. The CLICK is from the thermostat which adjusts how often the compressor is running.



Alarm table

Alarm type	Signal	Cause	Cure
Door open alarm	Refrigerator Light blinks.	The door has remained open for more than 5 minutes.	Close the door.
Door open alarm.	Refrigerator Light OFF.	The door has remained open for more than 8 minutes.	Close the door.
Malfunction.	Any temperature indicators blinks.	Product malfunction.	Contact the After-sales Service.

Recommendation in case of no use of the appliance

In the event of non-use of the applicance

Disconnect the appliance from the power supply, empty it, defrost it (if necessary) and clean it.

Keep the doors slightly ajar to let air circulate inside the compartments. By doing this, you avoid the development of mould and bad odours.

In the event of an interruption to the power supply

Keep the doors closed so the food stays cold for as long as possible. Do not re-freeze food that has partially defrosted. If there is a prolonged power cut, the black out alarm may also activate (in products with electronics).

Cleaning and maintenance

Before any cleaning or maintenance operation, unplug the appliance from the mains or disconnect the electrical power supply.
Never use abrasives. Never clean refrigerator parts with flammable fluids.
Do not use steam cleaners.
The buttons and control panel display must not be cleaned with alcohol or alcohol-derived substances, but with a dry cloth.

- Periodically clean the appliance with a cloth and a solution of lukewarm water and neutral detergent specifically for refrigerator interiors.
- Clean the outside of the appliance and the door seal with a damp cloth and dry with a soft cloth.
- Condenser placed in the rear of the appliance should be cleaned regularly using a vacuum cleaner.

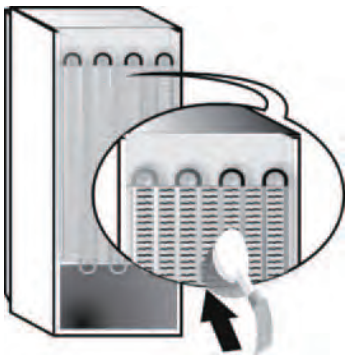

Important:

- The buttons and control panel display must not be cleaned with alcohol or alcohol-derived substances, but with a dry cloth.
- The refrigeration system pipes are located near the defrost pan and can become hot. Periodically clean them with a vacuum cleaner.

To ensure the constant and correct flow of the defrosting water, regularly clean the inside of the drain situated in the back wall of the refrigerator compartment near the fruit and vegetable drawer using the utensil provided.

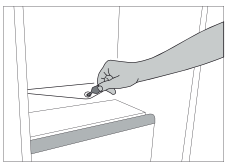

Troubleshooting

What to do if...	Possible reasons	Solutions
The appliance is not working.	There may be an appliance power supply problem.	• Check if power cable plugged into a live socket with the proper voltage. • Check if the protection devices and fuses of the electrical system in your home
There is water in the defrost pan.	This is normal in hot, damp weather. The pan can even be half full.	• Make sure the appliance is level so that the water does not overflow.
The edges of the appliance cabinet, which come in contact with the door seal, are warm to the touch.	This is not a defect. This is normal in hot weather and when the compressor is running.	
The light does not work.	The light may need replacing. The appliance may be in On/ Stand-by model.	• Make sure if the protection devices and fuses of the electrical system in your home work well. • Check if the power cable is plugged into a live socket with the proper voltage • In case the LEDs are broken the user must call the Service for exchange of the same type available only at our Aftersales Service Centers or authorized dealers.
The motor seems to run too much.	Motor running time depends on different things: number of door openings, amount of food stored, temperature of the room, setting of the temperature controls.	• Make sure that the appliance controls are correctly set. • Check if there is not a large amount of food been added to the appliance. • Check that the door is not opened too often. • Check that the door close properly.
The appliance temperature is too high.	There could be various causes (see “Solutions”).	• Make sure that the condenser (back the appliance) is free of dust and fluff. • Make sure that the door properly closed. • Make sure that the door seals properly fitted. • On hot days or if the room is warm, the motor naturally runs longer. • If the appliance door has been left open for a while or if large amounts of food have been stored, the motor will run longer in order to cool down the interior of the appliance.
The doors do not open and close properly.	There could be various causes (see “Solutions”).	• Check that food packages are not blocking the door. • Check that the internal parts or automatic ice maker are not out of position. • Check that the door seals are not dirty or sticky. • Ensure the appliance is level.

After-sales service

BEFORE CALLING THE AFTER-SALES SERVICE

1. See if you can solve the problem by yourself with the help of the suggestions given in the **TROUBLESHOOTING**.
2. Switch the appliance off and back on again to see if the fault persists.

IF AFTER THE ABOVE CHECKS THE FAULT STILL OCCURS, GET IN TOUCH WITH THE NEAREST AFTER-SALES SERVICE

To receive assistance, call the number shown on the warranty booklet or follow the instructions on the website

www.hotpoint.eu

When contacting our Client After sales service, always specify:

- a brief description of the fault;
- the type and exact model of the appliance;



- the service number (number after the word Service on the rating plate). The service number is also indicated on the guarantee booklet;
- your full address;
- your telephone number.



If any repairs are required, please contact an authorised aftersales service (to guarantee that original spare parts will be used and repairs carried out correctly).

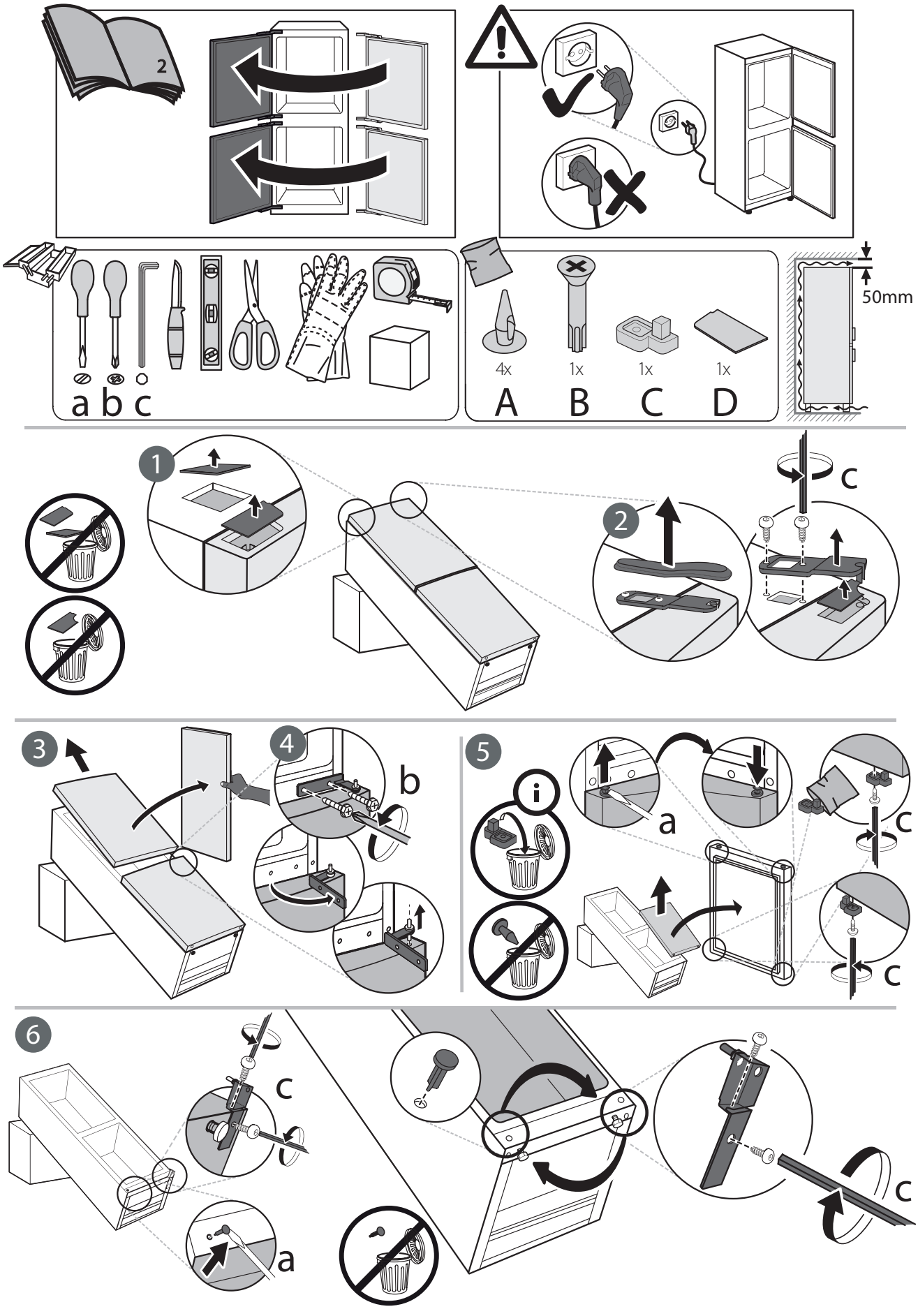

Hotpoint

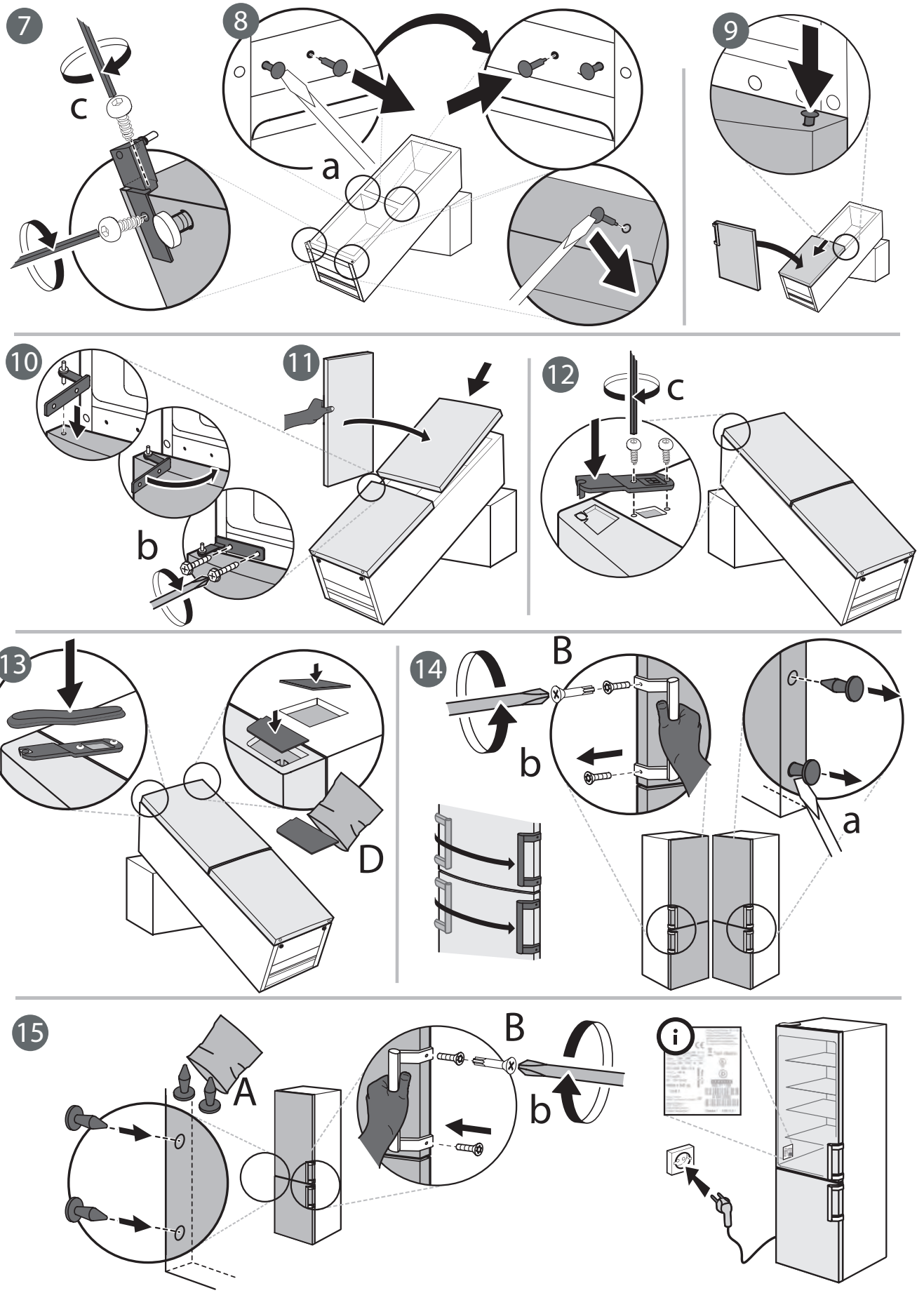
7
c
8
a
9
10
b
11
12
c
13
D
14
B
b
a
15
A
B
b

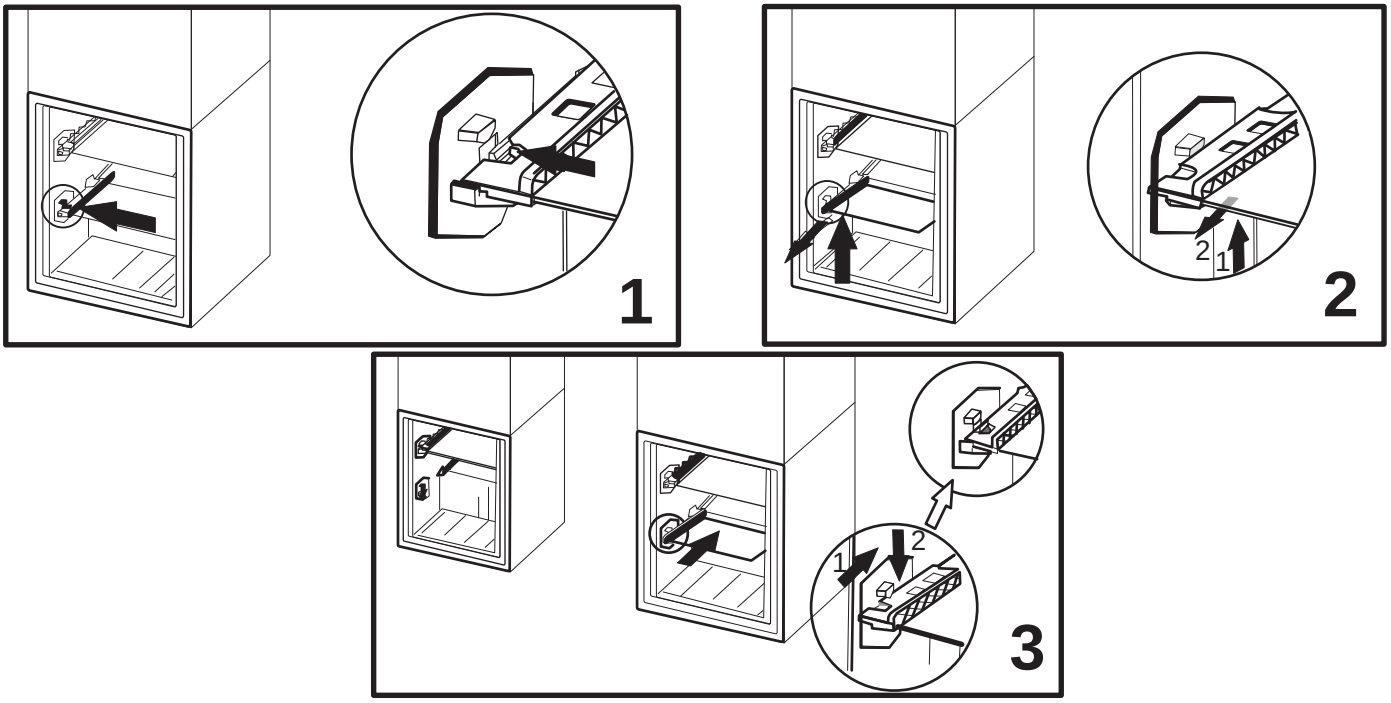

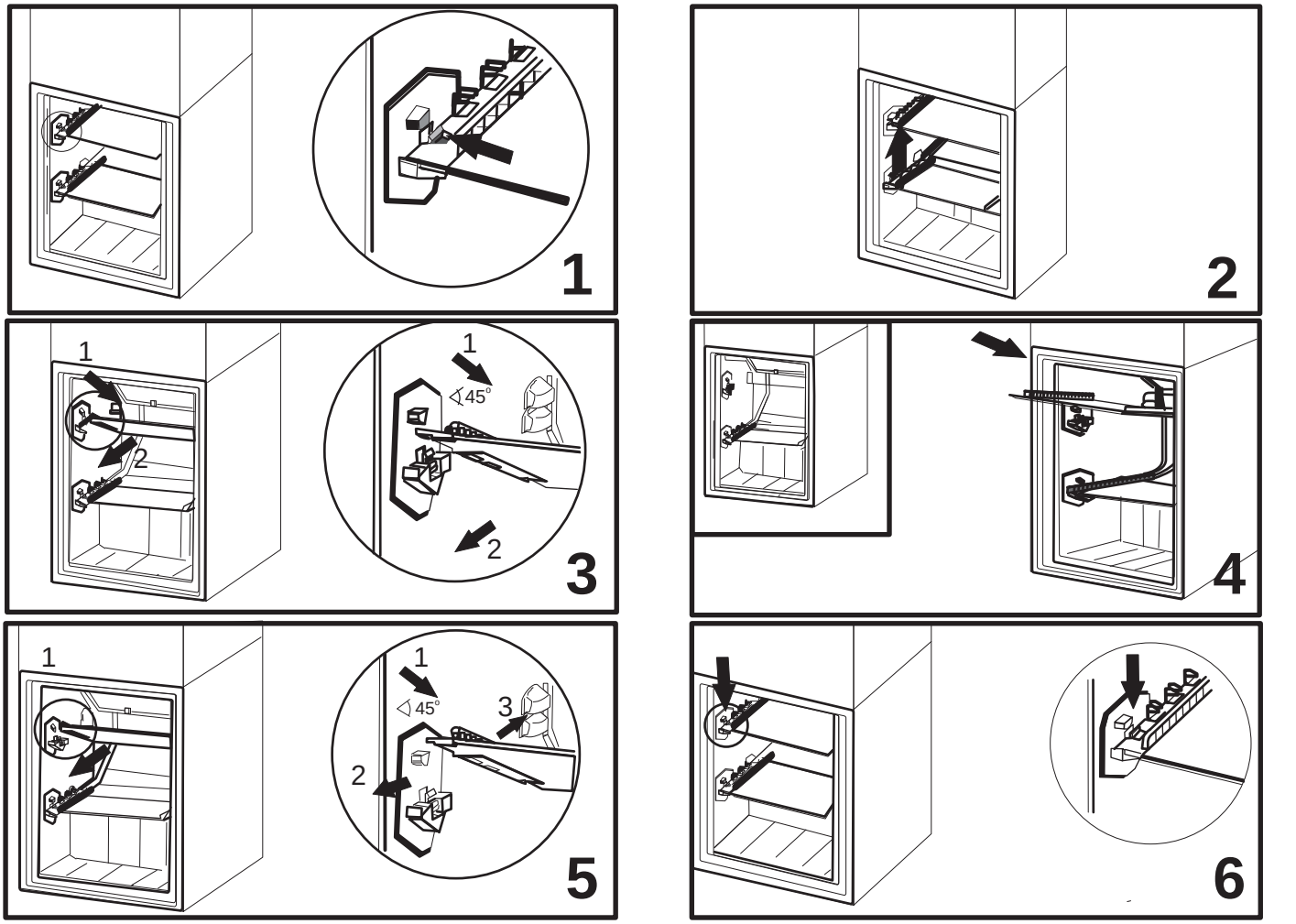

400011431476

Hotpoint